Build in EQ Function 8W Class- F Audio Amplifier With Boost Convertor Integrated

General Description

The LPA2163 is a Build in EQ Function 8W, class-F audio amplifier with boost convertor integrated. It offers low THD+N, allowing it to achieve high-quality Power Supply sound reproduction. The new filterless architecture allows the device to drive the speaker directly requiring no low-pass output filters, thus to save the system cost and PCB area. With high performance inductor and diode , the boost convertor can offer 2A output current for load. It can provide up to 6.5V stable DC voltage for amplifier so that it can display 5.7W output at 10% THD with a 4Ω load. When it provides 5.0V DC voltage, it can provide 3.4W output at 10% THD with a 4Ω load. The LPA2163 also can work at class-AB mode which make LPA2163 could apply to device with radio receiver. The other character of LPA2163 contact OCP、OTP and high noise suppression for FR signal. The LPA2163 is available in ESOP-16.

Order Information

LPA2163 □ □ □

- Package Type: ESOP-16
- F: Pb-Free

Applications

- ✧ Portable Bluetooth Speaker
- ✧ Cellular and Smart mobile phone
- ✧ Square Speaker

Features

- Build in EQ Function
- Integrated boost convertor
- Shut-down current:<3uA
- Output voltage Up to 5.0V/2.0A
- Internal Compensation
- Max duty cycle: 90%
- 500KHz fixed frequency switching for amplifier work at class_D mode and 1.2MHz for step up convertor
- P_{OUT} at 10% THD+N , V_{IN}=3.7V for boost convertor
  R_L=4Ω , P_{OUT}=4.8W , boost to 6.0V for amplifier
  R_L=2Ω , P_{OUT}=8W , boost to 6.0V for amplifier
- P_{OUT} at 1% THD+N , V_{IN}=3.7V for boost convertor
  R_L=4Ω , P_{OUT}=3.8W , boost to 6.0V for amplifier
  R_L=4Ω , P_{OUT}=6W , boost to 6.0V for amplifier
- Filterless, Low Quiescent Current and Low EMI
- Amplifier Efficiency up to 84%
- Excellent POP&CLICK rejection
- Short Circuit Protection, OCP, OTP
- Few External Components to Save the Space and cost
- Free LC filter digital modulation, direct-drive speakers
- Pb-Free Package

Marking Information

Device	Marking	Package	Shipping
LPA2163SPF	LPS LPA2163 YWX	ESOP-16	3K/REEL
Y: Y is year code. W: W is week code. X: X is series number.			

Typical Application Circuit

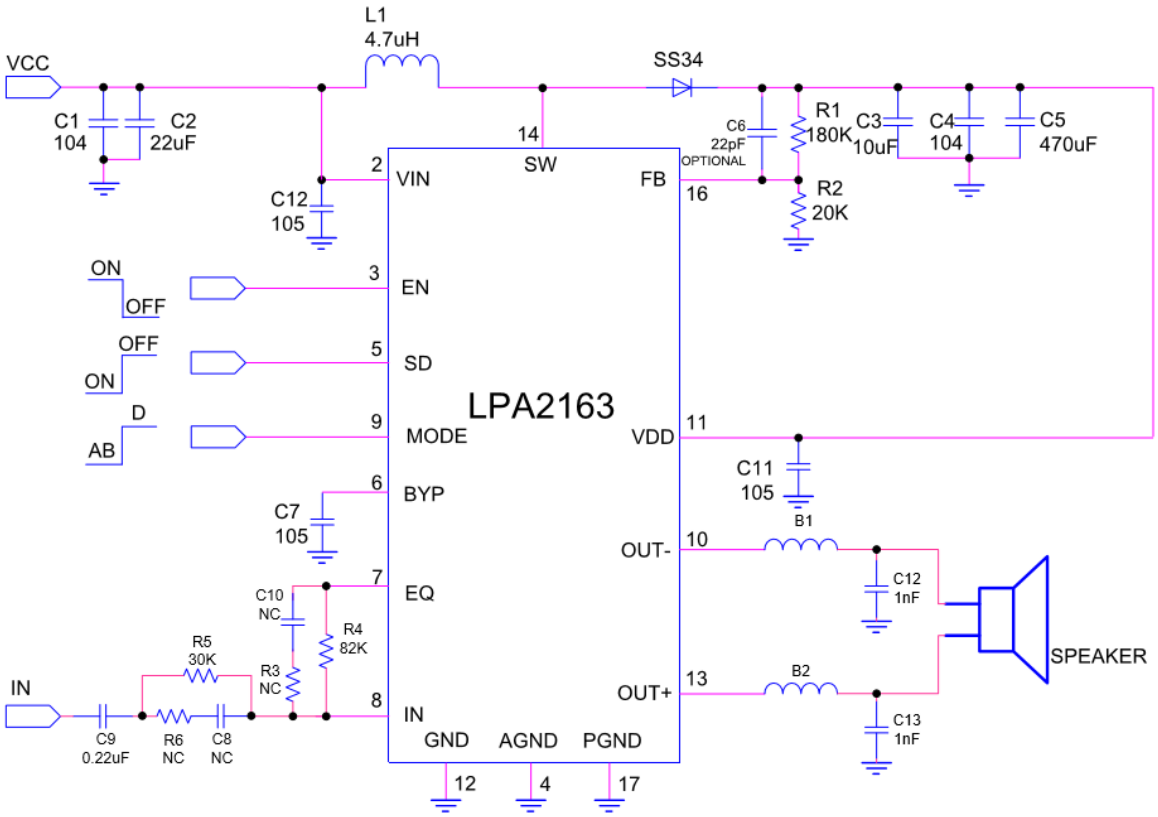

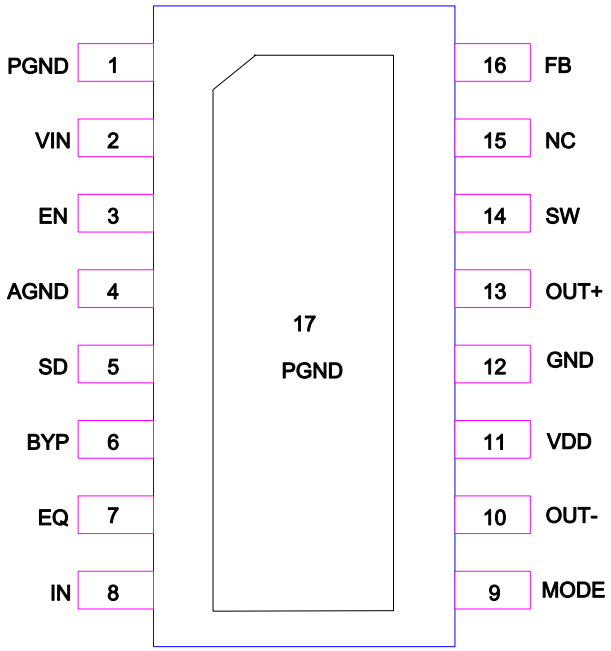

Functional Pin Description

Pin No.	PIN Name	DESCRIPTION
1,17	PGND	Power ground pin.
2	VIN	Power supply for boost convertor.
3	EN	Enable pin for boost convertor. Active high.
4	AGND	Analog power ground for boost convertor.
5	SD	Amplifier shutdown pin. Active high.
6	BYP	Bypass pin. Connect a 1uF capacitor to ground.
7	EQ	EQ pin of amplifier. With resistor (R3) and capacitor (C10) in series between IN and VEQ, the high frequencies could be attenuated.
8	IN	Input of amplifier. With resistor (R6) and capacitor(C8) in series between IN and signal, the low frequencies could be attenuated.
9	MODE	Class_AB and class_D mode switch pin. Choise class_D mode with high voltage.
10	OUT-	Negative output of amplifier.
11	VDD	Power supply for amplifier.
12	GND	Ground for amplifier.
13	OUT+	Positive output of amplifier.
14	SW	Switch pin for boost convertor.
15	NC	No connection.
16	FB	Feedback pin.

Classical Application 1: Low Restraint

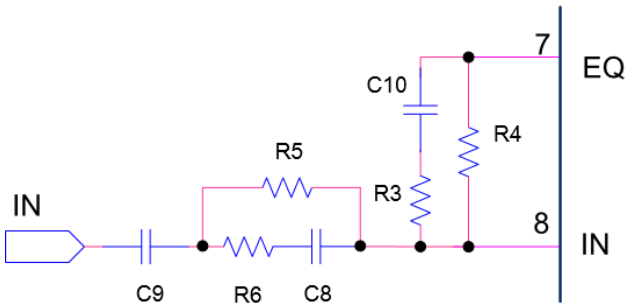

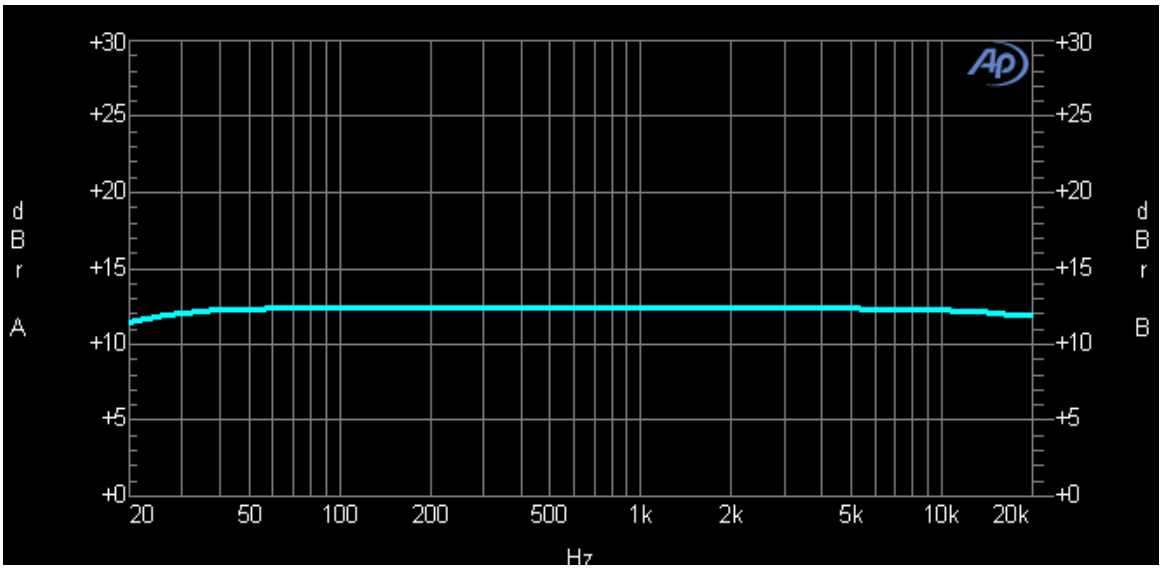

C9=0.22uF,R6=NC,C8=NC,R5=18kΩ,C10=NC,R3=NC,R4=33kΩ

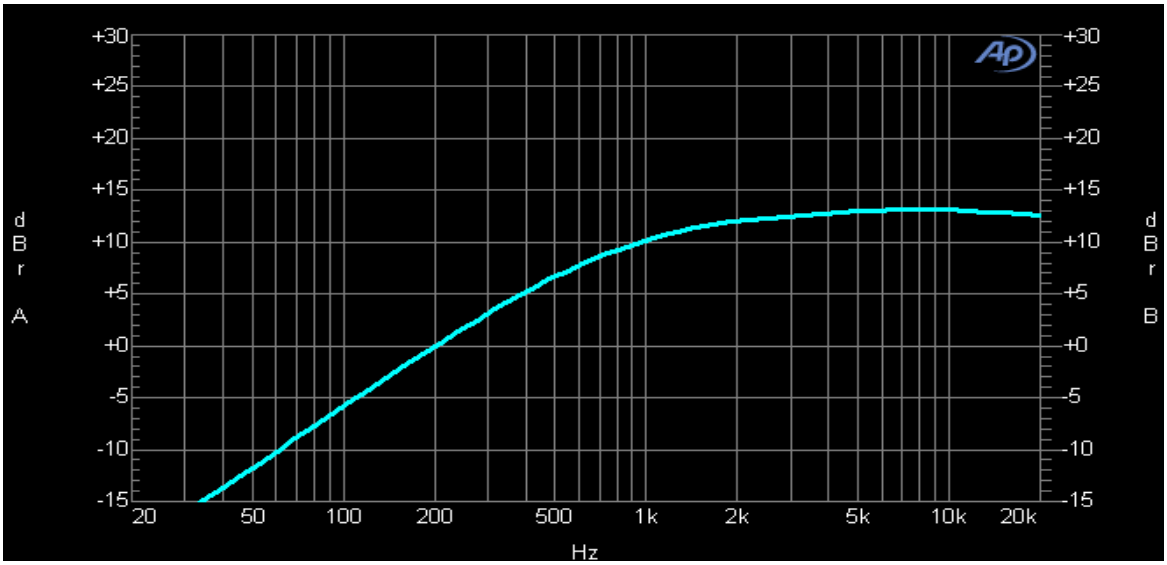

C9=0.1uF,R6=20kΩ,C8=10nF,R5=18kΩ,C10=NC,R3=NC,R4=47kΩ

Classical Application 2: High Restraint

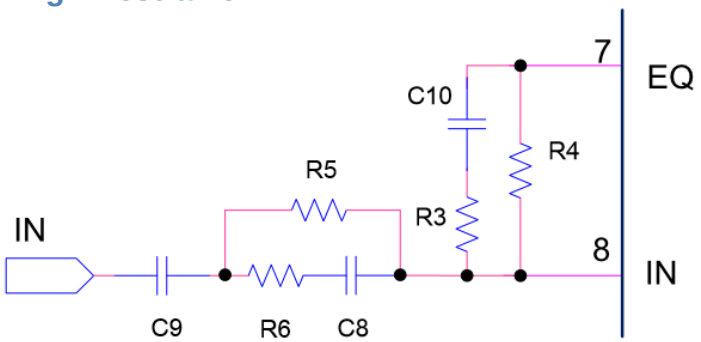

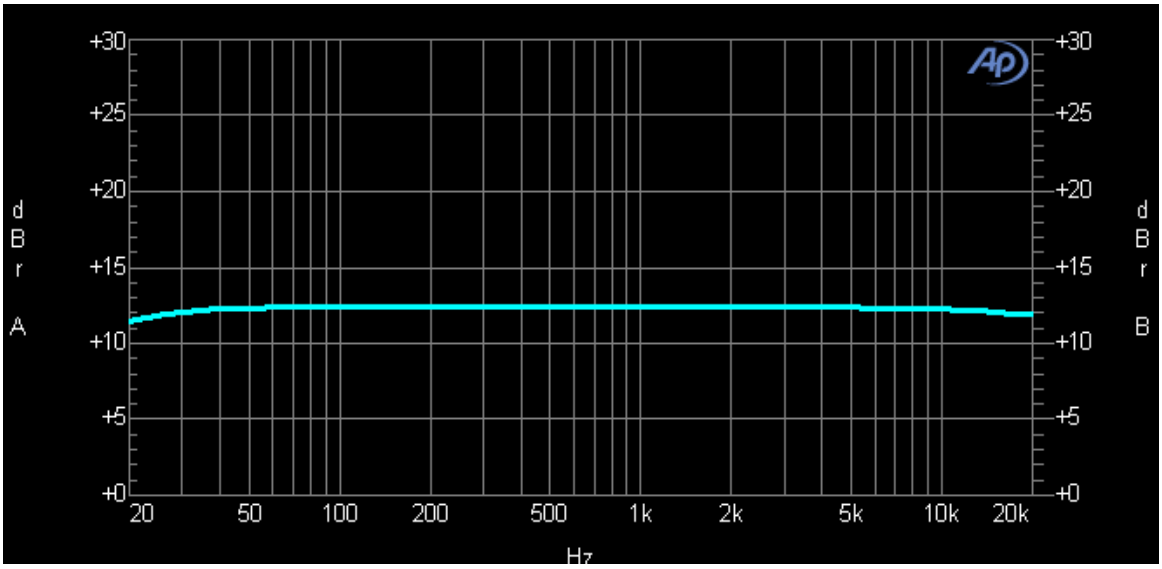

C9=0.22uF,R6=NC,C8=NC,R5=18kΩ,C10=NC,R3=NC,R4=33kΩ

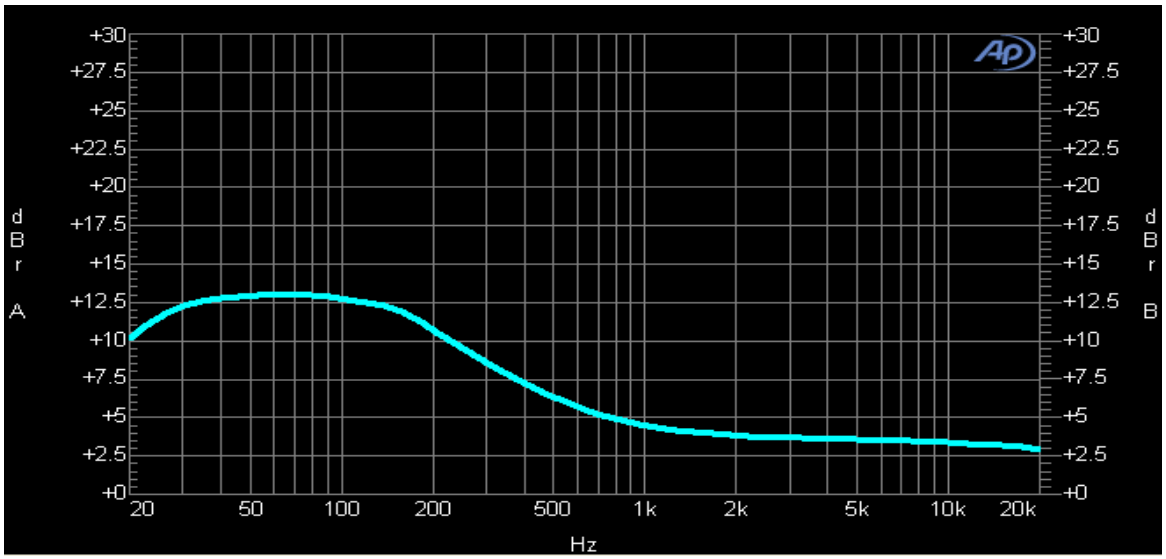

C9=1uF,R6=NC,C8=NC,R5=10kΩ,C10=33Nf,R3=10KΩ,R4=47KΩ

Classical Application 3: High and Low Restraint (Band Pass)

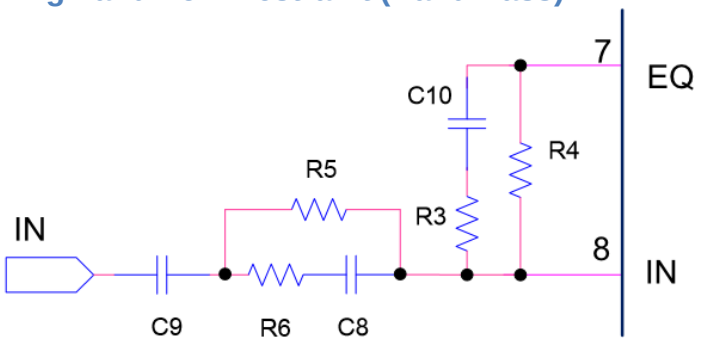

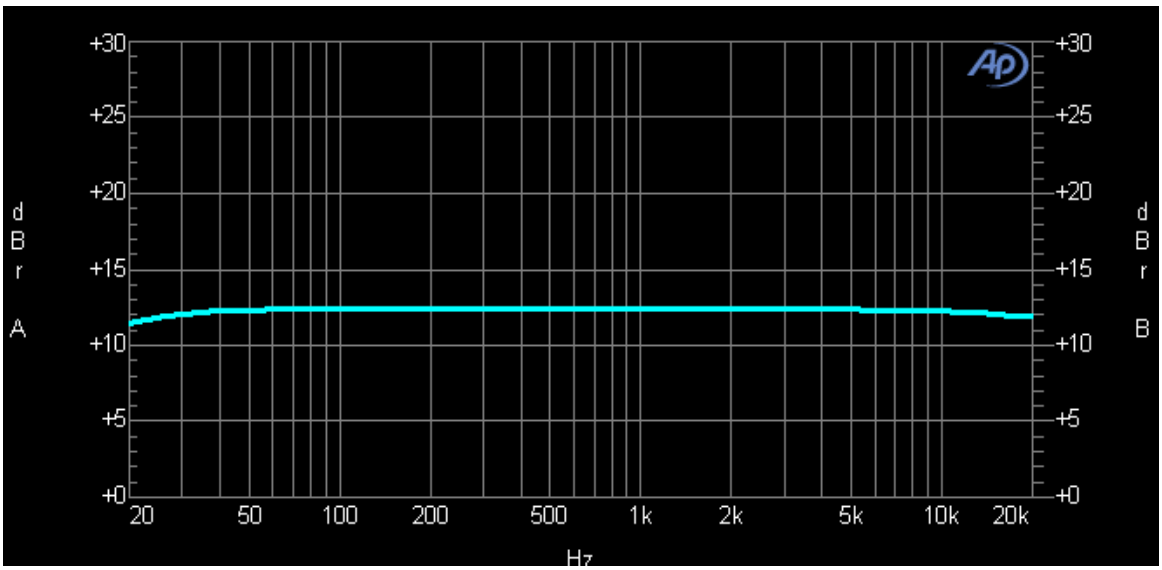

C9=0.22uF,R6=NC,C8=NC,R5=18kΩ,C10=NC,R3=NC,R4=33kΩ

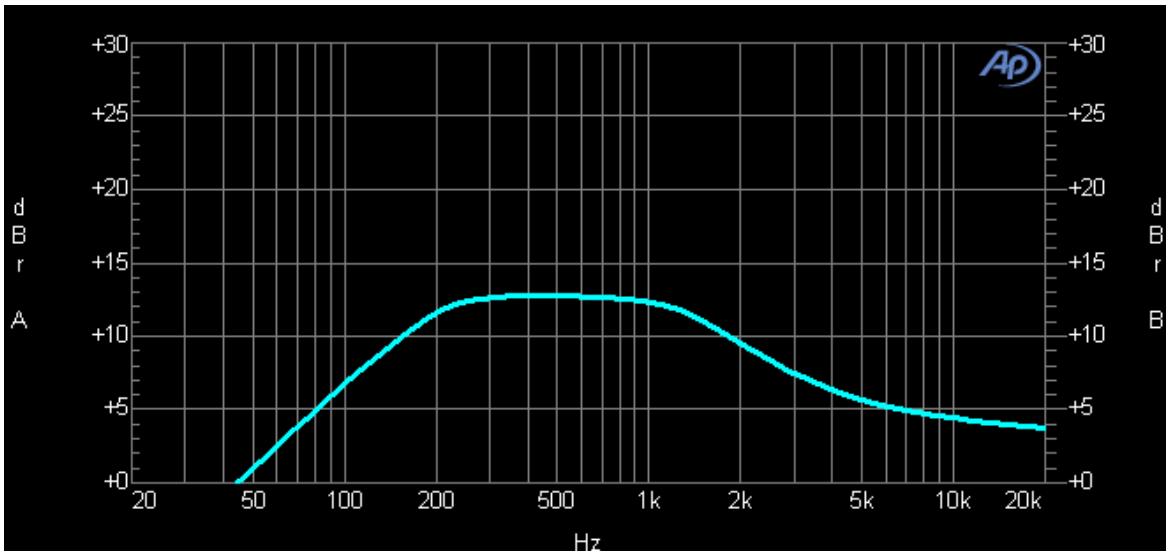

Absolute Maximum Ratings

- ✧ Supply voltage for boost convertor ---------- -0.3V to 6V
- ✧ Supply voltage for amplifier ---------- -0.3V to 6.5V
- ✧ Lead Temperature (Soldering, 10 sec.) ---------- 260°C
- ✧ Storage Temperature Range ---------- −65°C to 150°C
- ✧ Operation Junction Temperature Range ---------- −40°C to 125°C
- ✧ Operation Ambient Temperature Range---------- −40°C to 85°C
- ✧ Maximum Junction Temperature Range---------- 125°C

Recommended Operating Conditions

- ✧ Supply voltage for boost convertor ---------- 2.5V to 5.0V
- ✧ Supply voltage for amplifier ---------- 2.5V to 6.0V

Thermal Information

Parameter	Symbol	Package	Maximum	Unit
Thermal resistance (junction to ambient)	θ_{JA}	ESOP16	65	℃/W
Thermal resistance (junction to case)	θ_{JC}	ESOP16	23	℃/W

Electrical Characteristics For Amplifier

(T_A = 25° C, unless otherwise specified)

Parameter	Symbol	Test Conditions		Min	Typ		Max	Units
					Class-D	Class-AB		
Supply power	VIN			2.5			6.0	V
Output power	P_O	THD+N=10%, f=1kHz,RL=4Ω	VDD=6.0V		4.8	4.7		W
			VDD=5.0V		3.2	3.2		
		THD+N=10%, f=1kHz,RL=3Ω	VDD=6.0V		6.0	5.9		
			VDD=5.0V		3.8	3.7		
		THD+N=10%, f=1kHz,RL=2Ω	VDD=6.0V		8.0	7.9		
			VDD=5.0V		5	5		
		THD+N=1%, f=1kHz,RL=4Ω	VDD=6.0V		3.8	3.7		
			VDD=5.0V		2.5	2.6		
		THD+N=1%, f=1kHz,RL=3Ω	VDD=6.0V		4.8	4.7		
			VDD=5.0V		3.1	3.2		
		THD+N=1%, f=1kHz,RL=2Ω	VDD=6.0V		6.1	6.0		
			VDD=5.0V		4	4		
Power supply ripple rejection	PSRR	INPUT ac-grounded with CIN=0.47uF, VDD=6.0V	f=100HZ		-75			dB
			f=1kHz		-50			
Signal-to-noise ratio	SNR	V_{DD}=5V,P_{OUT}=0.5W, R_L=2Ω	f=1kHz		-90	-91		dB
Eifficency	η	R_L=4Ω,P_O=0.6W	f=1kHz		84			%
Quiescent current	I_Q	V_{DD}=5.0V	No load		4.65	7		mA
Shutdown current	I_{SD}				2			uA
Offset output voltage	V_{OS}	VDD=5.0V, V_{SD} =0V			1.1	2		mV
Frequency for class_D	fsw				500			kHz

Electrical Characteristics For Boost Convertor

(V_{IN}=3.6V,V_{OUT}=5V,C_{IN}=22uF,C_{OUT}=22uF//10uF,L=2.2uH)

Parameter	Conditions	Boost of LPA2163			Units
		Min	Typ	Max	
Supply Voltage		2.2		5.5	V
Output Voltage Range		2.5		6.5	V
Supply Current(Shutdown)	V_{EN}=V_{OUT}=0V, V_{IN}=5V			1	uA
Supply Current	V_{EN}=V_{IN}=3.6V, V_{FB}=0.6V			150	uA
Feedback Voltage		0.588	0.6	0.612	V
Feedback Input Current	V_{FB}=0.6V			50	nA
Switching Frequency			1200		kHz
Maximum Duty Cycle			90		%
EN Input Low Voltage				0.4	V
EN Input High Voltage		1.4			V
Limit current of power MOSFET			6		A
$R_{DS(ON)}$	V_{OUT}=3.3V		100		mΩ

Typical Operating Characteristic For Amplifier

Audio Precision

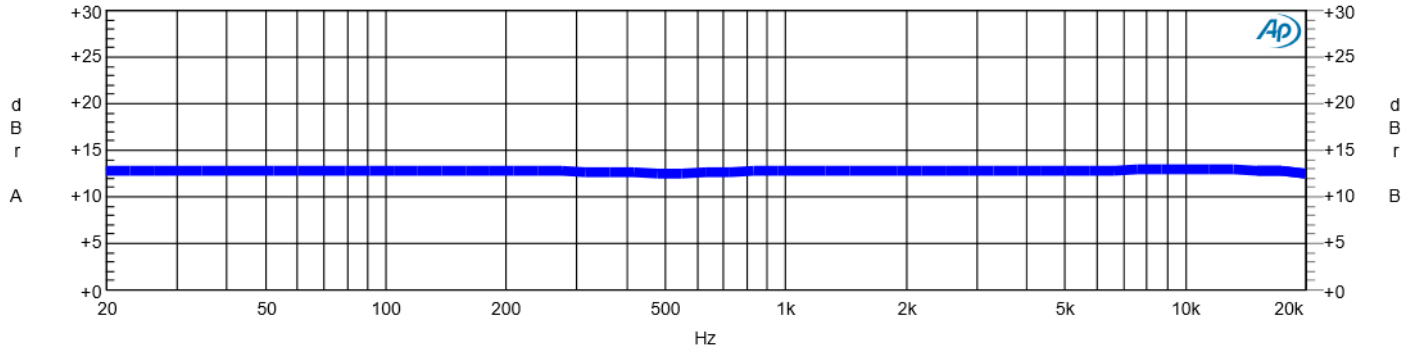

Sweep	Trace	Color	Line Style	Thick	Data	Axis	Comment
1	1	Cyan	Solid	1	Analyzer.Level A	Left	
1	2	Blue	Solid	7	Analyzer.Level B	Right	

Rapid (<2 seconds) frequency response measurement.
Can be even faster if the lowest frequencies are not included.
Press F4 to set the 1kHz dbr A and dBr B reference.
Optimize for a detailed view.

A-A FREQ RESP FAST @ 4ohm PO=4.8W CLASS AB VDD=6V.ats2

Audio Precision

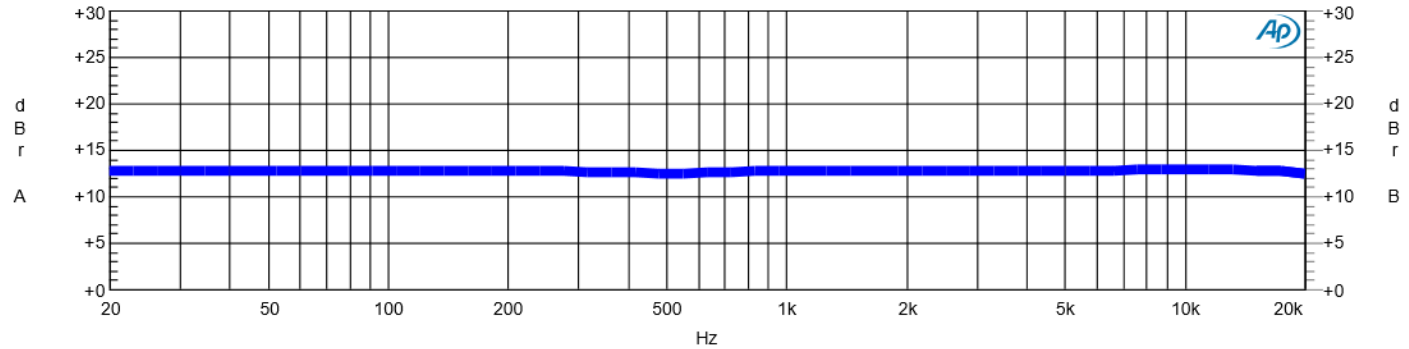

Sweep	Trace	Color	Line Style	Thick	Data	Axis	Comment
1	1	Cyan	Solid	1	Analyzer.Level A	Left	
1	2	Blue	Solid	7	Analyzer.Level B	Right	

Rapid (<2 seconds) frequency response measurement.
Can be even faster if the lowest frequencies are not included.
Press F4 to set the 1kHz dbr A and dBr B reference.
Optimize for a detailed view.

A-A FREQ RESP FAST @ 4ohm PO=4.8W CLASS D VDD=6V.ats2

Audio Precision A-A THD+N vs FREQUENCY

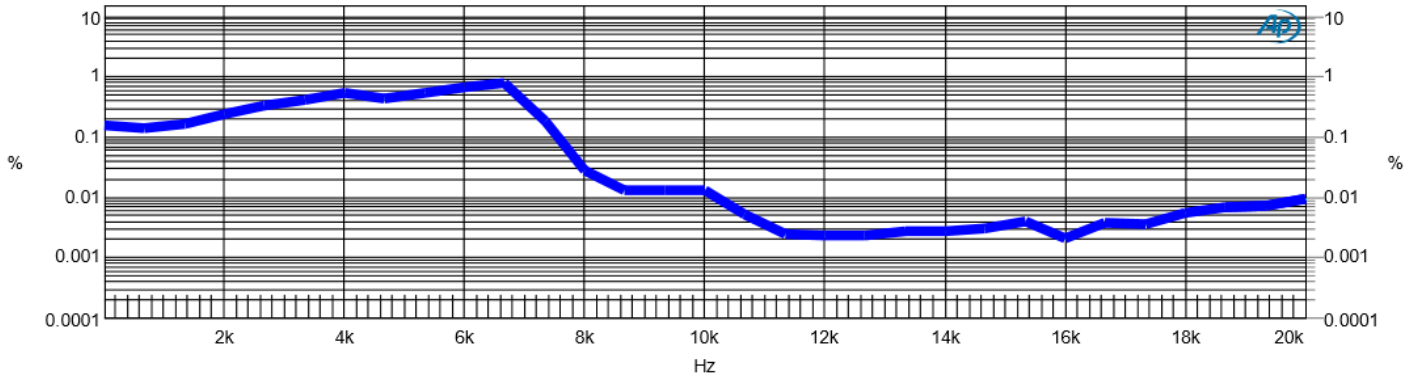

Sweep	Trace	Color	Line Style	Thick	Data	Axis	Comment
1	1	Cyan	Solid	1	Analyzer.THD+N Ratio B	Left	
1	2	Blue	Solid	7	Analyzer.THD+N Ratio B	Right	

A single sweeps produces a stereo THD+N sweep of Ch A and Ch B when data 1 is set for THD+N and the Stereo box is checked. The upper Analyzer bandwidth is 20kHz. At a 6kHz fundamental only the 2nd and 3rd harmonics are included, above 10kHz only the noise is included in the measurement bandwidth. For band-limited systems IMD testing is better.

A-A THD+N VS FREQ @4ohm PO=3W CLASS AB VDD=6V.ats2

Audio Precision A-A THD+N vs FREQUENCY

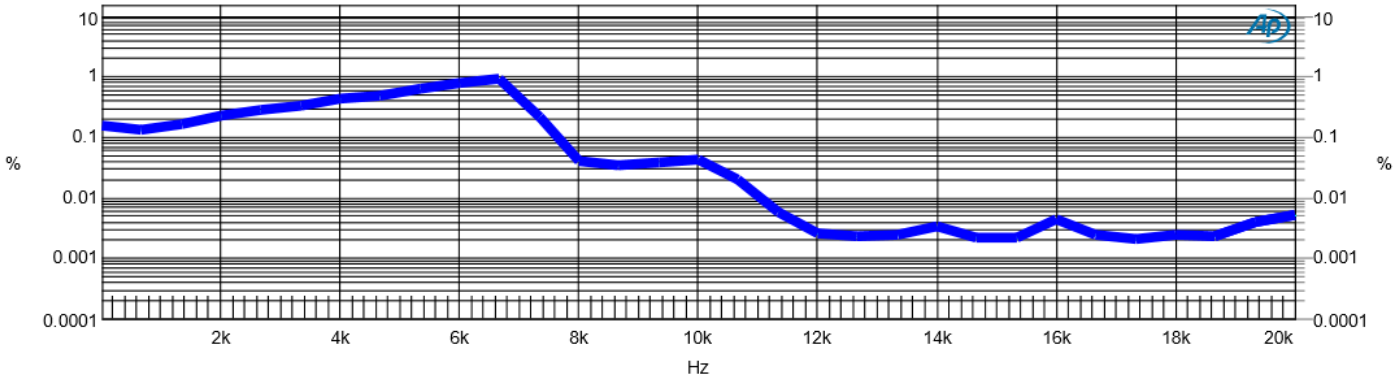

Sweep	Trace	Color	Line Style	Thick	Data	Axis	Comment
1	1	Cyan	Solid	1	Analyzer.THD+N Ratio B	Left	
1	2	Blue	Solid	7	Analyzer.THD+N Ratio B	Right	

A single sweeps produces a stereo THD+N sweep of Ch A and Ch B when data 1 is set for THD+N and the Stereo box is checked. The upper Analyzer bandwidth is 20kHz. At a 6kHz fundamental only the 2nd and 3rd harmonics are included, above 10kHz only the noise is included in the measurement bandwidth. For band-limited systems IMD testing is better.

A-A THD+N VS FREQ @4ohm PO=3W CLASS D VDD=6V.ats2

Audio Precision

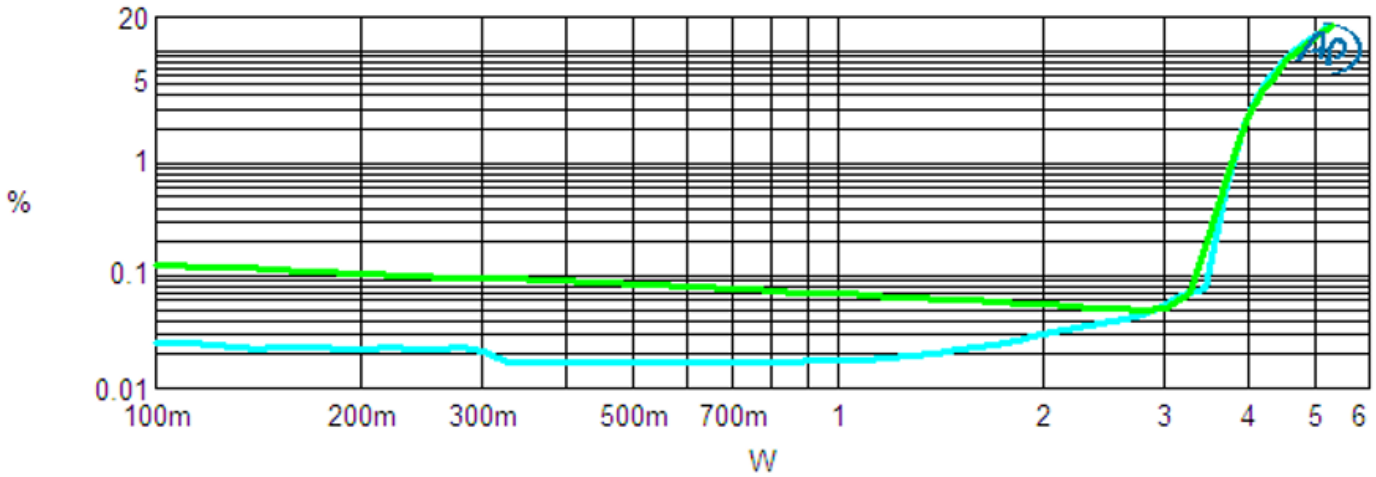

Sweep	Trace	Color	Line Style	Thick	Data	Axis	Comment
1	1	Cyan	Solid	3	Analyzer.THD+N Ratio A	Left	6V 4ohm Class D
2	1	Green	Solid	3	Analyzer.THD+N Ratio A	Left	6V 4ohm Class AB

Audio Precision

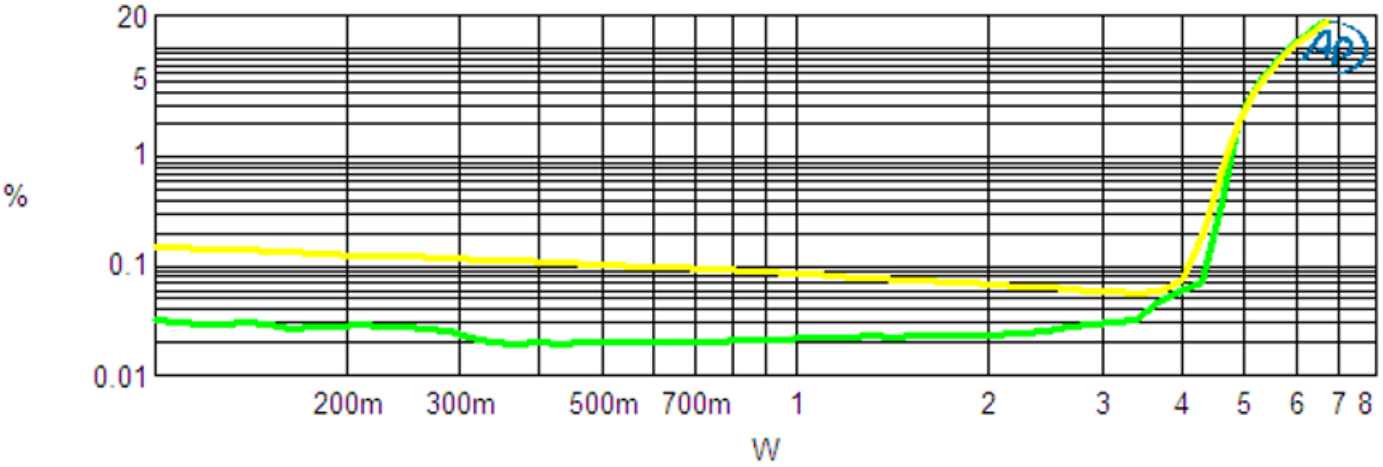

Sweep	Trace	Color	Line Style	Thick	Data	Axis	Comment
1	1	Green	Solid	3	Analyzer.THD+N Ratio A	Left	6V 3ohm Class D
2	1	Yellow	Solid	3	Analyzer.THD+N Ratio A	Left	6V 3ohm Class AB

Audio Precision

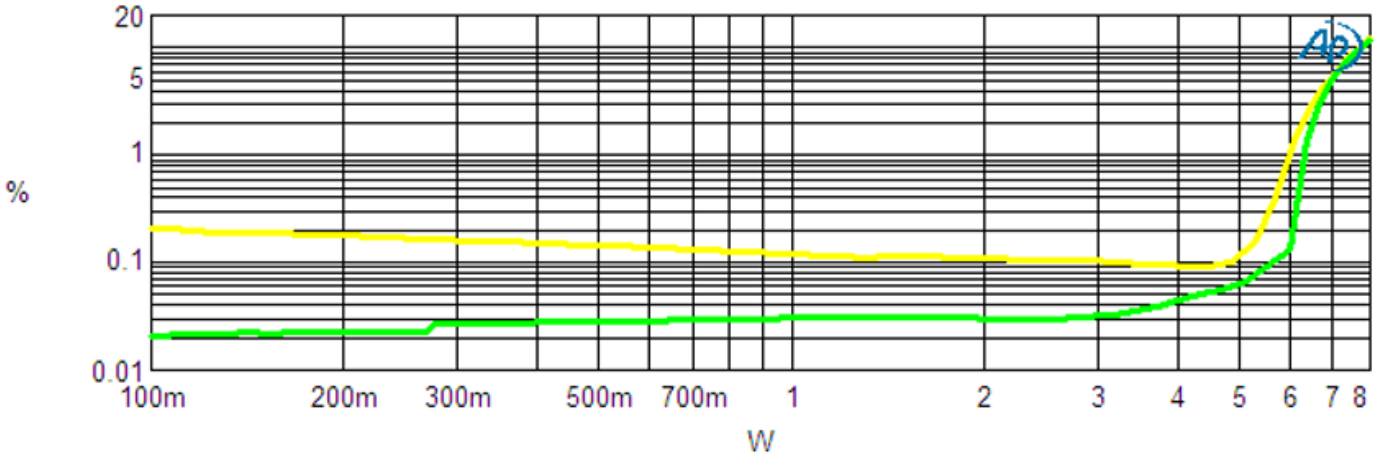

Sweep	Trace	Color	Line Style	Thick	Data	Axis	Comment
1	1	Green	Solid	3	Analyzer.THD+N Ratio A	Left	6V 2ohm Class D
2	1	Yellow	Solid	3	Analyzer.THD+N Ratio A	Left	6V 2ohm Class AB

Typical Operating Characteristic For Boost Convertor

Vin=3.3V Vout=5V, 0mA

Vin=3.3V Vout=5V, 50mA

Vin=3.3V Vout=5V, 100mA

Vin=3.3V Vout=5V, 2A

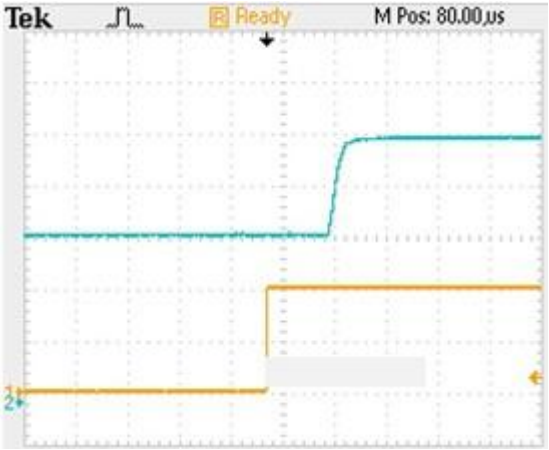

Start up wave

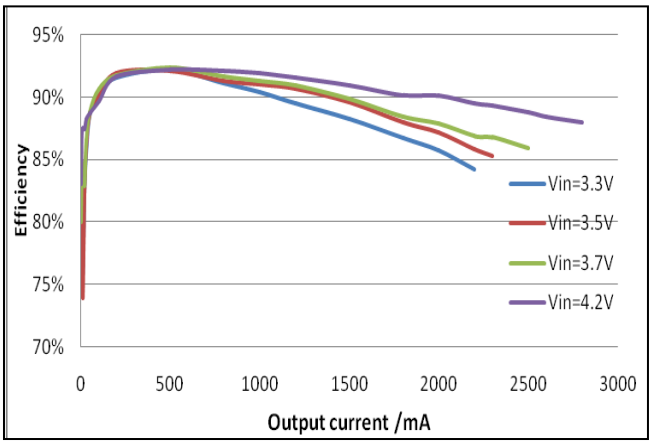

Efficiency VS. Output current

Applications Information(for Amplifier)

Maximum Gain

The LPA2163 has two internal amplifier stages. The first stage's gain is externally configurable, while the second stage's is internally fixed. The closed-loop gain of the first stage is set by selecting the ratio of R4 to R5 while the second stage's gain is fixed at 1.5x.The output of amplifier serves as the input to amplifier 2, thus the two amplifiers produce signals identical in magnitude, but different in phase by 180°. Consequently, the differential gain for the IC is: Av=2*1.5*R4 / R5 (for class_AB & class_D)

Shutdown operation

In order to reduce power consumption while not in use, the LPA2163 contains shutdown circuitry to turn off the amplifier's bias circuitry. This shutdown feature turns the amplifier off when logic high is applied to the SD pin. By switching the SD pin connected to high voltage, the LPA2163 supply current draw will be minimized in idle mode.

Power supply decoupling

The LPA2163 is a high performance CMOS audio amplifier that requires adequate power supply decoupling to ensure the output THD and PSRR a low as possible. Power supply decoupling affects low frequency response. Optimum decoupling is achieved by using two capacitors of different types targeting to different types of noise on the power supply leads. For higher frequency transients, spikes, or digital hash on the line, a good low equivalent-series-resistance (ESR) ceramic capacitor, typically 1.0μF, works best, placing it as close as possible to the device VDD terminal. For filtering lower- frequency noise signals, a large capacitor of 20μF (ceramic) or greater is recommended, placing it near the audio power amplifier.

Signal Frequency suppress

The LPA2163 has a EQ pin which is the negative output of amplifier as show below. With R3 and C10, we can suppress high frequency part of signal. And the low frequency part of signal could be attenuated by R6 and C8.

$$f_H = \frac{1}{2\pi R_6 C_8};$$

$$f_L = \frac{1}{2\pi R_3 C_{10}};$$

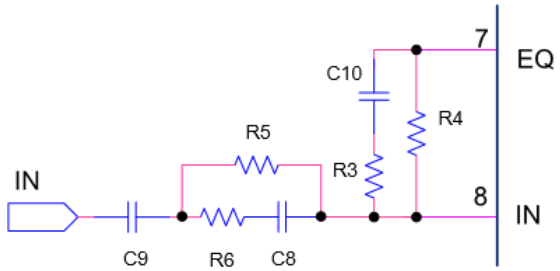

Over Temperature Protection

Thermal protection on the LPA2163 prevents the device from damage when the internal die temperature exceeds 150℃. There is a 15 degree tolerance on this trip point from device to device. Once the die temperature exceeds the thermal set point, the device outputs are disabled. This is not a latched fault. The thermal fault is cleared once the temperature of the die is reduced by 30℃. This large hysteresis will prevent motor boating sound well and the device begins normal operation at this point without external system intervention.

Analog Reference Bypass Capacitor (C_{BYP})

In addition to system cost and size, click and pop performance is affected by the size of the input coupling capacitor, C_{BYP}. A larger input coupling capacitor requires more charge to reach its quiescent DC voltage (nominally 1/2 VDD). This charge comes

from the internal circuit via the feedback and is apt to create pops upon device enable. Thus, by minimizing the capacitor size based on necessary low frequency response, turn-on pops can be minimized.

The Analog Reference Bypass Capacitor (C_{BYP}) is the most critical capacitor and serves several important functions. During start-up or recovery from shutdown mode, C_{BYP} determines the rate at which the amplifier starts up. The second function is to reduce noise caused by the power supply coupling into the output drive signal. This noise is from the internal analog reference to the amplifier, which appears as degraded PSRR and THD+N.

How to reduce EMI

A simple solution is to put an additional capacitor 220pF at power supply terminal for power line. The traces from amplifier to speakers should design as short as we can.

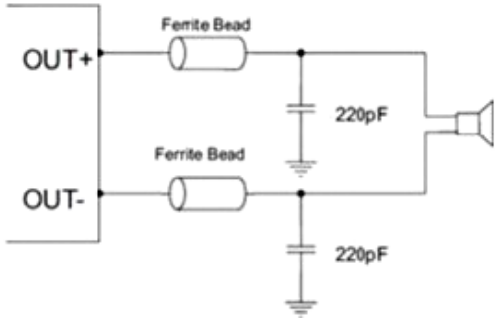

Applications Information(for Boost)

The LP2163 integrates a 1200KHz fixed frequency, current-mode regulation architecture to regulate the boost convertor output voltage. The LP2163 measures the output voltage through an external resistive voltage divider and compares that to the internal 0.6V reference to generate the error voltage to the inductor current to regulate the output voltage. The use of current-mode regulation improves transient response and control loop stability.

When the boost convertor is disabled (EN=Low), both power switches are off. There is no current path from SW to OUT. Therefore, the output voltage discharges to ground. When the boost convertor is enabled (EN=High), a limited start-current charges the output voltage rising to SW, then TH part operates in force PWM mode for regulating the output voltage to the target value. At the beginning of each cycle, the N-channel MOSFET switch is turned on, forcing the inductor current to rise. The current at the source of the switch is internally measured and converted to a voltage by the current sense amplifier. That voltage is compared to the error voltage. When the inductor current rises sufficiently, the PWM comparator turns off the switch, forcing the inductor current to the output capacitor which forces the inductor current to decrease. The peak inductor current is controlled by the error voltage. Thus the output voltage controls the inductor current to satisfy the lode.

Setting the Output Voltage

Set the output voltage by selecting the resistive voltage divider ratio. The voltage divider drops the output voltage to the 0.6V feedback voltage. Use a 100K resistor for R2 of the voltage divider. Determine the high-side resistor R1 by the equation:

$$V_{out}=(R1/R2+1) \times V_{FB}$$

$$V_{out}=(R1/R2+1) \times 0.6V$$

PCB Layout notices

1, In the path of the power supply, plus a 1uF and a 10uF to ground high-frequency filter capacitor. These caps can be connected to the thermal pad directly for an excellent ground connection. Consider adding a small, good quality low ESR ceramic capacitor may achieve better sound effects.

2, Large (470 μF or greater) bulk power supply decoupling capacitors should be placed near the LPA2163 on the VDD supplies. Local, high-frequency bypass capacitors should be placed as close to the VDD pins as possible.

3, The power line, ground line and filter capacitor and bypass capacitors as close to the chip's pins, remember not to put the capacitor on the back of the board, through tiny holes through the jumper even over. Keep the current loop from each of the outputs through the ferrite bead and the small filter cap and back to PGND as small and tight as possible. The size of this current loop determines its effectiveness as an antenna.

4, Power, ground, and a large current line must try to be wide enough, if you want to add vias, the number of through-holes must be at least 6. The thermal pad must be soldered to the PCB for proper thermal performance and optimal reliability.

5, GND and VDD should be put independently, high-power signals to avoid interference.

6, If you want to pursue as large as the effect of power, a large selection of speakers or sound chamber with low resistance (such as 3.6Ω) speakers, or added to improve the supply voltage boost circuit.

7, Including the line between large current cell and chip, the inductor should be as close and short as possible to chip for a high performance. Adding a coil to this pin would be helpful for EMI certification. If there is a high standards needed in LPA2163 application, we could add a coil and capacitor between chip and speaker constituting a LC filter which coil would be 100MHz, 100~150Ω and its DCI beyond 3A placing as close as possible to chip, the capacitor should be 1nF connecting the PGND.

8, The position under the amplifier chip on the board must be added vents and large areas of exposed copper and tin to enhance heat dissipation.

9, In case of fixed gain and meeting demand, it should make CIN small as possible as we can because it constitute a high through filter with Rin which cutoff frequency is 1/2*3.414*Cin*Rin. A high capacitance cap could make POP worse.

PCB LAYOUT (LPA2163SPF+LPA2173SPF)

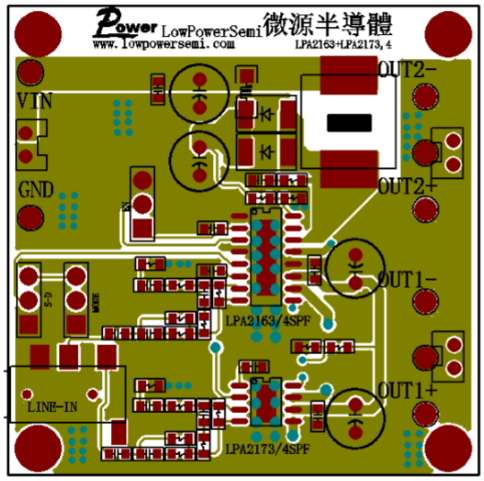

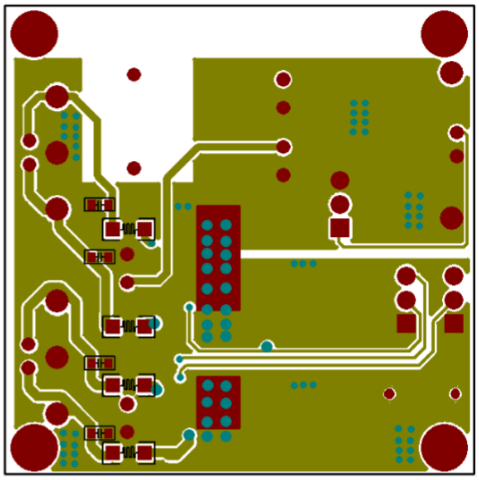

Packaging Information

ESOP-16

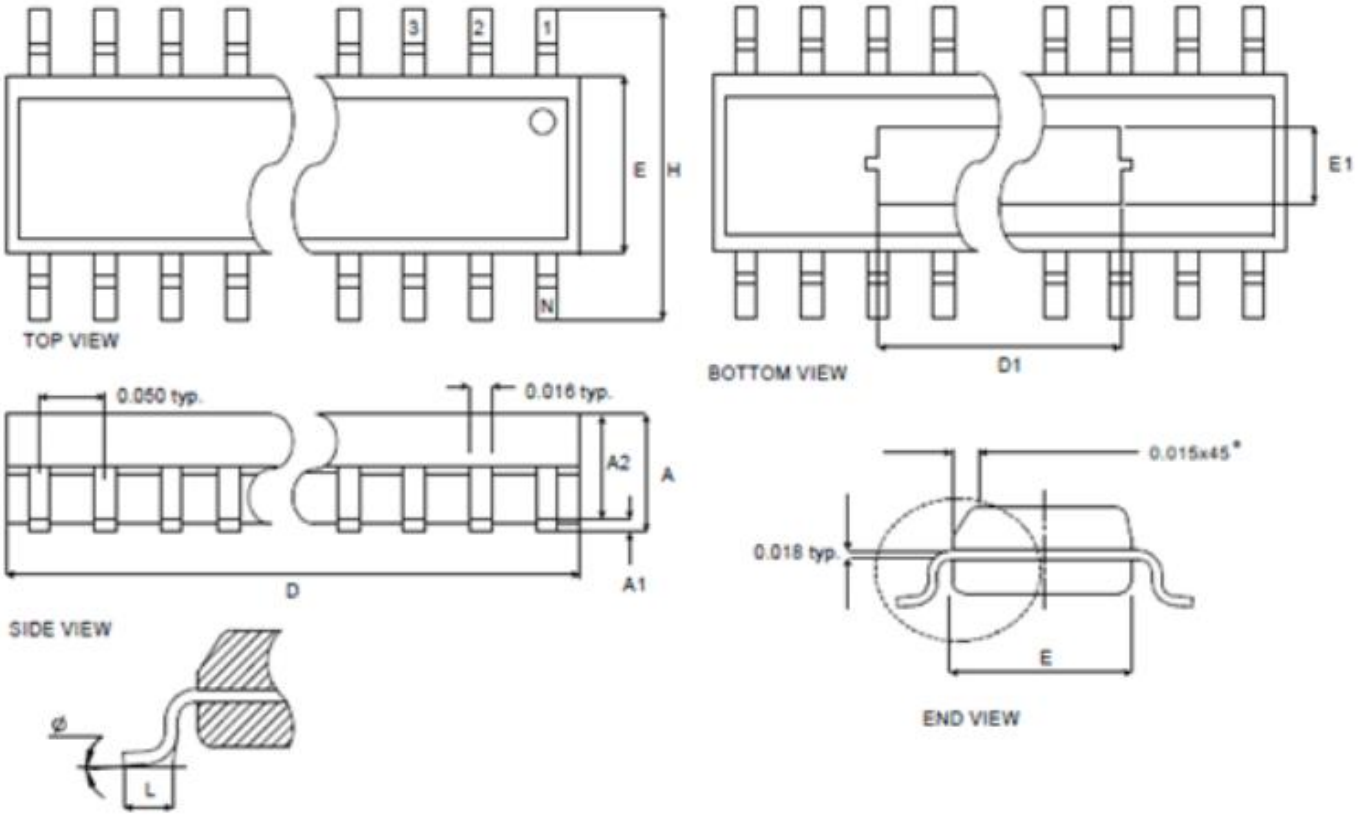

Dim	Millimeters		Inches	
	Min.	Max.	Min.	Max.
A	1.35	1.75	0.053	0.069
A1	0.10	0.25	0.004	0.010
D	9.80	10.0	0.386	0.394
D1	4.115 REF		0.162 REF	
E	3.81	3.99	0.150	0.157
E1	2.184 REF		0.086 REF	
H	5.79	6.20	0.228	0.244
L	0.41	1.27	0.016	0.050
ϕ	0°	8°	0°	8°