DIMENSIONS IN INCHES (MILLIMETERS)
DO NOT SCALE DRAWING .....

Dwg. No. GC-536BQ-0400

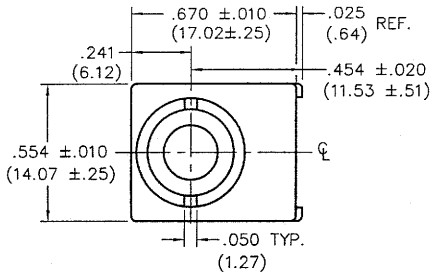

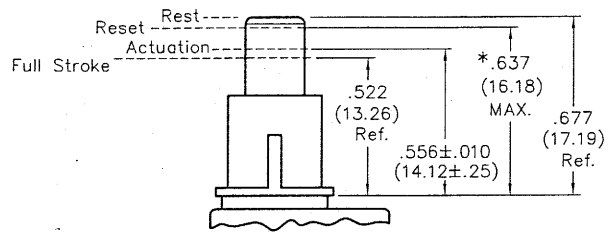

SWITCH TRAVEL SPECIFICATIONS

* Mating Part can Pre-Load Actuator down to .637 (16.18) max..

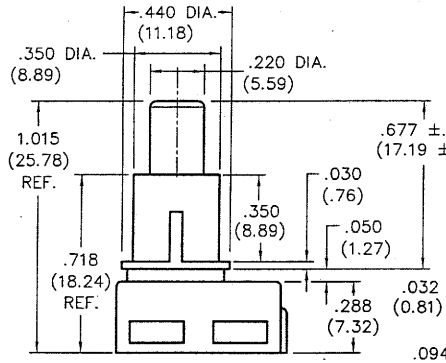

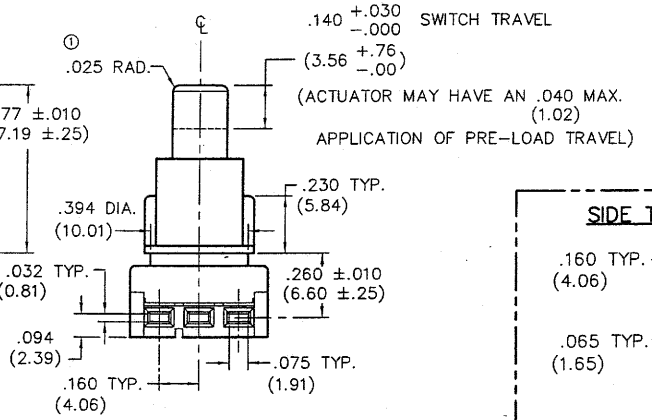

SPECIFICATIONS:

MATERIALS:

HOUSING & BASE – Nylon and or Glass Filled Nylon 6/6 UL 94–V2 minimum

ACTUATOR – Delrin UL 94–HB minimum

MOVING CONTACT – Copper Alloy/Phos. Bronze Silver Plated

STATIONARY CONTACT – BeCu 174 Alloy/75 μin. Silver Plated

ELECTRICAL RATING – 1A. 125V.A.C.
3A. 14V.D.C.

MECHANICAL PERFORMANCE – 30,000 Cycles minimum at Rated Load.

② OPERATING FORCE – 15 – 22 ozs. Typical,
4.2 – 6.1 Newtons Typical,

VOLTAGE DROP – .030V. MAX @ .7A

TERMINATION – Insert male tabs into switch housing using side termination. Refer to termination layout for dimensions."

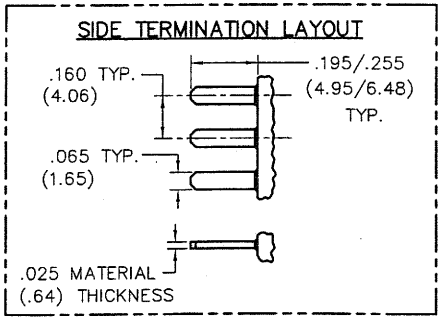

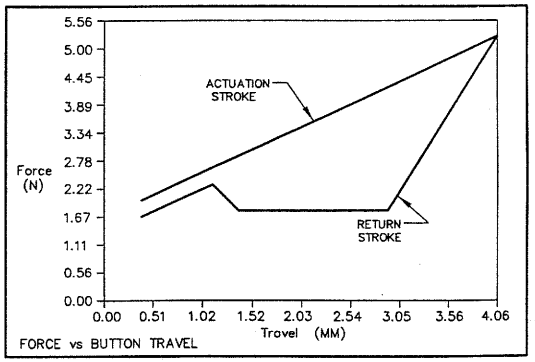

1	2	3	4	5	6	7	8	9	10

FORM-B3

REVISIONS

0 RELEASED. DGW 11-19-2007 CH NOV. 19, 2007

1 REDRAWN. ADDED .025 RAD. TO TOP OF BUTTON. DGW 3-03-2008

2 REDRAWN. OPERATING FORCE RANGE 15-22 ozs. (4.2-6.1 N) WAS 17-24 ozs. (4.6-6.6 N). BWF 3-14-2008 G.G. MAR 14 2008

PDF File Made

CW INDUSTRIES Southampton, Pa. 18966

TOLERANCES UNLESS OTHERWISE SPECIFIED
2 Place Decimal ±.010 | METRIC -
3 Place Decimal ±.005 | 1 Place Dec. ±.25mm
Angles ..... ±1° | 2 Place Dec. ±.13mm

Made for: CW IND.
Drawn by: DGW 11-19-2007
Checked by: G.Gulc 3-14-08
Approval: [illegible] 3-14-8

Title: QUIET SWITCH ASSEMBLY PUSH ON-PUSH OFF S.P.D.T. W/RIBS

Division: SWITCH

Dwg. No. GC-536BQ-0400

MASTER