PT8000—5V

60 Amp High-Performance Programmable ISR

EXCALIBUR

SLTS135A

(Revised 4/5/2001)

Features

- 60A Output Current
- Multi-Phase Topology
- +5V Input
- 5-bit Programmable:
  1.3V to 3.5V
  1.075V to 1.850V
- High Efficiency
- Differential Remote Sense
- Short Circuit Protection
- Output Tracking Feature
- Over-Temp Shutdown
- Power Good & OV Flag
- Low-Profile Package
- Solderable Copper Case
- "Current Booster" Compatible

Ordering Information

PT8001❑ = 1.3 to 3.5 Volts
PT8002❑ = 1.075 to 1.850 Volts

PT Series Suffix (PT1234X)

Case/Pin Configuration	
Vertical Through-Hole	**N**
Horizontal Through-Hole	**A**
Horizontal Surface Mount	**C**

For dimensions and PC board layout, see Package Styles 1600, 1610 and 1615

Description

The PT8000 series is a 60 A high-performance, Integrated Switching Regulator (ISR) housed in a single low-profile 44-pin SIP package. Operating from an input voltage of +5V, the PT8000 series offers a state-of-the-art "Plug-in Power" solution for highly-integrated digital systems that demand high power supply currents at low voltages.

The output voltage from these modules is programmable over a preset range via a 5-bit input. The PT8001 may be set from 1.3V to 3.5V, which is compatible with Intel's Pentium Pro® µ-processors. The output voltage of the PT8002 is programmable from 1.075V to 1.85V.

The PT8000 series incorporates many features to facilitate system integration. Output short-circuit protection and over-temperature shutdown enables these modules to survive any load fault. Two self-diagnosotic signals, "Power Good" (PWRGD*) and "Over-Voltage Flag" (OVF*) are provided. And a unique tracking feature allows the output to be synchronized to a master ramp voltage during power-up.

Other features include a standby input, and a differential remote sense to compensate for voltage drop between the ISR and load.

A low ESR capacitance of 2000µF is required at the input for proper operation.

Standard Application

C_{in} = Required 2000µF electrolytic (1)
C_L = Optional capacitance at load (1)
R_1 = Required 10k pull-up resistor when using the PWRGD* signal. The PWRGD* output is low when the output voltage is within specifications.

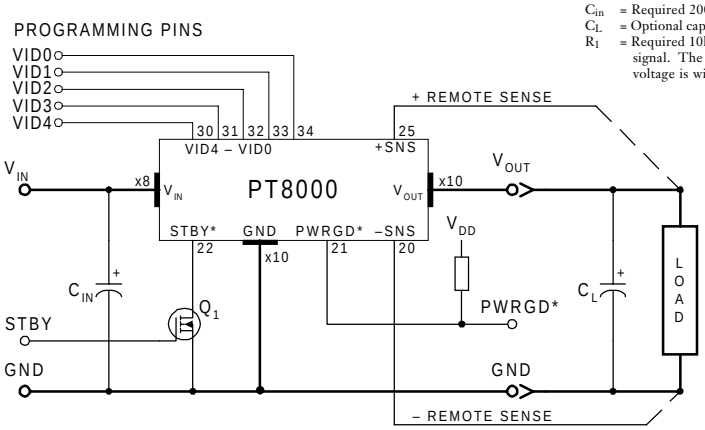

TEXAS INSTRUMENTS

Pin-Out Information

Pin	Function	Pin	Function	Pin	Function
1	V_{out}	16	GND	31	VID3
2	V_{in}	17	GND	32	VID2
3	V_{in}	18	GND	33	VID1
4	GND	19	V_{out}	34	VID0
5	GND	20	Remote Sense Gnd	35	V_{out}
6	V_{in}	21	PWRGD*	36	V_{out}
7	V_{in}	22	STBY*	37	V_{out}
8	V_{out}	23	OVF*	38	V_{in}
9	V_{out}	24	Track	39	V_{in}
10	V_{out}	25	Remote Sense V_{out}	40	GND
11	Synch 1	26	V_{out}	41	GND
12	Synch 2	27	GND	42	V_{in}
13	Synch 3	28	GND	43	V_{in}
14	Synch 4	29	GND	44	V_{out}
15	Do Not Connect	30	VID4		

For STBY* pin; Open = output enabled
Gnd = output disabled.

Programming Information

				PT8001		PT8002	
VID3	VID2	VID1	VID0	VID4=1 Vo	VID4=0 Vo	VID4=1 Vo	VID4=0 Vo
1	1	1	1	2.0V	1.30V	1.075V	1.475V
1	1	1	0	2.1V	1.35V	1.100V	1.500V
1	1	0	1	2.2V	1.40V	1.125V	1.525V
1	1	0	0	2.3V	1.45V	1.150V	1.550V
1	0	1	1	2.4V	1.50V	1.175V	1.575V
1	0	1	0	2.5V	1.55V	1.200V	1.600V
1	0	0	1	2.6V	1.60V	1.225V	1.625V
1	0	0	0	2.7V	1.65V	1.250V	1.650V
0	1	1	1	2.8V	1.70V	1.275V	1.675V
0	1	1	0	2.9V	1.75V	1.300V	1.700V
0	1	0	1	3.0V	1.80V	1.325V	1.725V
0	1	0	0	3.1V	1.85V	1.350V	1.750V
0	0	1	1	3.2V	1.90V	1.375V	1.775V
0	0	1	0	3.3V	1.95V	1.400V	1.800V
0	0	0	1	3.4V	2.00V	1.425V	1.825V
0	0	0	0	3.5V	2.05V	1.450V	1.850V

Logic 0 = Pin 20 potential (remote sense gnd)
Logic 1 = Open circuit (no pull-up resistors)
VID3 and VID4 may not be changed while the unit is operating.

Specifications

Characteristics (T_a = 25°C unless noted)	Symbols	Conditions	PT8000 SERIES Min	Typ	Max	Units
Output Current	I_o	T_a = +50°C, 400 LFM, pkg N T_a = +25°C, natural convection	0.1 (1) 0.1 (1)	— —	60 (2) 30 (2)	A
Input Voltage Range	V_{in}	$0.1A \le I_o \le 60A$	4.5	—	5.5	V
Output Voltage Tolerance	ΔV_o	Over V_{in} range, $I_o = Io_{max}$ $0°C \le T_a \le +60°C$	V_o-0.03	—	V_o+0.03	V
Line Regulation	Reg_{line}	Over V_{in} range, $I_o = I_{max}$	—	±1.0	±10	mV
Load Regulation	Reg_{load}	V_{in} =5V, $0.1 \le I_o \le I_o max$	—	±1.0	±10	mV
V_o Ripple/Noise pk-pk	V_n	V_{in} =5V, I_o = 60A	—	50	—	mV
Transient Response (no external capacitance)	t_{tr} V_{os}	I_o step from 30A to 60A in 6µs V_o over/undershoot	— —	50 100	— —	µs mV
Efficiency	η	V_{in} = +5V, I_o =30A, V_o =3.3V V_o =1.8V	— —	92 86	— —	%
Switching Frequency	f_o	Over V_{in} and I_o ranges	1.3	—	1.5	MHz
STBY* (pin 22)	Off On		0 Note (2)	—	0.8	V
PWRGD* (pin 21)	On Off	85% <V_{out} <115% of VID set point V_{out} <85%, or V_{out} >125% of VID set point	— —	500 500	— —	Ω kΩ
OVF* (pin 23)	On Off	Vout > 125% of VID set point Vout < 115% of VID set point	— —	500 500	— —	Ω kΩ
Over-temperature Shutdown Point	OTP	Case temperature -Auto reset	—	105	—	°C
Absolute Maximum Operating Temperature Range	T_a	—	–40	—	+85 (3)	°C
Storage Temperature	T_s	—	-40	—	+125	°C
Weight	—	Vertical/Horizontal	—	110	—	grams

Notes: *(1) The ISR will operate down to no load with reduced specifications.*
(2) Specified as "Open-Circuit." Either an "open-collector" bipolar transistor, or "open-drain" MOSFET is recommended for controlling this input.
(3) See Safe Operating Area curves or contact the factory to determine the appropriate derating.

Input Filter: *To facilitate the high output fast trqansient performance, a high quality 2,000µF input capacitor(s) is required for the PT8000 series. Use either tantalum or Oscon® type capacitors with a maximum ESR (equivalent series resistance) of 20mΩ.*

Performance Characteristics, V_{in} =5.0V (See Note A)

Efficiency vs Output Current

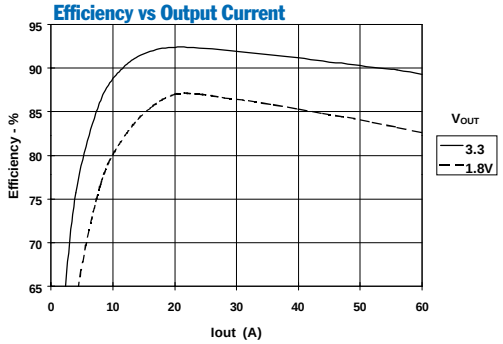

RippleVoltage vs Output Current

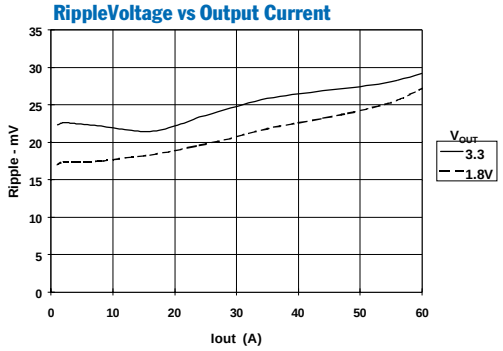

Power Dissipation vs Output Current

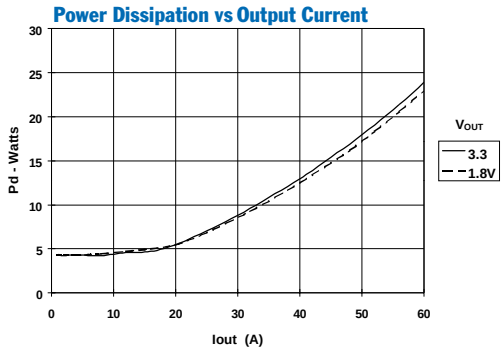

Note A: *Characteristic data has been developed from actual products tested at 25°C. This data is considered typical for the regulator.*
Note B: *Safe Operating Area curves represent conditions at which internal components are at or beow manufacturer's rated operating temperatures.*

Suffix N

PACKAGE INFORMATION AND DIMENSIONS

Vertical Through–Hole Mount (Suffix N)

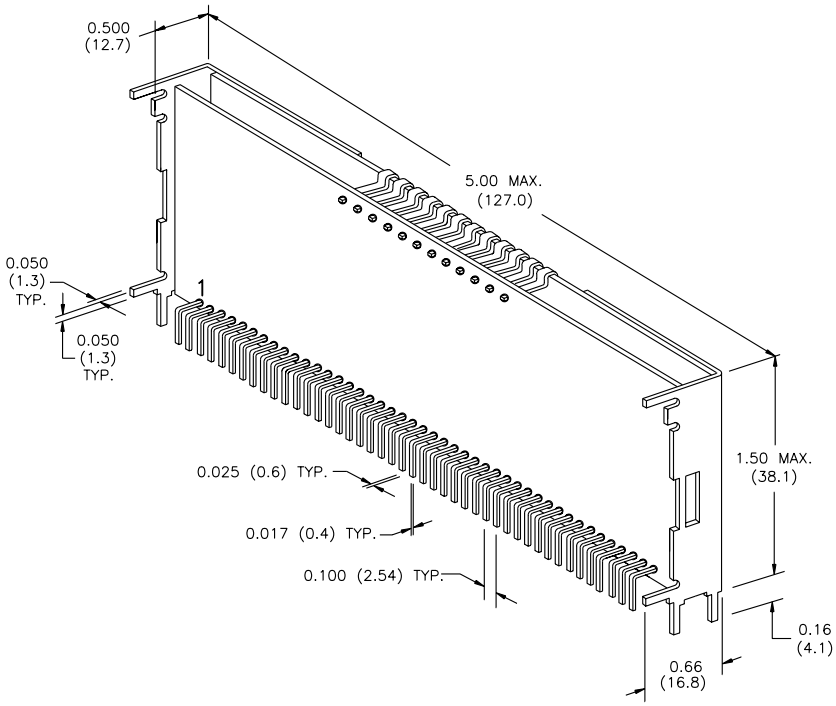

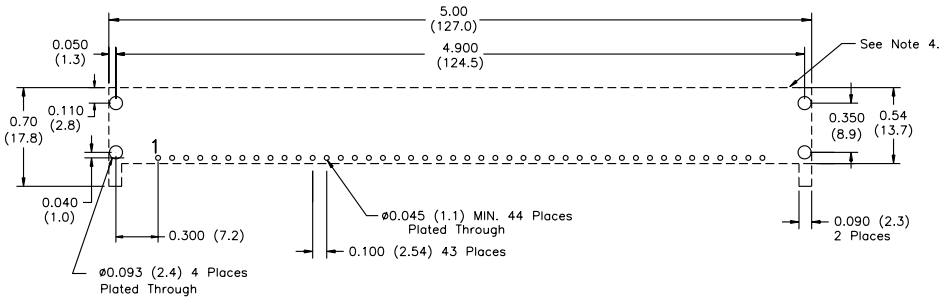

PC Layout

Notes: (Rev. A)

1: All dimensions are in inches (mm).
2: 2 place decimals are ±.030 (±0.8mm).
3: 3 place decimals are ±.010 (±0.3mm).
4: Recommended mechanical keep out area (dotted line).

Power Trends proprietary package design.
All rights reserved. Patent pending.

Suffix A

PACKAGE INFORMATION AND DIMENSIONS

Horizontal Through–Hole Mount (Suffix A)

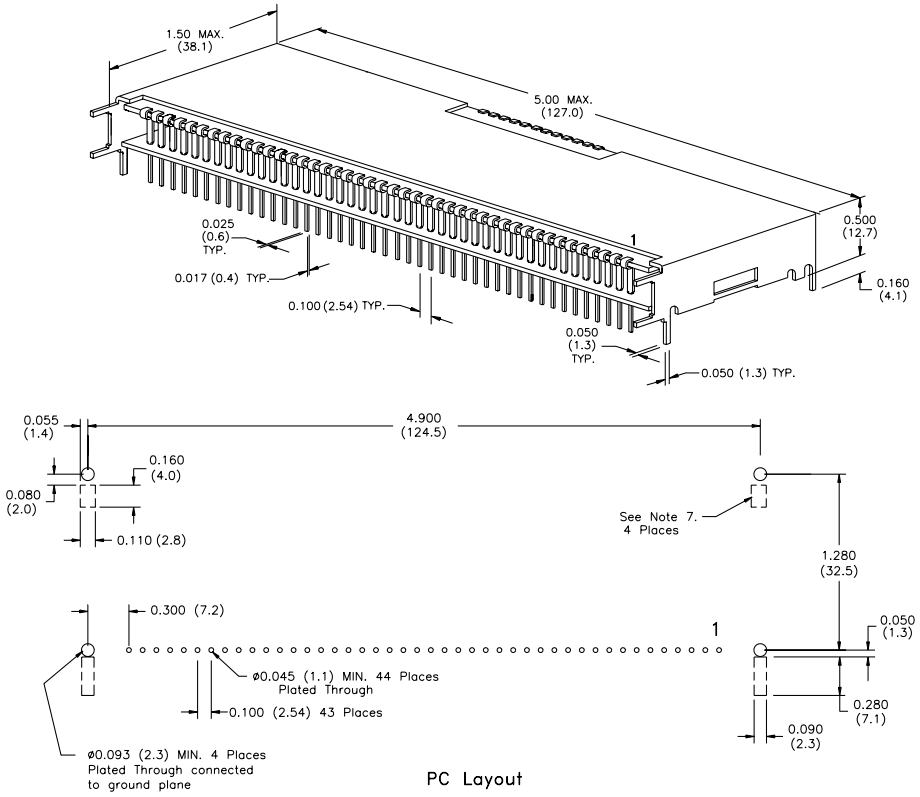

Notes: (Rev. A)

1: All dimensions are in inches (mm).
2: 2 place decimals are ±.030 (±0.8mm).
3: 3 place decimals are ±.010 (±0.3mm).
4: Recommended mechanical keep out area (dotted lines).

Power Trends proprietary package design.
All rights reserved. Patent pending.

Suffix C

PACKAGE INFORMATION AND DIMENSIONS

Horizontal Surface Mount (Suffix C)

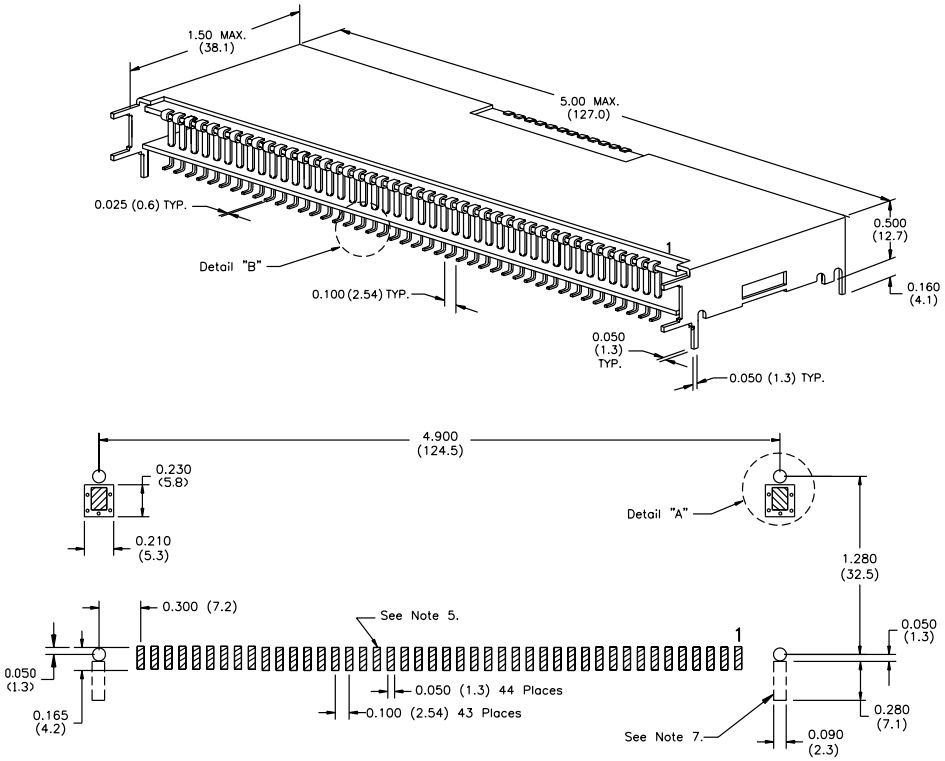

PC Layout

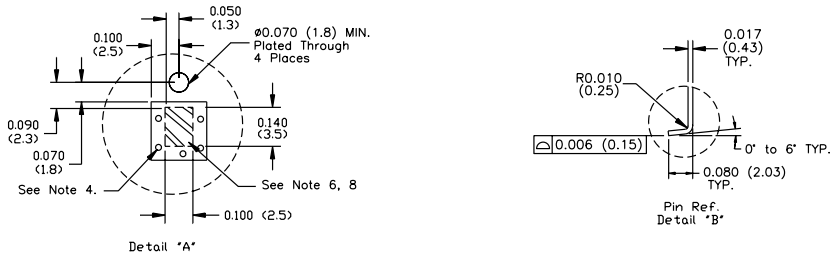

Notes: (Rev. B)

1: All dimensions are in inches (mm).
2: 2 place decimals are ±.030 (±0.8mm).
3: 3 place decimals are ±.010 (±0.3mm).
4: Vias are recommended to improve copper adhesion.
5: Power pin connections should utilize two or more vias per input, ground and output pin.
6: Solder mask openings to copper island for solder joints to mechanical pins.
7: Recommended mechanical keep out area (dotted lines).
8: Electrically connected case to ground plane.

Power Trends proprietary package design.
All rights reserved. Patent pending.

PACKAGING INFORMATION

Orderable Device	Status [1]	Package Type	Package Drawing	Pins	Package Qty	Eco Plan [2]	Lead/Ball Finish	MSL Peak Temp [3]
PT8001A	NRND	SIP MODULE	ERA	44	4	TBD	Call TI	Level-1-215C-UNLIM
PT8001C	NRND	SIP MODULE	ERC	44	4	TBD	Call TI	Level-1-215C-UNLIM
PT8001N	NRND	SIP MODULE	ERD	44	4	TBD	Call TI	Level-1-215C-UNLIM
PT8002A	NRND	SIP MODULE	ERA	44		TBD	Call TI	Call TI
PT8002C	NRND	SIP MODULE	ERC	44		TBD	Call TI	Call TI
PT8002N	NRND	SIP MODULE	ERD	44		TBD	Call TI	Call TI

[1] The marketing status values are defined as follows:
ACTIVE: Product device recommended for new designs.
LIFEBUY: TI has announced that the device will be discontinued, and a lifetime-buy period is in effect.
NRND: Not recommended for new designs. Device is in production to support existing customers, but TI does not recommend using this part in a new design.
PREVIEW: Device has been announced but is not in production. Samples may or may not be available.
OBSOLETE: TI has discontinued the production of the device.

[2] Eco Plan - The planned eco-friendly classification: Pb-Free (RoHS) or Green (RoHS & no Sb/Br) - please check http://www.ti.com/productcontent for the latest availability information and additional product content details.
TBD: The Pb-Free/Green conversion plan has not been defined.
Pb-Free (RoHS): TI's terms "Lead-Free" or "Pb-Free" mean semiconductor products that are compatible with the current RoHS requirements for all 6 substances, including the requirement that lead not exceed 0.1% by weight in homogeneous materials. Where designed to be soldered at high temperatures, TI Pb-Free products are suitable for use in specified lead-free processes.
Green (RoHS & no Sb/Br): TI defines "Green" to mean Pb-Free (RoHS compatible), and free of Bromine (Br) and Antimony (Sb) based flame retardants (Br or Sb do not exceed 0.1% by weight in homogeneous material)

[3] MSL, Peak Temp. -- The Moisture Sensitivity Level rating according to the JEDEC industry standard classifications, and peak solder temperature.

Important Information and Disclaimer: The information provided on this page represents TI's knowledge and belief as of the date that it is provided. TI bases its knowledge and belief on information provided by third parties, and makes no representation or warranty as to the accuracy of such information. Efforts are underway to better integrate information from third parties. TI has taken and continues to take reasonable steps to provide representative and accurate information but may not have conducted destructive testing or chemical analysis on incoming materials and chemicals. TI and TI suppliers consider certain information to be proprietary, and thus CAS numbers and other limited information may not be available for release.

In no event shall TI's liability arising out of such information exceed the total purchase price of the TI part(s) at issue in this document sold by TI to Customer on an annual basis.

IMPORTANT NOTICE

Texas Instruments Incorporated and its subsidiaries (TI) reserve the right to make corrections, modifications, enhancements, improvements, and other changes to its products and services at any time and to discontinue any product or service without notice. Customers should obtain the latest relevant information before placing orders and should verify that such information is current and complete. All products are sold subject to TI's terms and conditions of sale supplied at the time of order acknowledgment.

TI warrants performance of its hardware products to the specifications applicable at the time of sale in accordance with TI's standard warranty. Testing and other quality control techniques are used to the extent TI deems necessary to support this warranty. Except where mandated by government requirements, testing of all parameters of each product is not necessarily performed.

TI assumes no liability for applications assistance or customer product design. Customers are responsible for their products and applications using TI components. To minimize the risks associated with customer products and applications, customers should provide adequate design and operating safeguards.

TI does not warrant or represent that any license, either express or implied, is granted under any TI patent right, copyright, mask work right, or other TI intellectual property right relating to any combination, machine, or process in which TI products or services are used. Information published by TI regarding third-party products or services does not constitute a license from TI to use such products or services or a warranty or endorsement thereof. Use of such information may require a license from a third party under the patents or other intellectual property of the third party, or a license from TI under the patents or other intellectual property of TI.

Reproduction of information in TI data books or data sheets is permissible only if reproduction is without alteration and is accompanied by all associated warranties, conditions, limitations, and notices. Reproduction of this information with alteration is an unfair and deceptive business practice. TI is not responsible or liable for such altered documentation.

Resale of TI products or services with statements different from or beyond the parameters stated by TI for that product or service voids all express and any implied warranties for the associated TI product or service and is an unfair and deceptive business practice. TI is not responsible or liable for any such statements.

Following are URLs where you can obtain information on other Texas Instruments products and application solutions:

Products		**Applications**	
Amplifiers	amplifier.ti.com	Audio	www.ti.com/audio
Data Converters	dataconverter.ti.com	Automotive	www.ti.com/automotive
DSP	dsp.ti.com	Broadband	www.ti.com/broadband
Interface	interface.ti.com	Digital Control	www.ti.com/digitalcontrol
Logic	logic.ti.com	Military	www.ti.com/military
Power Mgmt	power.ti.com	Optical Networking	www.ti.com/opticalnetwork
Microcontrollers	microcontroller.ti.com	Security	www.ti.com/security
		Telephony	www.ti.com/telephony
		Video & Imaging	www.ti.com/video
		Wireless	www.ti.com/wireless

Mailing Address: Texas Instruments
Post Office Box 655303 Dallas, Texas 75265

Copyright © 2005, Texas Instruments Incorporated