DRV10974 12-V, Three-Phase, Sensorless BLDC Motor Driver

1 Features

- Input Voltage Range: 4.4 V to 18 V
- Phase Drive Current: 1-A Continuous (1.5-A Peak)
- 180° Sinusoidal Commutation for Optimal Acoustic Performance
- Lead Angle Configurable With External Resistor
- Soft Start and Resistor-Configurable Acceleration Profile
- Built-In Current Sense to Eliminate External Current-Sense Resistor
- No Motor Center Tap Required
- Simple User Interface:
  - One-Pin Configuration for Start-Up
  - PWM Input Designates Magnitude of Voltage Applied to Motor
  - Open-Drain FG Output Provides Speed Feedback
  - Pin for Forward and Reverse Control
- Fully Protected:
  - Motor-Lock Detect and Restart
  - Overcurrent, Short-Circuit, Overtemperature, Undervoltage

2 Applications

- White Goods
- Fans, Blowers, and Pumps
- BLDC Motor Module

3 Description

The DRV10974 device is a three-phase sensorless motor driver with integrated power MOSFETs, which can provide continuous drive current up to 1 A (rms). The device is designed for cost-sensitive, low-noise, and low-external-component-count applications.

The DRV10974 device uses a proprietary sensorless-control scheme to provide dependable commutation. The 180° sinusoidal commutation significantly reduces pure tone acoustics that are typical with 120° (trapezoidal) commutation. The DRV10974 spin-up is configured using a single external low-power resistor. The current limit can be set by an external low-power resistor.

The DRV10974 device provides for simple control of motor speed by applying a PWM input to control the magnitude of the drive voltage or by holding PWM high, varying the supply voltage, and monitoring the FG pin for speed feedback.

The DRV10974 device includes a number of features to improve efficiency. The resistor-configurable lead angle allows the user to optimize the driver efficiency by aligning the phase current and the phase BEMF. In addition, the use of low-$r_{DS(on)}$ MOSFETs helps to conserve power while the motor is being driven.

Device Information(1)

PART NUMBER	PACKAGE	BODY SIZE (NOM)
DRV10974	HTSSOP (16)	5.00 mm × 4.40 mm

(1) For all available packages, see the orderable addendum at the end of the data sheet.

Application Schematic

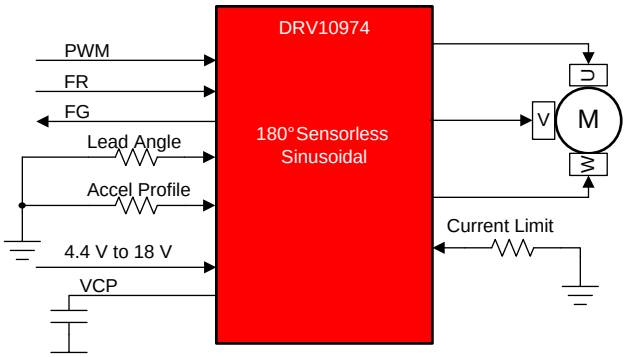

Copyright © 2017, Texas Instruments Incorporated

ADVANCE INFORMATION

An IMPORTANT NOTICE at the end of this data sheet addresses availability, warranty, changes, use in safety-critical applications, intellectual property matters and other important disclaimers. ADVANCE INFORMATION for pre-production products; subject to change without notice.

Table of Contents

1 **Features** ... 1
2 **Applications** ... 1
3 **Description** ... 1
4 **Revision History** ... 2
5 **Pin Configuration and Functions** ... 3
6 **Specifications** ... 4
6.1 Absolute Maximum Ratings ... 4
6.2 ESD Ratings ... 4
6.3 Recommended Operating Conditions ... 4
6.4 Thermal Information ... 5
6.5 Electrical Characteristics ... 5
6.6 Typical Characteristics ... 8
7 **Detailed Description** ... 9
7.1 Overview ... 9
7.2 Functional Block Diagram ... 10
7.3 Feature Description ... 10
7.4 Device Functional Modes ... 16
8 **Application and Implementation** ... 20
8.1 Application Information ... 20
8.2 Typical Application ... 20
9 **Power Supply Recommendations** ... 22
10 **Layout** ... 22
10.1 Layout Guidelines ... 22
10.2 Layout Example ... 22
11 **Device and Documentation Support** ... 23
11.1 Receiving Notification of Documentation Updates 23
11.2 Community Resources ... 23
11.3 Trademarks ... 23
11.4 Electrostatic Discharge Caution ... 23
11.5 Glossary ... 23
12 **Mechanical, Packaging, and Orderable Information** ... 23

ADVANCE INFORMATION

4 Revision History

DATE	REVISION	NOTE
January 2018	*	Initial release

Copyright © 2018, Texas Instruments Incorporated

5 Pin Configuration and Functions

PWP PowerPAD™ Package
16-Pin HTSSOP With Exposed Thermal Pad
Top View

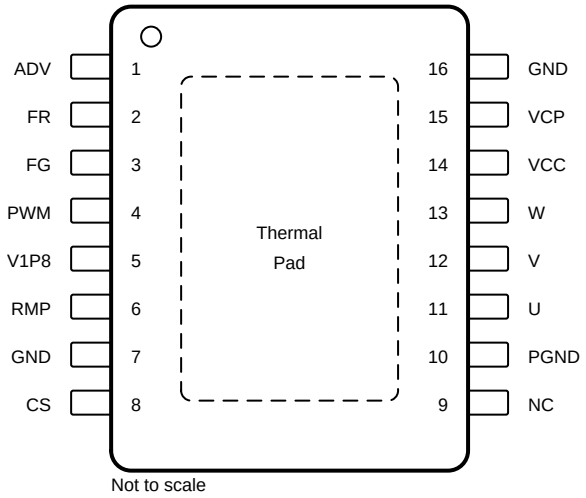

NC – No internal connection

Pin Functions

PIN		TYPE(1)	DESCRIPTION
NAME.	NO.		
ADV	1	I	Selects the applied lead angle by 1/8-W resistor; not to be driven externally with a source; leaving the pin open results in the longest lead angle; the lead angle is determined by the ADV pin voltage at power up.
CS	8	I	Selects current-limit by 1/8-W resistor; not to be driven externally with a source; leaving the pin open results in the highest current limit; the current limit is determined by the CS pin voltage at power up.
FG	3	O	Provides motor speed feedback; open-drain output with internal pullup to V3P3
FR	2	I	Direction control. FR = 0: U→V→W; FR = 1: U→W→V; value is determined by the FR pin voltage on exit of low-power mode; internal pulldown
GND	7, 16		Digital and analog ground
NC	9	NC	No internal connection
PGND	10	P	Power ground connection for motor power
PWM	4	I	Motor speed-control input; auto detect for analog or digital mode; internal pullup to 2.2 V
RMP	6	I	Acceleration ramp-rate control; 1/8-W resistor to GND to set acceleration rate; leaving the pin open results in the slowest acceleration rate; the acceleration rate is determined by the RMP pin voltage at power up
U	11	I/O	Motor phase U
V	12	I/O	Motor phase V
V1P8	5	P	LDO regulator for internal operation; 1-µF, 6.3-V ceramic capacitor tied to GND
V_{CC}	14	P	Power-supply connection; 10-µF, 25-V ceramic capacitor tied to GND
VCP	15	O	Charge-pump output; 100-nF, 10-V ceramic capacitor tied to V_{CC}
W	13	I/O	Motor phase W
Thermal pad	—		The exposed thermal pad must be electrically connected to the ground plane by soldering to the PCB for proper operation, and connected to the bottom side of the PCB through vias for better thermal spreading.

(1) I = input, O = output, I/O = input and output, NC = no connect, P = power

ADVANCE INFORMATION

ADVANCE INFORMATION

6 Specifications

6.1 Absolute Maximum Ratings

over operating ambient temperature range (unless otherwise noted)[1]

		MIN	MAX	UNIT
Pin voltage	V_{CC}	–0.3	20	V
	PWM, FR	–0.3	5.5	
	CS, RMP, ADV	–0.3	2	
	GND, PGND	–0.3	0.3	
	U, V, W	–1	20	
	V1P8	–0.3	2	
	FG	–0.3	20	
	VCP	–0.3	V_{CC} + 5.5	
Maximum junction temperature, $T_J$max		–40	150	°C
Storage temperature, T_{stg}		–55	150	°C

(1) Stresses beyond those listed under *Absolute Maximum Ratings* may cause permanent damage to the device. These are stress ratings only, which do not imply functional operation of the device at these or any other conditions beyond those indicated under *Recommended Operating Conditions*. Exposure to absolute-maximum-rated conditions for extended periods may affect device reliability.

6.2 ESD Ratings

			VALUE	UNIT
$V_{(ESD)}$	Electrostatic discharge	Human-body model (HBM), per ANSI/ESDA/JEDEC JS-001[1]	±1000	V
		Charged-device model (CDM), per JEDEC specification JESD22-C101[2]	±500	

(1) JEDEC document JEP155 states that 500-V HBM allows safe manufacturing with a standard ESD control process.
(2) JEDEC document JEP157 states that 250-V CDM allows safe manufacturing with a standard ESD control process.

6.3 Recommended Operating Conditions

over operating ambient temperature range (unless otherwise noted)

		MIN	NOM	MAX	UNIT
Supply voltage	V_{CC}	4.4		18	V
Voltage	U, V, W	–0.7		18	V
	PWM, FR	–0.1		5.5	
	FG	–0.1		18	
	CS	–0.1		1.8	
	PGND, GND	–0.1		0.1	
	RMP, ADV	–0.1		1.8	
Current	V1P8 regulator-output current; external load	0		3	mA
Operating ambient temperature, T_A		–40		85	°C
Operating junction temperature, T_J		–40		125	°C

Copyright © 2018, Texas Instruments Incorporated

6.4 Thermal Information

THERMAL METRIC[1]		DRV10974 PWP (HTSSOP) 16 PINS	UNIT
$R_{\theta JA}$	Junction-to-ambient thermal resistance	37.8	°C/W
$R_{\theta JC(top)}$	Junction-to-case (top) thermal resistance	25.2	°C/W
$R_{\theta JB}$	Junction-to-board thermal resistance	20.7	°C/W
ψ_{JT}	Junction-to-top characterization parameter	0.7	°C/W
ψ_{JB}	Junction-to-board characterization parameter	20.5	°C/W
$R_{\theta JC(bot)}$	Junction-to-case (bottom) thermal resistance	1.9	°C/W

(1) For more information about traditional and new thermal metrics, see Semiconductor and IC Package Thermal Metrics.

6.5 Electrical Characteristics

T_A = –40℃ to 85℃ (unless otherwise noted)

PARAMETER		TEST CONDITIONS	MIN	TYP	MAX	UNIT
SUPPLY CURRENT						
I_{CC}	Supply current	T_A = 25°C, V_{CC} = 12 V, no motor load		7		mA
$I_{CC(LP)}$	Low power mode	T_A = 25°C, V_{CC} = 12 V		380		µA
UVLO						
$V_{(UVLO_F)}$	V_{CC} UVLO falling			4.3		V
$V_{(UVLO_R)}$	V_{CC} UVLO rising			4.7		V
$V_{hys(UVLO)}$	V_{CC} UVLO hysteresis			400		mV
$V_{VCP(UVLO_F)}$	Charge pump UVLO falling	$V_{VCP} – V_{CC}$		3.7		V
$V_{VCP(UVLO_R)}$	Charge pump UVLO rising	$V_{VCP} – V_{CC}$		4		V
$V_{hys(VCP)}$	Charge pump UVLO hysteresis			300		mV
$V_{(V1P8_F)}$	V1P8 UVLO falling			1.4		V
$V_{(V1P8_R)}$	V1P8 UVLO rising			1.5		V
$V_{hys(V1P8)}$	V1P8 UVLO hysteresis			100		mV
VOLTAGE REGULATORS						
V_{V1P8}	V1P8 voltage	T_A = 25°C, $C_{(V1P8)}$ = 1 µF		1.8		V
I_{V1P8}	Maximum external load from V1P8	T_A = 25°C, $C_{(V1P8)}$ = 1 µF			3	mA
R_{DSON}	High-side FET on resistance	T_A = 25°C, V_{CC} = 10 V, I_O = 200 mA		0.4		Ω
		T_A = 25°C, V_{CC} < 5 V, I_O = 200 mA		0.5		
		T_A = 25°C, V_{CC} = 4.4 V, I_O = 200 mA		0.5		
R_{DSON}	Low-side FET on resistance	T_A = 25°C, V_{CC} = 10 V, I_O = 200 mA		0.4		Ω
		T_A = 25°C, V_{CC} < 5 V, I_O = 200 mA		0.5		
		T_A = 25°C, V_{CC} = 4.4 V, I_O = 200 mA		0.5		
CHARGE PUMP						
V_{VCP}	VCP voltage	V_{CC} = 4.4 V to 18 V	V_{CC} + 4	V_{CC} + 5	V_{CC} + 5.5	V

ADVANCE INFORMATION

Electrical Characteristics (continued)

T_A = –40℃ to 85℃ (unless otherwise noted)

PARAMETER		TEST CONDITIONS	MIN	TYP	MAX	UNIT
CURRENT LIMIT						
I_{LIMIT}	Current-limit threshold	V_{CC} = 12 V, $R_{(CS)}$ = 7.32 kΩ ±1%		0.2		A
		V_{CC} = 12 V, $R_{(CS)}$ = 16.2 kΩ ±1%		0.4		
		V_{CC} = 12 V, $R_{(CS)}$ = 25.5 kΩ ±1%		0.6		
		V_{CC} = 12 V, $R_{(CS)}$ = 38.3 kΩ ±1%		0.8		
		V_{CC} = 12 V, $R_{(CS)}$ = 54.9 kΩ ±1%		1		
		V_{CC} = 12 V, $R_{(CS)}$ = 80.6 kΩ ±1%		1.2		
		V_{CC} = 12 V, $R_{(CS)}$ = 115 kΩ ±1%		1.4		
		V_{CC} = 12 V, $R_{(CS)}$ = 182 kΩ ±1%, open loop and closed loop		1.6		
		V_{CC} = 12 V, $R_{(CS)}$ = 182 kΩ ±1%, align		1.5		
RANGE OF MOTORS SUPPORTED						
R_m	Motor resistance measurement	Phase to center tap	1		20	Ω
K_t	Motor BEMF constant measurement	Phase to center tap	5		150	mV/Hz
t_{ALIGN}	Motor align time			0.67		s
PWM - DIGITAL MODE						
$V_{IH(DIG)}$	PWM input high voltage		2.2			V
$V_{IL(DIG)}$	PWM input low voltage				0.6	V
f_{PWM}	PWM input frequency		0.1		100	kHz
DC_{MAX}	Maximum output PWM duty cycle	V_{VCC} < 14 V		100%		
		V_{VCC} ≥ 14 V		14 / V_{VCC} × 100%		
DC_{MIN}	Minimum output PWM duty cycle device needs to guarantee (irrespective of input PWM DC)	Lower duty cycle from 15% down		15%		
$V_{IH(AUTO)}$	PWM input high voltage for auto detection			1.695		V
$V_{IL(AUTO)}$	PWM input low voltage for exiting PWM mode			1.39		V
$R_{pu(PWM)}$	Internal PWM pullup resistor to V3P3			100		kΩ
LOW-POWER MODE						
$t_{(EX_LPM)}$	PWM pulse duration to exit low-power mode	PWM > $V_{IH(DIG)}$	1			µs
$V_{(EX_LPM)}$	PWM voltage to exit low-power mode		1.5			V
$t_{(EN_LPM)}$	PWM low time to enter low-power mode	PWM < $V_{IL(DIG)}$;motor stationary	25			ms
PWM - ANALOG MODE						
V_{ANA_FS}	Analog full-speed voltage			1.8		V
V_{ANA_ZS}	Analog zero-speed voltage		20			mV
$R_{out(PWM)}$	External analog driver output impedance				50	kΩ
t_{SAM}	Analog speed sample period			320		µs
V_{ANA_RES}	Analog voltage resolution			3.5		mV
DIGITAL I/O (FG OUTPUT, FR INPUT)						
$V_{IH(FR)}$	Input high		2.2			V
$V_{IL(FR)}$	Input low				0.6	V
$I_{(FG_SINK)}$	Output sink current, FG	V_O = 0.3 V	5			mA
$R_{pu(FG)}$	Internal FG pullup resistor to 3.3V			20		kΩ
$R_{pd(FR)}$	Internal FR pulldown resistor to ground			100		kΩ

ADVANCE INFORMATION

Copyright © 2018, Texas Instruments Incorporated

Electrical Characteristics (continued)

T_A = –40°C to 85°C (unless otherwise noted)

PARAMETER		TEST CONDITIONS	MIN	TYP	MAX	UNIT
LOCK DETECTION RELEASE TIME						
$t_{(LOCK_OFF)}$	Lock release time			5		s
OVERCURRENT PROTECTION						
I_{OC_limit}	Overcurrent protection	T_A = 25°C	2.5			A
t_{OC_retry}	Overcurrent protection retry time			5		s
THERMAL SHUTDOWN						
T_{SD}	Shutdown temperature threshold			150		°C
$T_{SD(hys)}$	Shutdown temperature threshold hysteresis			15		°C
LEAD ANGLE						
ADV_{select}	Lead angle selection	V_{CC} = 12 V, $R_{(ADV)}$ = 10.7 kΩ ±1%		10		µs
		V_{CC} = 12 V, $R_{(ADV)}$ = 14.3 kΩ ±1%		25		
		V_{CC} = 12 V, $R_{(ADV)}$ = 17.8 kΩ ±1%		50		
		V_{CC} = 12 V, $R_{(ADV)}$ = 22.1 kΩ ±1%		100		
		V_{CC} = 12 V, $R_{(ADV)}$ = 28 kΩ ±1%		150		
		V_{CC} = 12 V, $R_{(ADV)}$ = 34 kΩ ±1%		200		
		V_{CC} = 12 V, $R_{(ADV)}$ = 41.2 kΩ ±1%		250		
		V_{CC} = 12 V, $R_{(ADV)}$ = 49.9 kΩ ±1%		300		
		V_{CC} = 12 V, $R_{(ADV)}$ = 59 kΩ ±1%		400		
		V_{CC} = 12 V, $R_{(ADV)}$ = 71.5 kΩ ±1%		500		
		V_{CC} = 12 V, $R_{(ADV)}$ = 86.6 kΩ ±1%		600		
		V_{CC} = 12 V, $R_{(ADV)}$ = 105 kΩ ±1%		700		
		V_{CC} = 12 V, $R_{(ADV)}$ = 124 kΩ ±1%		800		
		V_{CC} = 12 V, $R_{(ADV)}$ = 150 kΩ ±1%		900		
		V_{CC} = 12 V, $R_{(ADV)}$ = 182 kΩ ±1%		1000		
ACCELERATION RAMP RATE						
RMP_{select}	RMP selection for acceleration profile	V_{CC} = 12 V, $R_{(RMP)}$ = 7.32 kΩ ±1%		0		code
		V_{CC} = 12 V, $R_{(RMP)}$ = 10.7 kΩ ±1%		1		
		V_{CC} = 12 V, $R_{(RMP)}$ = 14.3 kΩ ±1%		2		
		V_{CC} = 12 V, $R_{(RMP)}$ = 17.8 kΩ ±1%		3		
		V_{CC} = 12 V, $R_{(RMP)}$ = 22.1 kΩ ±1%		4		
		V_{CC} = 12 V, $R_{(RMP)}$ = 28 kΩ ±1%		5		
		V_{CC} = 12 V, $R_{(RMP)}$ = 34 kΩ ±1%		6		
		V_{CC} = 12 V, $R_{(RMP)}$ = 41.2 kΩ ±1%		7		
		V_{CC} = 12 V, $R_{(RMP)}$ = 49.9 kΩ ±1%		8		
		V_{CC} = 12 V, $R_{(RMP)}$ = 59 kΩ ±1%		9		
		V_{CC} = 12 V, $R_{(RMP)}$ = 71.5 kΩ ±1%		10		
		V_{CC} = 12 V, $R_{(RMP)}$ = 86.6 kΩ ±1%		11		
		V_{CC} = 12 V, $R_{(RMP)}$ = 105 kΩ ±1%		12		
		V_{CC} = 12 V, $R_{(RMP)}$ = 124 kΩ ±1%		13		
		V_{CC} = 12 V, $R_{(RMP)}$ = 150 kΩ ±1%		14		
		V_{CC} = 12 V, $R_{(RMP)}$ = 182 kΩ ±1%		15		

ADVANCE INFORMATION

6.6 Typical Characteristics

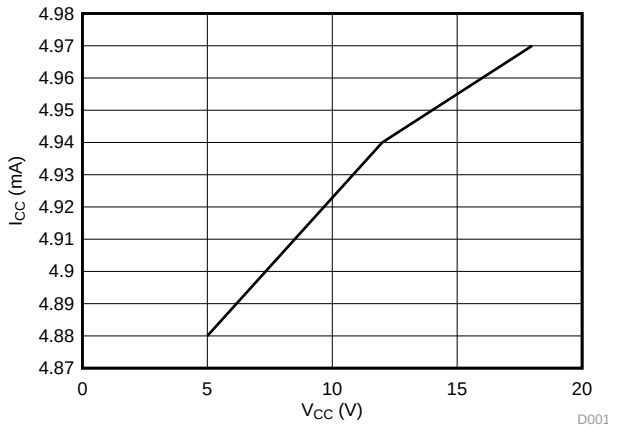

Figure 1. Supply Current vs Power Supply

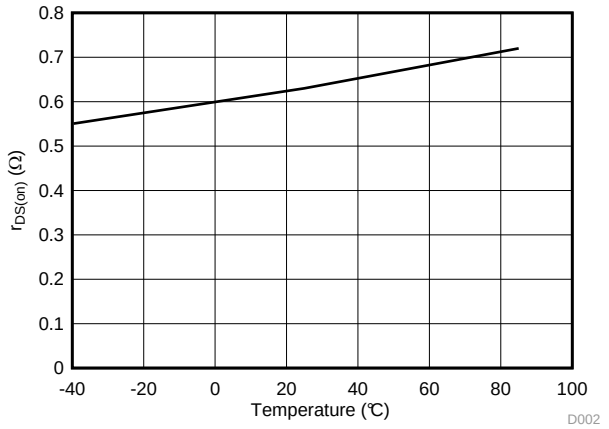

Figure 2. $r_{DS(on)}$ vs Temperature

ADVANCE INFORMATION

Copyright © 2018, Texas Instruments Incorporated

7 Detailed Description

7.1 Overview

The DRV10974 device is a three-phase sensorless motor driver with integrated power MOSFETs, which provide drive-current capability up to 1 A continuous (rms). The device is specifically designed for low-noise, low external-component count, 12-V motor drive applications. The 180° commutation requires no configuration beyond setting the peak current, the lead angle, and the acceleration profile, each of which is configured by an external resistor.

The 180° sensorless-control scheme provides sinusoidal output voltages to the motor phases as shown in Figure 3.

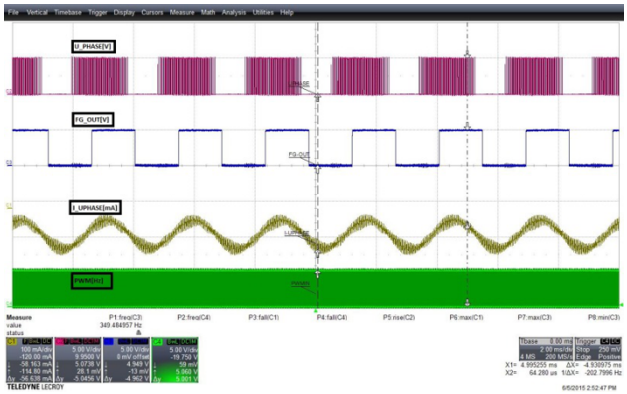

Figure 3. 180° Sensorless-Control Scheme

Interfacing to the DRV10974 device is simple and intuitive. The DRV10974 device receives a PWM input that it uses to control the speed of the motor. The duty cycle of the PWM input is used to determine the magnitude of the voltage applied to the motor. The resulting motor speed can be monitored on the FG pin. The FR pin is used to control the direction of rotation for the motor. The acceleration ramp rate is controlled by the RMP pin. The current limit is controlled by a resistor on the CS pin. The lead angle is controlled by a resistor on the ADV pin. When the motor is not spinning, a low-power mode turns off unused circuits to conserve power.

The DRV10974 device features extensive protection and fault-detect mechanisms to ensure reliable operation. The device provides overcurrent protection without the requirement for an external current-sense resistor. Rotor-lock detect uses several methods to reliably determine when the rotor stops spinning unexpectedly. The device provides additional protection for undervoltage lockout (UVLO), for thermal shutdown, and for phase short circuit (phase to phase, phase to ground, phase to supply).

ADVANCE INFORMATION

7.2 Functional Block Diagram

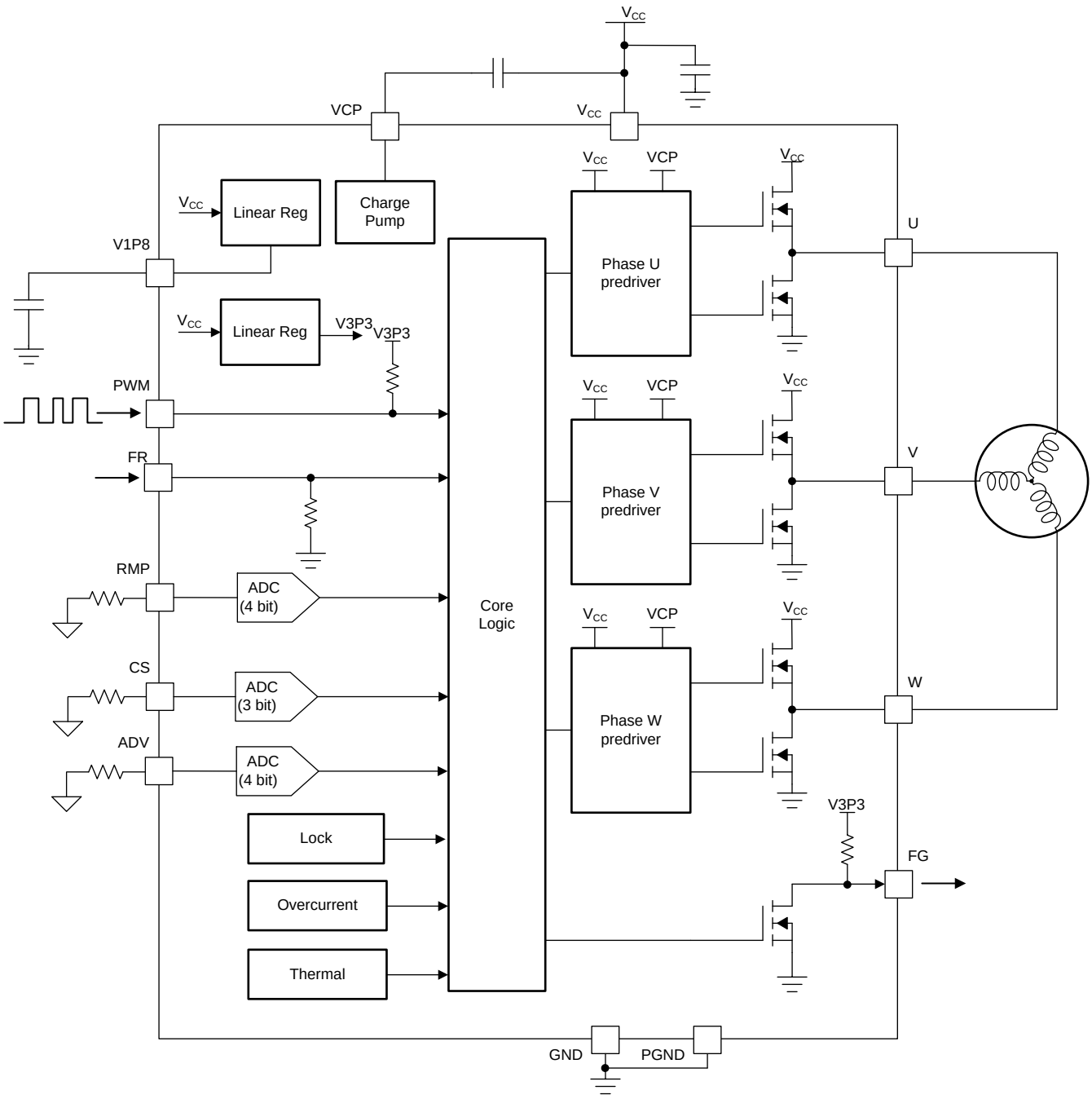

Copyright © 2017, Texas Instruments Incorporated

7.3 Feature Description

7.3.1 Speed Input and Control

The DRV10974 device has a three-phase 25-kHz PWM output that has an average value of sinusoidal waveforms from phase to phase as shown in Figure 4. When any phase is measured with reference to ground, the waveform observed is a PWM-encoded sinusoid coupled with third-order harmonics as shown in Figure 5. This encoding scheme simplifies the driver requirements because one phase output is always equal to zero.

ADVANCE INFORMATION

Copyright © 2018, Texas Instruments Incorporated

Feature Description (continued)

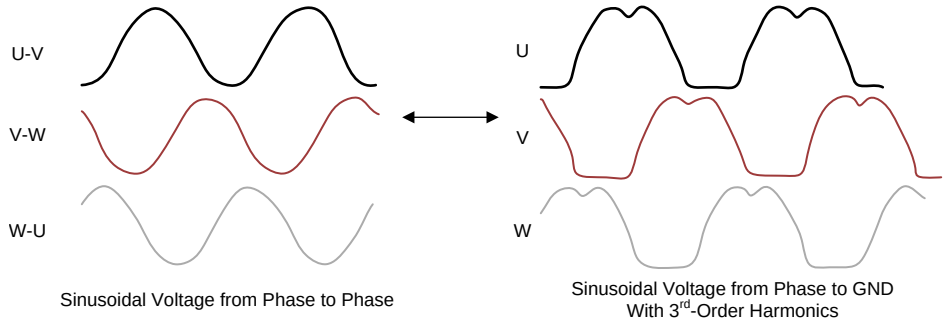

Figure 4. Sinusoidal Voltage

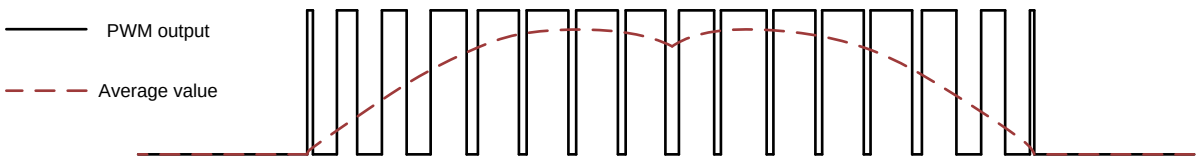

Figure 5. PWM Encoded Phase Output and the Average Value

The output amplitude is determined by the supply voltage (V_{CC}) and the PWM-commanded duty cycle (PWM) as calculated in Equation 1 and shown in Figure 6. The maximum amplitude is applied when the commanded PWM duty cycle is slightly less than 100% in order to keep the 25-kHz PWM rate.

$$Vph_{pk} = PWM_{dc} \times V_{CC} \tag{1}$$

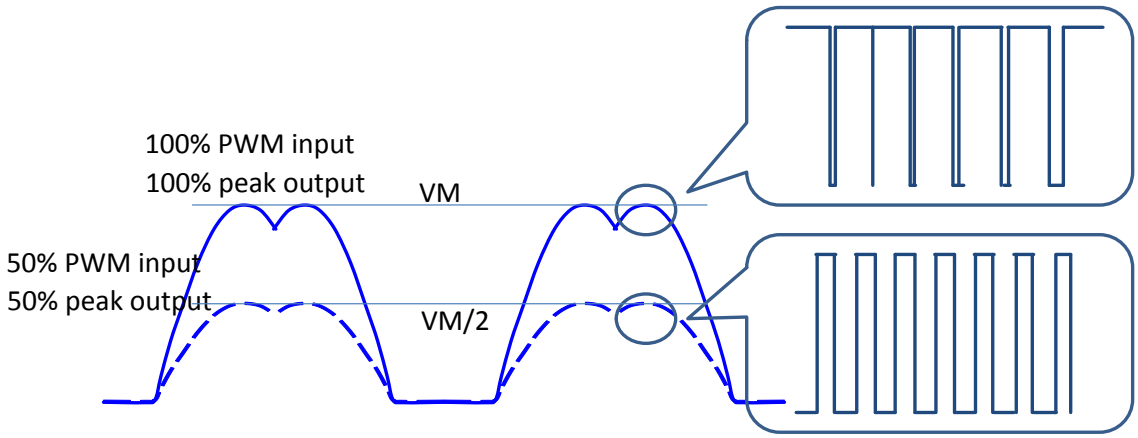

Figure 6. Output Voltage Amplitude Adjustment

The motor speed is controlled indirectly by using the PWM command to control the amplitude of the phase voltages which are applied to the motor. The PWM pin can be driven by either a digital duty cycle or an analog voltage.

The duty cycle of the PWM input (PWM) is passed through a low-pass filter that ramps from 0% to 100% duty cycle in 120 ms. The control resolution is approximately 0.2%. The signal path from PWM input to PWM motor is shown in Figure 7.

ADVANCE INFORMATION

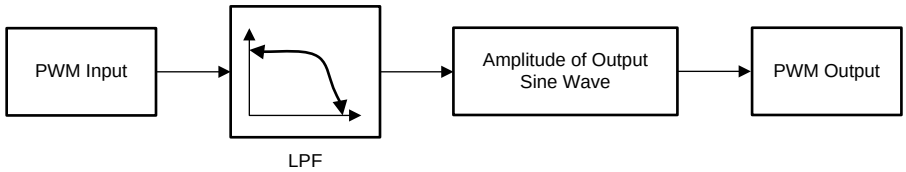

Figure 7. PWM Command Input Control Diagram

The output peak amplitude is described by Equation 1 when PWM_{dc} > 15% (the minimum-operation duty cycle). When the PWM-commanded duty cycle is lower than the minimum-operation duty cycle and higher than 1.5%, the output is controlled the by the minimum-operation duty cycle (DC_{MIN_F}). This is shown in Figure 8 for analog input, and for pulse durations greater than 120 ns for digital input. If the supply voltage (V_{VCC}) > 14 V, the maximum PWM_{DC} is limited to 14 V/V_{VCC}.

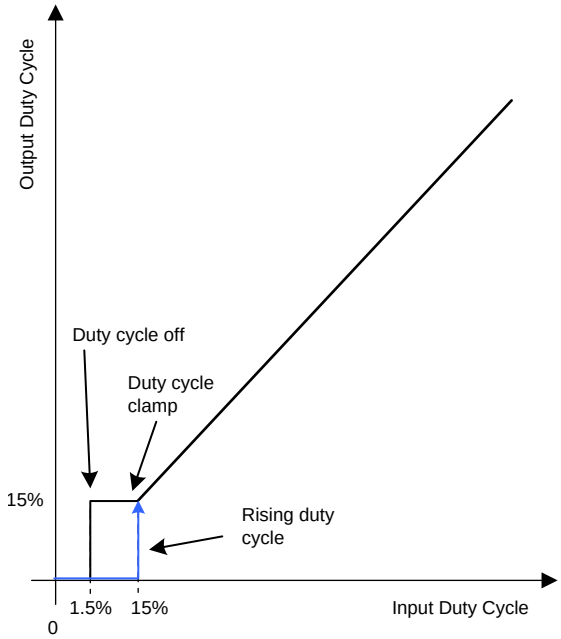

Figure 8. Speed-Control Transfer Function

7.3.2 Motor Direction Change

The DRV10974 device can be easily configured to drive the motor in either direction by setting the input on the FR (forward-reverse) pin to a logic 1 or logic 0 state. The direction of commutation as described by the commutation sequence is defined as follows:

FR = 0 U→V→W

FR = 1 U→W→V

7.3.3 Motor-Frequency Feedback (FG)

During operation of the DRV10974 device, the FG pin provides an indication of the speed of the motor. The FG pin toggles at a rate of one time during an electrical cycle. Using this information and the number of pole pairs in the motor, use Equation 2 to calculate the mechanical speed of the motor.

$$RPM = \frac{f_{(FG)} \times 60}{pole_pairs} \quad (2)$$

During open-loop acceleration the FG pin indicates the frequency of the signal that is driving the motor. The lock condition of the motor is unknown during open-loop acceleration and therefore the FG pin could toggle during this time even though the motor is not moving.

ADVANCE INFORMATION

Copyright © 2018, Texas Instruments Incorporated

During spin down, the DRV10974 device continues to provide speed feedback on the FG pin. The DRV10974 device provides the output of the U-phase comparator on the FG pin until the motor speed drops below 10 Hz. When the motor speed falls below 10 Hz the device enters into the low-power mode and the FG output is held at a logic high.

7.3.4 Lock Detection

When the motor is locked by some external condition the DRV10974 device detects the lock condition and acts to protect the motor and the device. The lock condition must be properly detected whether the condition occurs as a result of a slowly increasing load or a sudden shock.

The DRV10974 device reacts to the lock condition by stopping the motor drive. To stop driving the motor, the phase outputs are placed into a high-impedance state. After successfully transitioning into a high-impedance state as the result of a lock condition, the DRV10974 device attempts to restart the motor after $t_{(LOCK_OFF)}$ seconds.

The DRV10974 device has a comprehensive lock-detect function that includes five different lock-detect schemes. Each of these schemes detects a particular condition of the lock as shown in Figure 9.

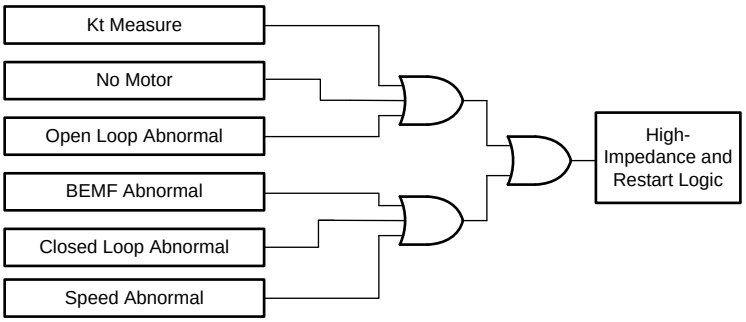

Figure 9. Lock Detect

The following sections describe each lock-detect scheme.

7.3.4.1 Lock Kt Measure

The DRV10974 device measures the actual Kt of the motor when transitioning from open-loop acceleration to closed-loop acceleration. If the measured Kt is less than 200 mV the device indicates that the handoff Kt level was not properly reached and the lock is triggered.

7.3.4.2 Lock No Motor

The phase-U current is checked at the end of the align state. If the phase-U current is not greater than 50 mA, then the motor is not connected. This condition is reported as a lock condition.

7.3.4.3 Lock Open Loop Abnormal

Transition from open loop to closed loop is based on the estimated value of BEMF. If during open loop acceleration the electrical commutation rate exceeds 200 Hz without reaching the handoff threshold this lock is triggered.

7.3.4.4 Lock BEMF Abnormal

For any specific motor, the integrated value of BEMF during half of an electrical cycle is a constant as shown by the shaded gray area in Figure 10. This value is constant regardless of whether the motor runs fast or slow. The DRV10974 device monitors this value and uses it as a criterion to determine if the motor is in a lock condition.

The DRV10974 device uses the integrated BEMF to determine the Kt value of the motor during the initial motor start. Based on this measurement, a range of acceptable Kt values is established. This range is between ½ Kt and 2 Kt. During closed-loop motor operation the Ktc (Kt calculated) value is continuously updated. There is a blanking period of 0.3 s after the transition from open loop to closed loop. If the Ktc value goes beyond the acceptable range, a lock condition is triggered as shown in Figure 11.

ADVANCE INFORMATION

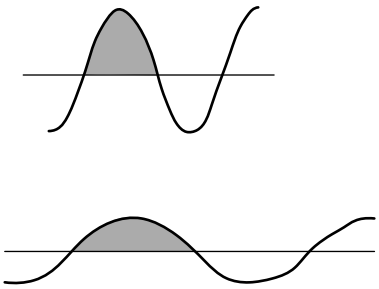

Figure 10. BEMF Integration

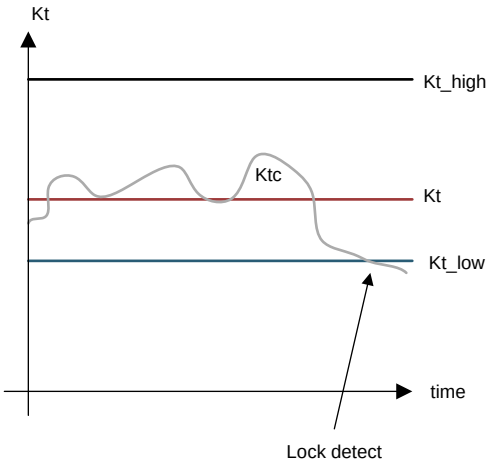

Figure 11. Abnormal Kt Lock Detect

7.3.4.5 Lock Closed Loop Abnormal

This lock condition is active when the DRV10974 device is operating in the closed-loop mode. The motor is indicated as not moving when the closed-loop commutation period becomes lower than half the previous commutation period. This condition triggers the closed-loop abnormal-lock condition.

7.3.4.6 Lock Speed Abnormal

If the motor is in normal operation, the motor BEMF is always less than the voltage applied to the phase. The sensorless-control algorithm of the DRV10974 device is continuously updating the value of the motor BEMF based on the speed of the motor and the motor Kt as shown in Figure 12. If the calculated value for motor BEMF is 1.5 times higher than the applied voltage on phase U (V_U) for an electrical period then an error is present in the system, and the calculated value for motor BEMF is wrong or the motor is out of phase with the commutation logic. When this condition is detected, a lock is triggered.

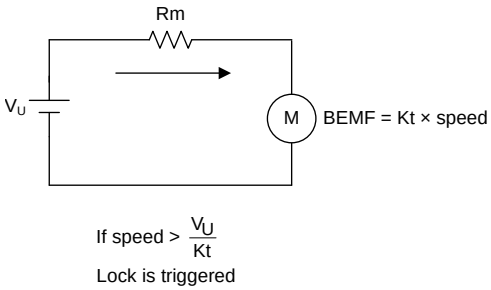

Figure 12. BEMF Monitoring

ADVANCE INFORMATION

Copyright © 2018, Texas Instruments Incorporated

7.3.5 Soft Current-Limit

The current-limit function provides active protection for preventing damage as a result of high current. The soft current-limit does not use direct-current measurement for protection, but rather, uses the measured motor resistance (Rm) and motor velocity constant (Kt) to limit the voltage applied to the phase (U) such that the current does not exceed the limit value ($I_{(LIMIT)}$). The soft current-limit scheme is shown in Figure 13 based on the calculation in Equation 3.

The soft current-limit is only active when in normal closed-loop mode and does not result in a fault condition nor does it result in the motor being stopped. The soft current-limit is typically useful for limiting the current that results from heavy loading during motor acceleration. The $I_{(LIMIT)}$ current is configured by an external resistor ($R_{(CS)}$) as shown in Table 1.

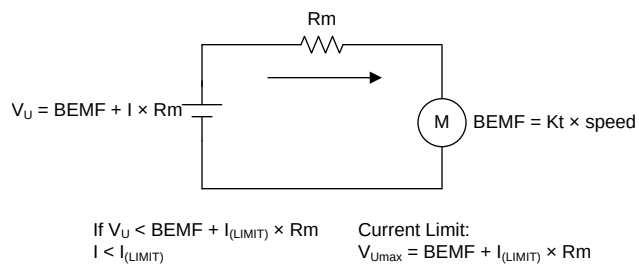

Figure 13. Current Limit

Use Equation 3 to calculate the $I_{(LIMIT)}$ value.

$$I_{(LIMIT)} = \frac{V_{(U)LIMIT} - Speed \times Kt}{Rm} \tag{3}$$

Table Table 1 can be used to determine the $I_{(LIMIT)}$ value.

Table 1. Soft Current-Limit Selections

$R_{(CS)}$ [kΩ]	$I_{(LIMIT)}$ [mA]
7.32	200
16.2	400
25.5	600
38.3	800
54.9	1000
80.6	1200
115	1400
182	1600 (1500 during align)

NOTE

The soft current-limit is not correct if the motor is out of phase with the commutation control logic (locked rotor). The soft current-limit is not effective under this condition.

7.3.6 Short-Circuit Current Protection

The short-circuit current protection function shuts off drive to the motor by placing the motor phases into a high-impedance state if the current in any motor phase exceeds the short-circuit protection limit $I_{(OC_LIMIT)}$. The DRV10974 device goes through the initialization sequence and attempts to restart the motor after the short-circuit condition is improved. This function is intended to protect the device and the motor from catastrophic failure when subjected to a short-circuit condition.

ADVANCE INFORMATION

ADVANCE INFORMATION

7.3.7 Overtemperature Protection

The DRV10974 device has a thermal shutdown function which disables the motor operation when the device junction temperature has exceeded the T_{SD} temperature. Motor operation resumes when the junction temperature becomes lower than $T_{SD} – T_{SD(hys)}$.

7.3.8 Undervoltage Protection

The DRV10974 device has an undervoltage lockout feature, which prevents motor operation whenever the supply voltage (V_{CC}) becomes too low. Upon power up, the DRV10974 device operates when V_{CC} rises above $V_{(UVLO_F)} + V_{hys(UVLO)}$. The DRV10974 device continues to operate until V_{CC} falls below $V_{(UVLO_F)}$.

7.4 Device Functional Modes

7.4.1 Spin-Up Settings

7.4.1.1 Motor Start

The DRV10974 device starts the motor using a procedure which is shown in Figure 14.

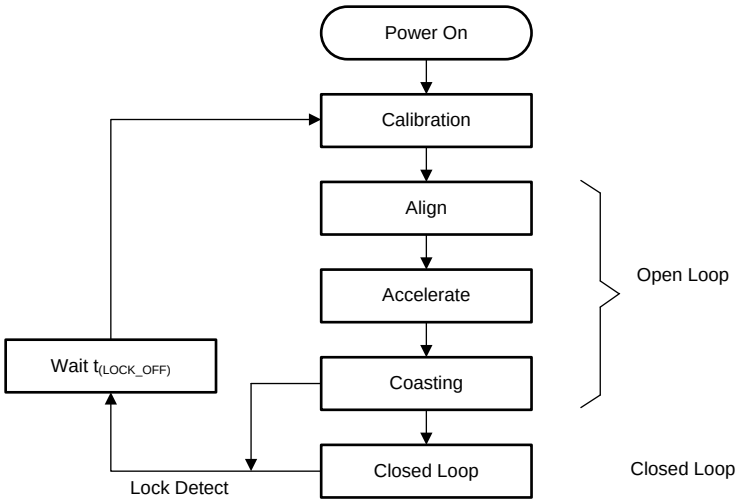

Figure 14. DRV10974 Initialization and Motor Start-Up Sequence

7.4.1.2 Align

To align the rotor to the commutation logic, the DRV10974 device applies a current equivalent to the closed-loop run current to phase U by driving phases V and W equally . This condition is maintained for a maximum of 0.67 s. To avoid a sudden change in current that could result in undesirable acoustics, the applied current is applied gradually to the motor at a rate of 1.2 A / 100 ms.

7.4.2 Open-Loop Acceleration

After the motor is confirmed to be stationary and after completing the motor initialization, the DRV10974 device begins to accelerate the motor. This acceleration is accomplished by applying a voltage to the motor at the appropriate drive state and increasing the rate of commutation without regard to the actual position of the motor (referred to as *open-loop operation*). The function of the open-loop operation is to drive the motor to a minimum speed so that the motor generates sufficient BEMF to allow the commutation control logic to drive the motor accurately.

The motor startup profile can be configured using an external resistor to set the acceleration profile before transitioning to closed-loop operation. Figure 15 shows this acceleration profile. During closed loop operation the RMP pin controls the closed-loop acceleration and deceleration.Table 2 lists the selectable acceleration parameters.

Copyright © 2018, Texas Instruments Incorporated

Device Functional Modes (continued)

Table 2. Acceleration Profile Settings

RMP SELECTION	R_{RMP} [kΩ]	Accel2 [Hz/s^2]	Accel1 [Hz/s]	CLOSED-LOOP ACCELERATION [s]	CLOSED-LOOP DECELERATION [s]
0	7.32	0.22	4.6	2.7	44
1	10.7	1.65	9.2	2.7	22
2	14.3	1.65	15	1	22
3	17.8	3.3	25	1	11
4	22.1	7	25	0.2	44
5	28	7	35	0.2	22
6	34	14	50	0.2	22
7	41.2	27	75	0.2	11
8	49.9	27	75	5.4	11
9	59	14	50	8	22
10	71.5	7	35	11	22
11	86.6	7	25	22	44
12	105	3.3	25	5.4	11
13	124	1.65	15	8	22
14	150	1.65	9.2	11	22
15	182	0.22	4.6	22	44

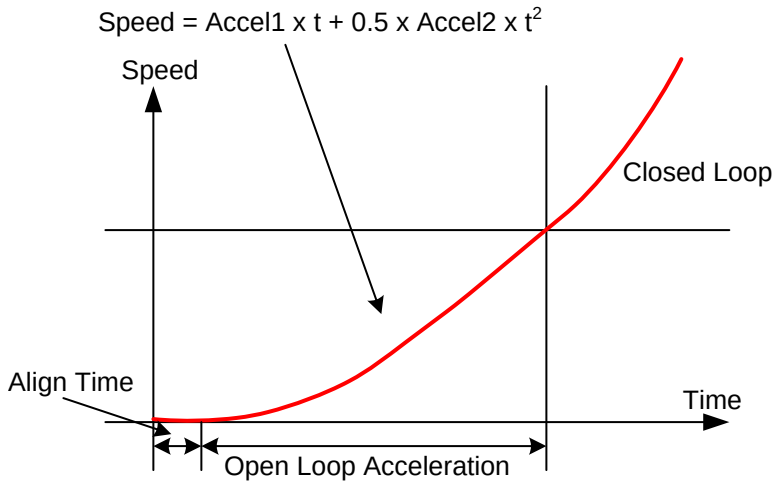

Figure 15. Startup Profile

7.4.3 Start-Up Current Sensing

The start-up peak current is controlled by the current-sense limit resistor, $R_{(CS)}$. The start current is set by selecting the $R_{(CS)}$ resistor based on Table 3. The current should be selected to allow the motor to accelerate reliably to the handoff threshold. Heavier loads may require a higher current setting, but the rate of acceleration is limited by the programmed resistor, $R_{(RMP)}$.

ADVANCE INFORMATION

Table 3. Start-Up Current Limit

$R_{(CS)}$ [kΩ]	$I_{(LIMIT)}$ [mA]
7.32	200
16.2	400
25.5	600
38.3	800
54.9	1000
80.6	1200
115	1400
182	1600 (1500 for align)

7.4.4 Closed Loop

When the motor accelerates to the target BEMF threshold, commutation control transitions from open-loop mode to closed-loop mode. During this transition, the motor is allowed to coast for one electrical cycle to measure Kt. The commutation drive sequence and timing are determined by the internal control algorithm, and the applied voltage is determined by the PWM-commanded duty-cycle input. The closed-loop acceleration and deceleration values are provided in Table 2.

7.4.5 Control Advance Angle

To achieve the best efficiency, the drive state of the motor must be controlled such that the current is aligned with the BEMF voltage of the motor. Figure 16 illustrates the operation when the drive angle has been optimized. For complete flexibility the DRV10974 device offers a wide range of fixed lead times. The options for lead time are controlled by a resistor on the ADV pin. The values available are shown in Table 4.

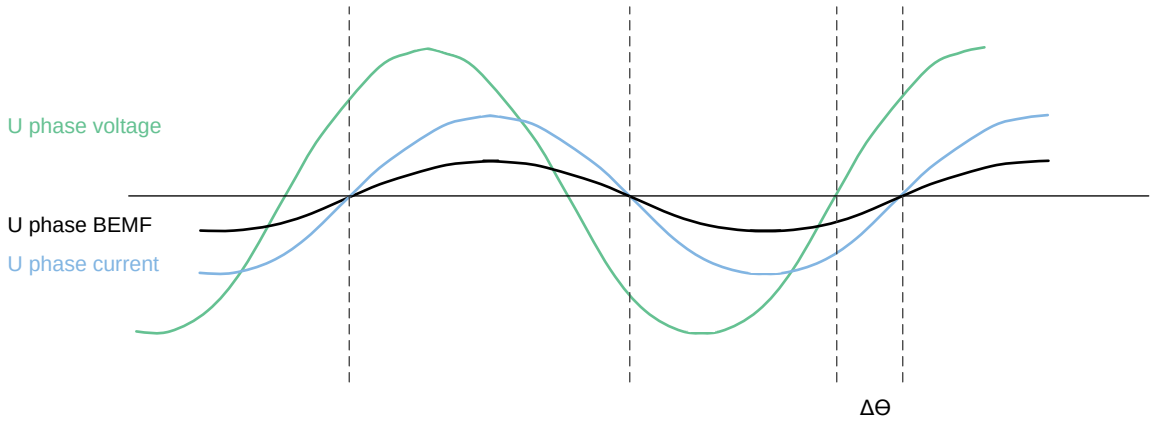

Figure 16. Drive Angle Adjustment

ADVANCE INFORMATION

Copyright © 2018, Texas Instruments Incorporated

Table 4. Lead Time Selection

R_{ADV} [kΩ]	LEAD TIME [us]
10.7	10
14.3	25
17.8	50
22.1	100
28	150
34	200
41.2	250
49.9	300
59	400
71.5	500
86.6	600
105	700
124	800
150	900
182	1000

ADVANCE INFORMATION

8 Application and Implementation

NOTE

Information in the following applications sections is not part of the TI component specification, and TI does not warrant its accuracy or completeness. TI's customers are responsible for determining suitability of components for their purposes. Customers should validate and test their design implementation to confirm system functionality.

8.1 Application Information

The DRV10974 device is used in sensorless 3-phase BLDC motor control. The driver provides a high-performance, high-reliability, flexible, and simple solution for appliance fan, pump, and blower applications. The following design shows a common application of the DRV10974 device.

8.2 Typical Application

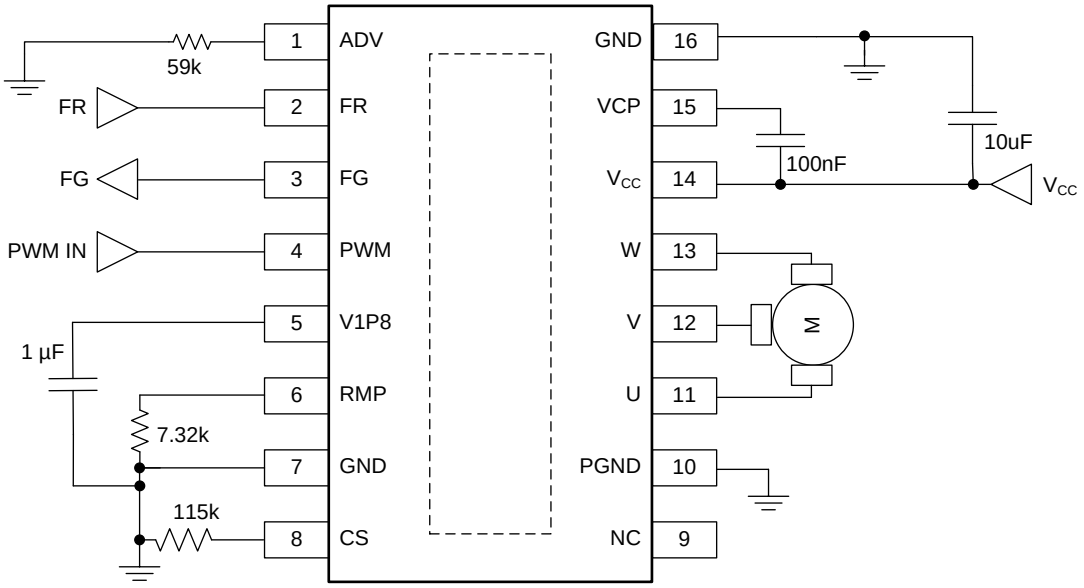

Figure 17. Typical Application Schematic

Table 5. Recommended External Components

NODE 1	NODE 2	COMPONENT
V_{CC}	GND	10-µF, 25-V ceramic capacitor tied from V_{CC} to ground
VCP	V_{CC}	100-nF, 10-V ceramic capacitor tied from VCP to V_{CC}
V1P8	GND	1-µF, 6.3-V ceramic capacitor tied from V1P8 to ground
RMP	GND	1%, 1/8 watt resistor tied from RMP to ground to set the desired acceleration profile
CS	GND	1%, 1/8 watt resistor tied from CS to ground to set the desired current limit
ADV	GND	1% 1/8 watt resistor tied from ADV to ground to set the desired lead angle (time)

8.2.1 Design Requirements

Table 6 provides design input parameters and motor parameters for system design.

Table 6. Recommend Application Range

		MIN	TYP	MAX	UNIT
Motor voltage		4.4	12	18	V
BEMF constant	Phase to center tap, measured while motor is coasting	5		150	mV/Hz

Copyright © 2018, Texas Instruments Incorporated

ADVANCE INFORMATION

Table 6. Recommend Application Range (continued)

		MIN	TYP	MAX	UNIT
Motor phase resistance	Phase to center tap	1		20	Ω
Motor winding current (rms)				1	A
Absolute maximum current	During locked condition			2.5	A

8.2.2 Detailed Design Procedure

See the Design Requirements section and make sure your system meets the recommended application range.

The tuning procedure is done sequentially in 4 phase. The 4 phases are given here.

Phase 1 - Find the closed loop current and coasting time.

1. Set ADV to 400 μsec (59 kΩ), CS to 1.4 A (115 kΩ), and RMP to the slowest setting (7.32 kΩ).
2. Apply power to the device to spin the motor to maximum target speed.
3. If the motor fails to spin up reduce the current limit (CS) by one level. Repeat step 3 until the motor successfully spins up.
4. Record the motor peak phase current during steady state run (I_{peak}).
5. Provide a command of 0 and measure the time required for the motor to coast to a stop (t_{coast}).
6. Based on the coast time (t_{coast}) the table below provides the order of selection for RMP.

Table 7. RMP Selection Based on Coast Time

t_{coast}	RMP selection order
Less than 11 s	17.8 kΩ; 41.2 kΩ
11 s to 22 s	10.7 kΩ; 14.3 kΩ; 28 kΩ; 34 kΩ
Greater than 22 s	7.32 kΩ; 22.1 kΩ

Phase 2 - Tune RMP for max speed operation.

1. Apply a current limit (CS) closest to 4 times the peak current (I_{peak})
2. Chose the RMP resistor value based on the measured coast time (t_{coast})
3. Start with the smallest valued resistor for RMP in the RMP selection order for the t_{coast} category (less than 11 s, 11 to 22 s, or greater than 22 s). Record every RMP resistor value that successfully spins the motor.

Phase 3 - Tune RMP for minimum speed operation.

1. Start with the smallest successful RMP resistor value from Phase 2 item 3.
2. Increase the RMP resistor value until failure. Record every RMP setting that successfully spins the motor.
3. If none of the RMP values from Phase 2 are successful: Reduce the current limit (CS) to 3 times the peak current (I_{peak}) and chose the next great t_{coast} category.
4. For the highest RMP resistor value that passed Phase 2 and Phase 3 vary ADV from the smallest resistor value to the highest resistor value.
5. Monitor the supply current and the speed of the motor.
6. Select the ADV resistor value that provides the highest speed using the minimum current.

ADVANCE INFORMATION

8.2.3 Application Curves

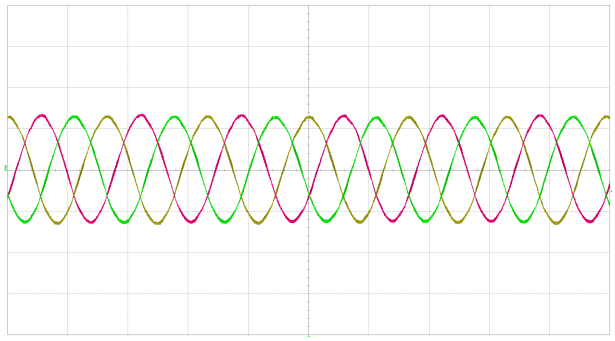

Figure 18. DRV10974 Operation Current Waveform

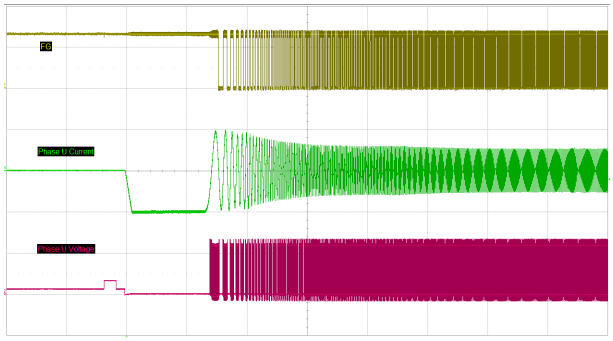

Figure 19. DRV10974 Start-Up Waveform

9 Power Supply Recommendations

The DRV10974 device is designed to operate from an input voltage supply, V_{CC} , range between 4.4 V and 18 V. The user must place a minimum of a 10-µF capacitor rated for V_{CC} as close as possible to the V_{CC} and GND pins.

If the power supply ripple is more than 200 mV, in addition to the local decoupling capacitors, a bulk capacitance is required and must be sized according to the application requirements.

10 Layout

10.1 Layout Guidelines

- Use thick traces when routing to V_{CC}, GND, U, V, and W pins, because high current passes through these traces.
- Place the 10-µF capacitor between V_{CC} and GND, and as close to the V_{CC} and GND pins as possible.
- Place the 100-nF capacitor between VCP and V_{CC}, and as close to the VCP and V_{CC} pins as possible.
- Connect GND and PGND under the thermal pad.
- Keep the thermal pad connection as large as possible. It should be one piece of copper without any gaps.

10.2 Layout Example

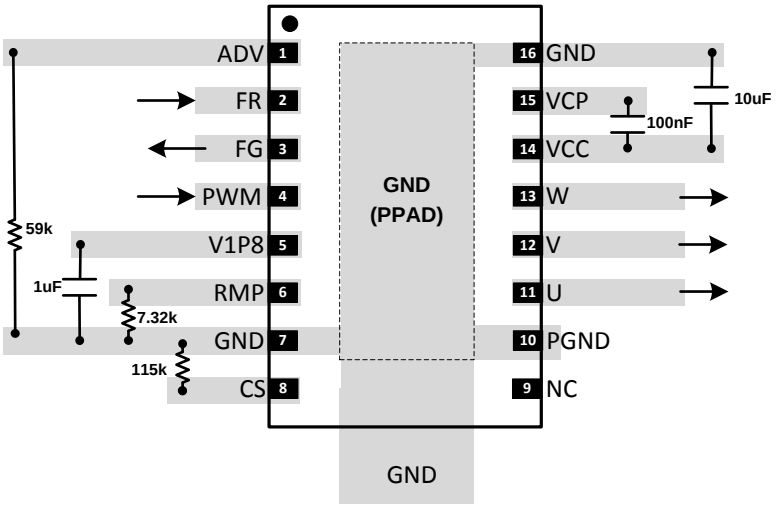

Figure 20. Layout Example

Copyright © 2018, Texas Instruments Incorporated

ADVANCE INFORMATION

11 Device and Documentation Support

11.1 Receiving Notification of Documentation Updates

To receive notification of documentation updates, navigate to the device product folder on ti.com. In the upper right corner, click on *Alert me* to register and receive a weekly digest of any product information that has changed. For change details, review the revision history included in any revised document.

11.2 Community Resources

The following links connect to TI community resources. Linked contents are provided "AS IS" by the respective contributors. They do not constitute TI specifications and do not necessarily reflect TI's views; see TI's Terms of Use.

TI E2E™ Online Community ***TI's Engineer-to-Engineer (E2E) Community.*** Created to foster collaboration among engineers. At e2e.ti.com, you can ask questions, share knowledge, explore ideas and help solve problems with fellow engineers.

Design Support ***TI's Design Support*** Quickly find helpful E2E forums along with design support tools and contact information for technical support.

11.3 Trademarks

E2E is a trademark of Texas Instruments.
All other trademarks are the property of their respective owners.

11.4 Electrostatic Discharge Caution

This integrated circuit can be damaged by ESD. Texas Instruments recommends that all integrated circuits be handled with appropriate precautions. Failure to observe proper handling and installation procedures can cause damage.

ESD damage can range from subtle performance degradation to complete device failure. Precision integrated circuits may be more susceptible to damage because very small parametric changes could cause the device not to meet its published specifications.

11.5 Glossary

SLYZ022 — *TI Glossary*.

This glossary lists and explains terms, acronyms, and definitions.

12 Mechanical, Packaging, and Orderable Information

The following pages include mechanical, packaging, and orderable information. This information is the most-current data available for the designated device. This data is subject to change without notice and without revision of this document. For browser-based versions of this data sheet, see the left-hand navigation pane.

ADVANCE INFORMATION

PACKAGING INFORMATION

Orderable Device	Status (1)	Package Type	Package Drawing	Pins	Package Qty	Eco Plan (2)	Lead/Ball Finish (6)	MSL Peak Temp (3)	Op Temp (°C)	Device Marking (4/5)	Samples
DRV10974PWPR	PREVIEW	HTSSOP	PWP	16	2000	Green (RoHS & no Sb/Br)	CU NIPDAU	Level-3-260C-168 HR	-40 to 125	10974	
XDRV10974PWPR	ACTIVE	HTSSOP	PWP	16	1	TBD	Call TI	Call TI	-40 to 125		Samples

(1) The marketing status values are defined as follows:
ACTIVE: Product device recommended for new designs.
LIFEBUY: TI has announced that the device will be discontinued, and a lifetime-buy period is in effect.
NRND: Not recommended for new designs. Device is in production to support existing customers, but TI does not recommend using this part in a new design.
PREVIEW: Device has been announced but is not in production. Samples may or may not be available.
OBSOLETE: TI has discontinued the production of the device.

(2) **RoHS:** TI defines "RoHS" to mean semiconductor products that are compliant with the current EU RoHS requirements for all 10 RoHS substances, including the requirement that RoHS substance do not exceed 0.1% by weight in homogeneous materials. Where designed to be soldered at high temperatures, "RoHS" products are suitable for use in specified lead-free processes. TI may reference these types of products as "Pb-Free".
RoHS Exempt: TI defines "RoHS Exempt" to mean products that contain lead but are compliant with EU RoHS pursuant to a specific EU RoHS exemption.
Green: TI defines "Green" to mean the content of Chlorine (Cl) and Bromine (Br) based flame retardants meet JS709B low halogen requirements of <=1000ppm threshold. Antimony trioxide based flame retardants must also meet the <=1000ppm threshold requirement.

(3) MSL, Peak Temp. - The Moisture Sensitivity Level rating according to the JEDEC industry standard classifications, and peak solder temperature.

(4) There may be additional marking, which relates to the logo, the lot trace code information, or the environmental category on the device.

(5) Multiple Device Markings will be inside parentheses. Only one Device Marking contained in parentheses and separated by a "~" will appear on a device. If a line is indented then it is a continuation of the previous line and the two combined represent the entire Device Marking for that device.

(6) Lead/Ball Finish - Orderable Devices may have multiple material finish options. Finish options are separated by a vertical ruled line. Lead/Ball Finish values may wrap to two lines if the finish value exceeds the maximum column width.

Important Information and Disclaimer: The information provided on this page represents TI's knowledge and belief as of the date that it is provided. TI bases its knowledge and belief on information provided by third parties, and makes no representation or warranty as to the accuracy of such information. Efforts are underway to better integrate information from third parties. TI has taken and continues to take reasonable steps to provide representative and accurate information but may not have conducted destructive testing or chemical analysis on incoming materials and chemicals. TI and TI suppliers consider certain information to be proprietary, and thus CAS numbers and other limited information may not be available for release.

In no event shall TI's liability arising out of such information exceed the total purchase price of the TI part(s) at issue in this document sold by TI to Customer on an annual basis.

PWP 16 PowerPAD™ TSSOP - 1.2 mm max height

PLASTIC SMALL OUTLINE

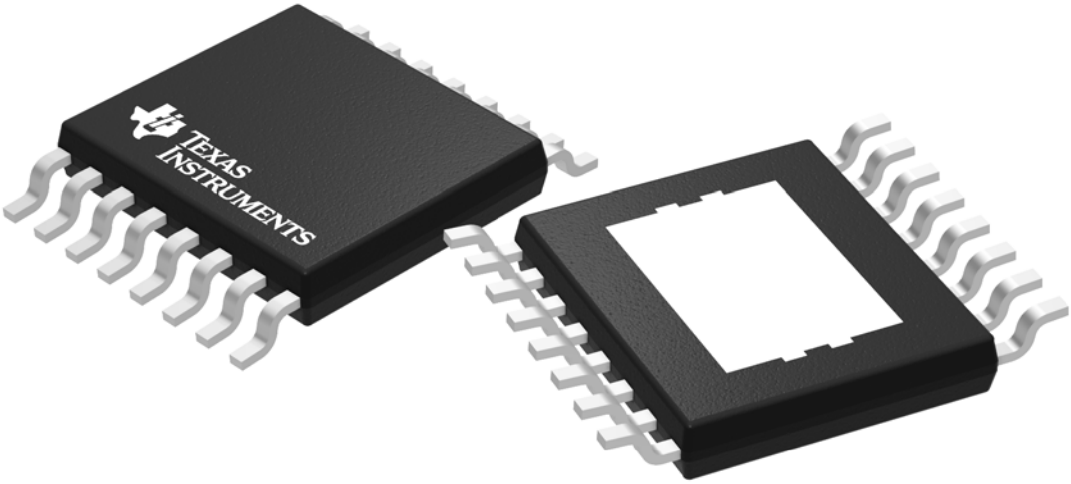

Images above are just a representation of the package family, actual package may vary.
Refer to the product data sheet for package details.

4073225-3/J

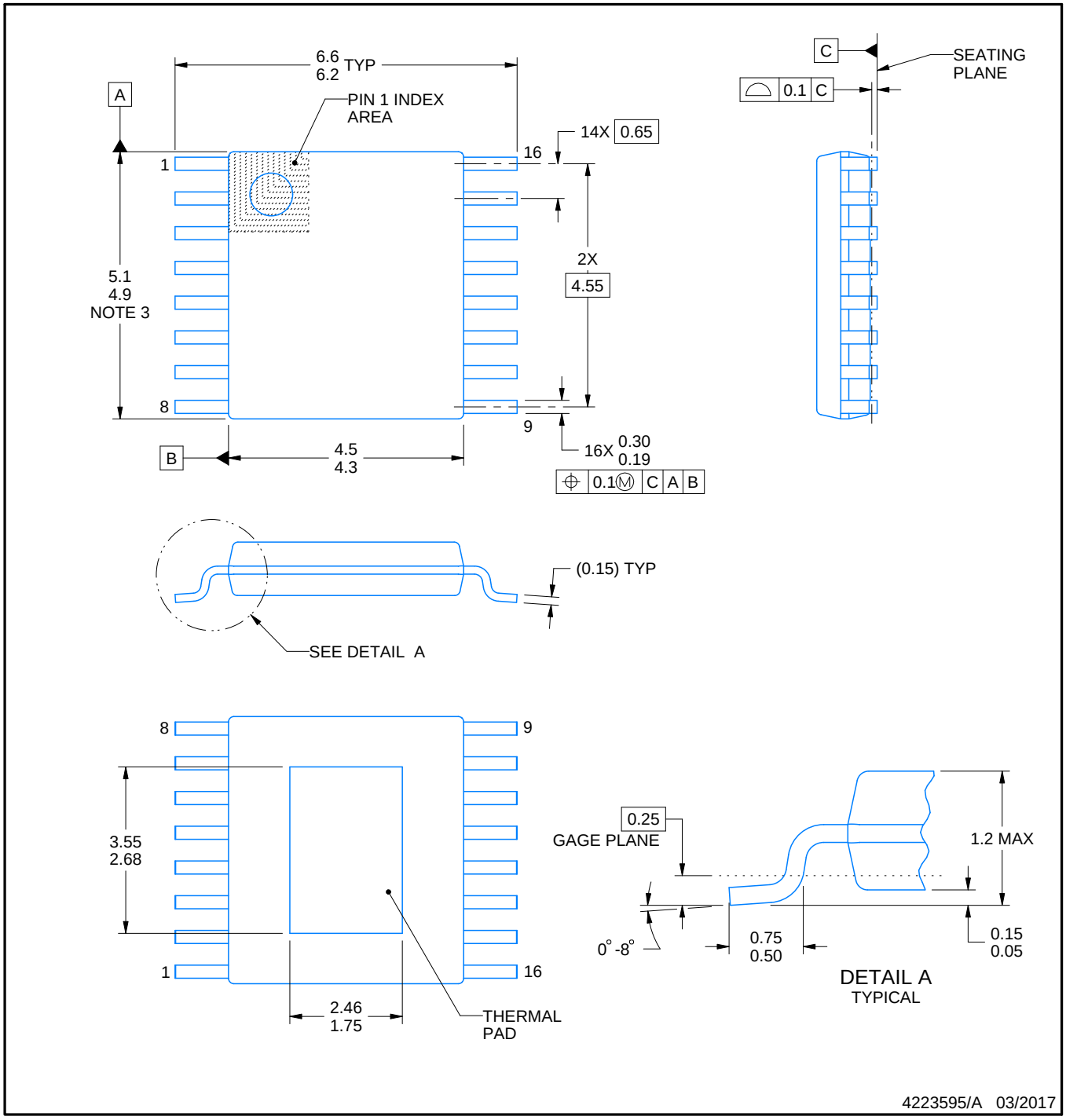

PowerPAD is a trademark of Texas Instruments.

NOTES:

1. All linear dimensions are in millimeters. Any dimensions in parenthesis are for reference only. Dimensioning and tolerancing per ASME Y14.5M.
2. This drawing is subject to change without notice.
3. This dimension does not include mold flash, protrusions, or gate burrs. Mold flash, protrusions, or gate burrs shall not exceed 0.15 mm per side.
4. Reference JEDEC registration MO-153.

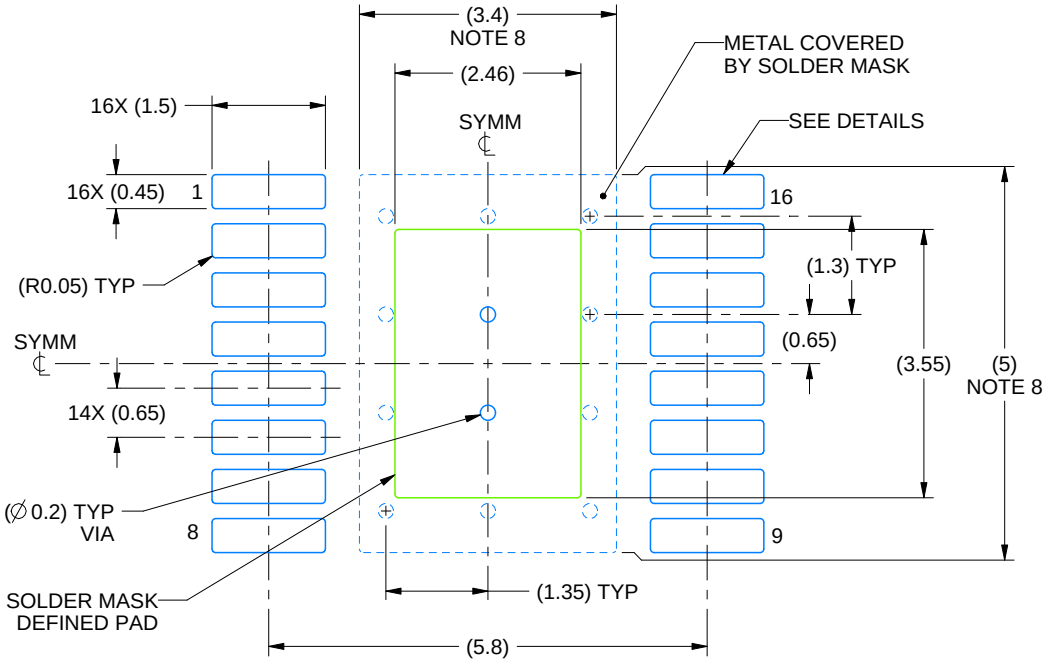

LAND PATTERN EXAMPLE
EXPOSED METAL SHOWN
SCALE: 10X

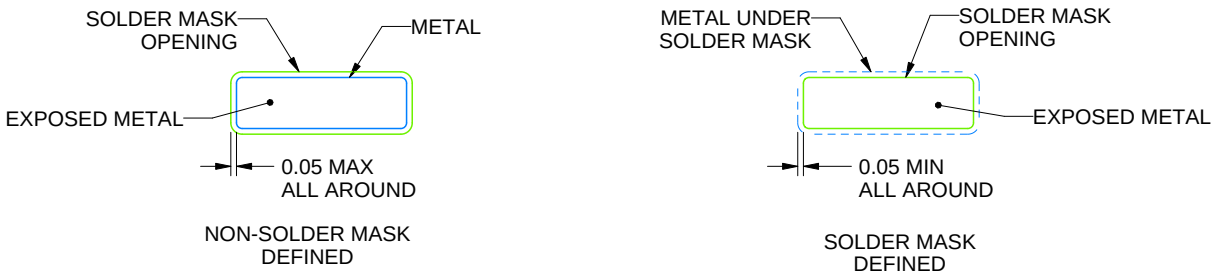

SOLDER MASK DETAILS

4223595/A 03/2017

NOTES: (continued)

5. Publication IPC-7351 may have alternate designs.
6. Solder mask tolerances between and around signal pads can vary based on board fabrication site.
7. This package is designed to be soldered to a thermal pad on the board. For more information, see Texas Instruments literature numbers SLMA002 (www.ti.com/lit/slma002) and SLMA004 (www.ti.com/lit/slma004).
8. Size of metal pad may vary due to creepage requirement.
9. Vias are optional depending on application, refer to device data sheet. It is recommended that vias under paste be filled, plugged or tented.

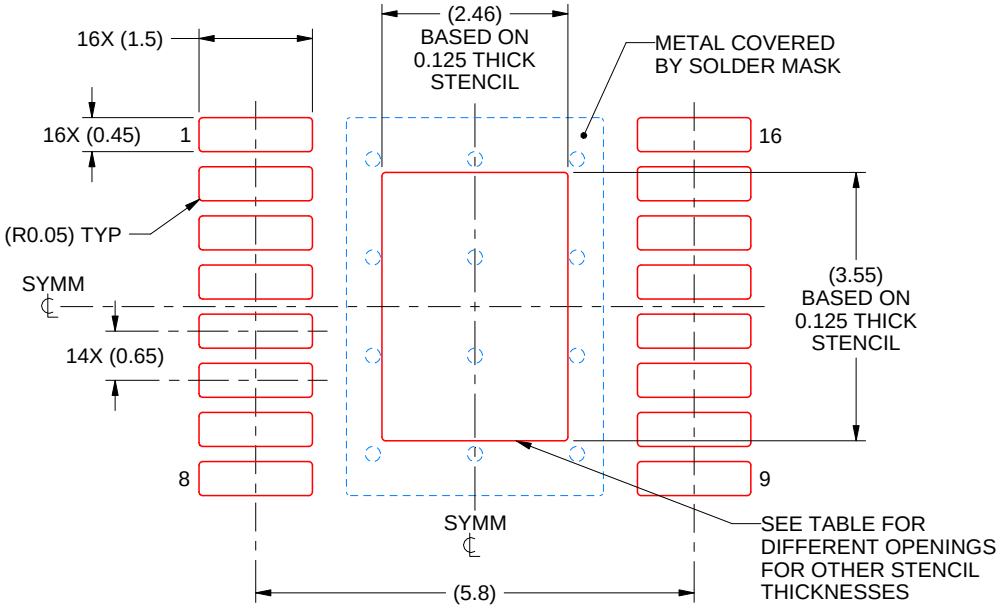

SOLDER PASTE EXAMPLE
BASED ON 0.125 mm THICK STENCIL
SCALE: 10X

STENCIL THICKNESS	SOLDER STENCIL OPENING
0.1	2.75 X 3.97
0.125	2.46 X 3.55 (SHOWN)
0.15	2.25 X 3.24
0.175	2.08 X 3.00

4223595/A 03/2017

NOTES: (continued)

10. Laser cutting apertures with trapezoidal walls and rounded corners may offer better paste release. IPC-7525 may have alternate design recommendations.
11. Board assembly site may have different recommendations for stencil design.

IMPORTANT NOTICE

Texas Instruments Incorporated (TI) reserves the right to make corrections, enhancements, improvements and other changes to its semiconductor products and services per JESD46, latest issue, and to discontinue any product or service per JESD48, latest issue. Buyers should obtain the latest relevant information before placing orders and should verify that such information is current and complete.

TI's published terms of sale for semiconductor products (http://www.ti.com/sc/docs/stdterms.htm) apply to the sale of packaged integrated circuit products that TI has qualified and released to market. Additional terms may apply to the use or sale of other types of TI products and services.

Reproduction of significant portions of TI information in TI data sheets is permissible only if reproduction is without alteration and is accompanied by all associated warranties, conditions, limitations, and notices. TI is not responsible or liable for such reproduced documentation. Information of third parties may be subject to additional restrictions. Resale of TI products or services with statements different from or beyond the parameters stated by TI for that product or service voids all express and any implied warranties for the associated TI product or service and is an unfair and deceptive business practice. TI is not responsible or liable for any such statements.

Buyers and others who are developing systems that incorporate TI products (collectively, "Designers") understand and agree that Designers remain responsible for using their independent analysis, evaluation and judgment in designing their applications and that Designers have full and exclusive responsibility to assure the safety of Designers' applications and compliance of their applications (and of all TI products used in or for Designers' applications) with all applicable regulations, laws and other applicable requirements. Designer represents that, with respect to their applications, Designer has all the necessary expertise to create and implement safeguards that (1) anticipate dangerous consequences of failures, (2) monitor failures and their consequences, and (3) lessen the likelihood of failures that might cause harm and take appropriate actions. Designer agrees that prior to using or distributing any applications that include TI products, Designer will thoroughly test such applications and the functionality of such TI products as used in such applications.

TI's provision of technical, application or other design advice, quality characterization, reliability data or other services or information, including, but not limited to, reference designs and materials relating to evaluation modules, (collectively, "TI Resources") are intended to assist designers who are developing applications that incorporate TI products; by downloading, accessing or using TI Resources in any way, Designer (individually or, if Designer is acting on behalf of a company, Designer's company) agrees to use any particular TI Resource solely for this purpose and subject to the terms of this Notice.

TI's provision of TI Resources does not expand or otherwise alter TI's applicable published warranties or warranty disclaimers for TI products, and no additional obligations or liabilities arise from TI providing such TI Resources. TI reserves the right to make corrections, enhancements, improvements and other changes to its TI Resources. TI has not conducted any testing other than that specifically described in the published documentation for a particular TI Resource.

Designer is authorized to use, copy and modify any individual TI Resource only in connection with the development of applications that include the TI product(s) identified in such TI Resource. NO OTHER LICENSE, EXPRESS OR IMPLIED, BY ESTOPPEL OR OTHERWISE TO ANY OTHER TI INTELLECTUAL PROPERTY RIGHT, AND NO LICENSE TO ANY TECHNOLOGY OR INTELLECTUAL PROPERTY RIGHT OF TI OR ANY THIRD PARTY IS GRANTED HEREIN, including but not limited to any patent right, copyright, mask work right, or other intellectual property right relating to any combination, machine, or process in which TI products or services are used. Information regarding or referencing third-party products or services does not constitute a license to use such products or services, or a warranty or endorsement thereof. Use of TI Resources may require a license from a third party under the patents or other intellectual property of the third party, or a license from TI under the patents or other intellectual property of TI.

TI RESOURCES ARE PROVIDED "AS IS" AND WITH ALL FAULTS. TI DISCLAIMS ALL OTHER WARRANTIES OR REPRESENTATIONS, EXPRESS OR IMPLIED, REGARDING RESOURCES OR USE THEREOF, INCLUDING BUT NOT LIMITED TO ACCURACY OR COMPLETENESS, TITLE, ANY EPIDEMIC FAILURE WARRANTY AND ANY IMPLIED WARRANTIES OF MERCHANTABILITY, FITNESS FOR A PARTICULAR PURPOSE, AND NON-INFRINGEMENT OF ANY THIRD PARTY INTELLECTUAL PROPERTY RIGHTS. TI SHALL NOT BE LIABLE FOR AND SHALL NOT DEFEND OR INDEMNIFY DESIGNER AGAINST ANY CLAIM, INCLUDING BUT NOT LIMITED TO ANY INFRINGEMENT CLAIM THAT RELATES TO OR IS BASED ON ANY COMBINATION OF PRODUCTS EVEN IF DESCRIBED IN TI RESOURCES OR OTHERWISE. IN NO EVENT SHALL TI BE LIABLE FOR ANY ACTUAL, DIRECT, SPECIAL, COLLATERAL, INDIRECT, PUNITIVE, INCIDENTAL, CONSEQUENTIAL OR EXEMPLARY DAMAGES IN CONNECTION WITH OR ARISING OUT OF TI RESOURCES OR USE THEREOF, AND REGARDLESS OF WHETHER TI HAS BEEN ADVISED OF THE POSSIBILITY OF SUCH DAMAGES.

Unless TI has explicitly designated an individual product as meeting the requirements of a particular industry standard (e.g., ISO/TS 16949 and ISO 26262), TI is not responsible for any failure to meet such industry standard requirements.

Where TI specifically promotes products as facilitating functional safety or as compliant with industry functional safety standards, such products are intended to help enable customers to design and create their own applications that meet applicable functional safety standards and requirements. Using products in an application does not by itself establish any safety features in the application. Designers must ensure compliance with safety-related requirements and standards applicable to their applications. Designer may not use any TI products in life-critical medical equipment unless authorized officers of the parties have executed a special contract specifically governing such use. Life-critical medical equipment is medical equipment where failure of such equipment would cause serious bodily injury or death (e.g., life support, pacemakers, defibrillators, heart pumps, neurostimulators, and implantables). Such equipment includes, without limitation, all medical devices identified by the U.S. Food and Drug Administration as Class III devices and equivalent classifications outside the U.S.

TI may expressly designate certain products as completing a particular qualification (e.g., Q100, Military Grade, or Enhanced Product). Designers agree that it has the necessary expertise to select the product with the appropriate qualification designation for their applications and that proper product selection is at Designers' own risk. Designers are solely responsible for compliance with all legal and regulatory requirements in connection with such selection.

Designer will fully indemnify TI and its representatives against any damages, costs, losses, and/or liabilities arising out of Designer's non-compliance with the terms and provisions of this Notice.

Mailing Address: Texas Instruments, Post Office Box 655303, Dallas, Texas 75265
Copyright © 2018, Texas Instruments Incorporated