Type C Connectors (Continued)

Female Connectors, Solder

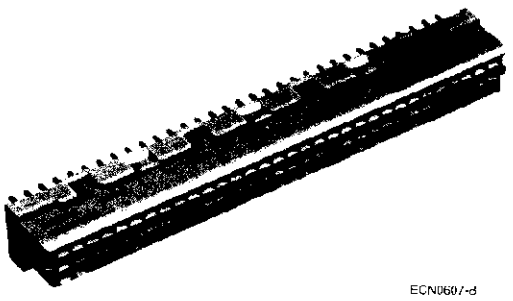

ECN0607-d

(Coding Version Shown)

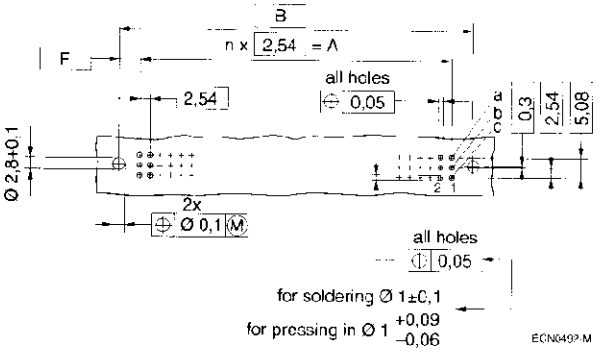

Mounting Holes (component side) for Printed Circuits

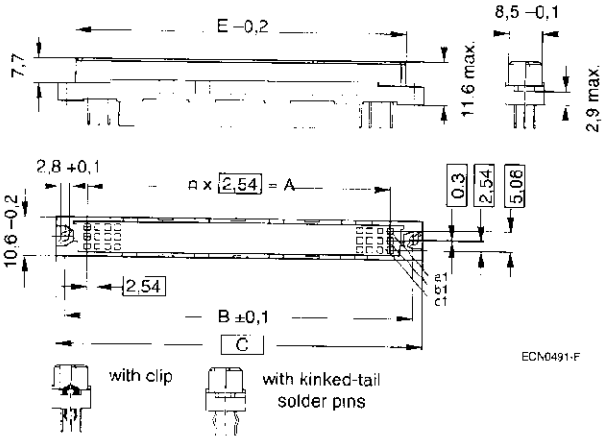

Schematic Depiction in Accordance with DIN

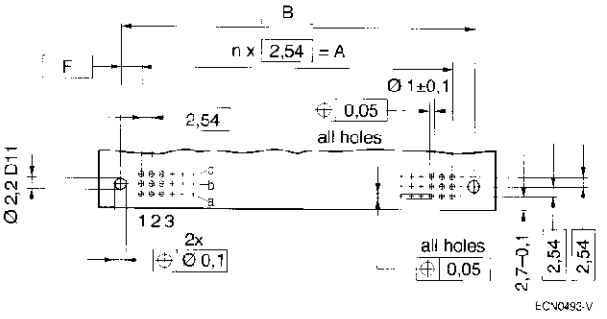

Mounting Holes (component side) for Printed Circuits.
(For connectors with soldering pins angled at 90°.)

Type	n	A	B	C	D	E	F
C	31	78.74	90	95	85	85	5,63
C/2	15	38.1	50	55	45	44,36	5,95
C/3	9	22.86	34,76	39,76	30	29,12	5,95

Dimensions in mm

Part Number Table
IEC Type C Female Connectors

	No. Positions	Rows	DIN Level	Connector	Length	Part Number
Third Length C/3	30	A,B,C	II	Straight	2.9 mm	8-1393640-0
					4.5 mm	2-1393641-0[1]
Half Length C/2	48	A,B,C	II	Straight	2.9 mm	8-1393640-5[1]
					4.5 mm	2-1393641-5[1]
Full Length C	64	A,C	II	Straight	2.9 mm	9-1393640-3[1]
					4.5 mm	3-1393641-5[1]
	96	A,B,C	II	Straight	2.9 mm	9-1393640-2[1]
					4.5 mm	3-1393641-1[1]

[1]Available with mounting clip by request.

Note: Performance Level I available upon request.