Power MOSFET

PRODUCT SUMMARY		
V_{DS} (V)	600	
$R_{DS(on)}$ (Ω)	V_{GS} = 10 V	3.9
Q_g (Max.) (nC)	18	
Q_{gs} (nC)	3.0	
Q_{gd} (nC)	8.9	
Configuration	Single	

FEATURES

- **Halogen-free According to IEC 61249-2-21 Definition**
- Dynamic dV/dt Rating
- Repetitive Avalanche Rated
- Available in Tape and Reel
- Fast Switching
- Ease of Paralleling
- Compliant to RoHS Directive 2002/95/EC

Pb Available
RoHS* COMPLIANT
HALOGEN FREE Available

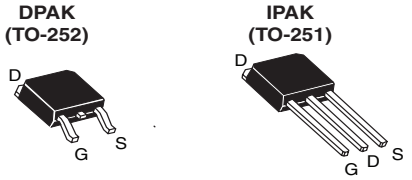

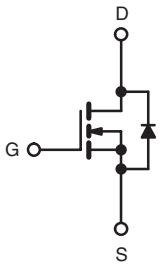

N-Channel MOSFET

ABSOLUTE MAXIMUM RATINGS T_C = 25 °C, unless otherwise noted					
PARAMETER			SYMBOL	LIMIT	UNIT
Drain-Source Voltage			V_{DS}	600	V
Gate-Source Voltage			V_{GS}	± 20	
Continuous Drain Current	V_{GS} at 10 V	T_C = 25 °C	I_D	2.0	A
		T_C = 100 °C		1.3	
Pulsed Drain Current[a]			I_{DM}	8.0	
Linear Derating Factor				0.33	W/°C
Linear Derating Factor (PCB Mount)[e]				0.020	
Single Pulse Avalanche Energy[b]			E_{AS}	74	mJ
Repetitive Avalanche Current[a]			I_{AR}	2.0	A
Repetitive Avalanche Energy[a]			E_{AR}	4.2	mJ
Maximum Power Dissipation	T_C = 25 °C		P_D	42	W
Maximum Power Dissipation (PCB Mount)[e]	T_A = 25 °C			2.5	
Peak Diode Recovery dV/dt[c]			dV/dt	3.0	V/ns
Operating Junction and Storage Temperature Range			T_J, T_{stg}	- 55 to + 150	°C
Soldering Recommendations (Peak Temperature)	for 10 s			260[d]	

Notes

a. Repetitive rating; pulse width limited by maximum junction temperature (see fig. 11).
b. V_{DD} = 50 V, starting T_J = 25 °C, L = 37 mH, R_g = 25 Ω, I_{AS} = 2.0 A (see fig. 12).
c. $I_{SD} \leq 2.0$ A, dI/dt ≤ 40 A/μs, $V_{DD} \leq V_{DS}$, $T_J \leq 150$ °C.
d. 1.6 mm from case.
e. When mounted on 1" square PCB (FR-4 or G-10 material).

* Pb containing terminations are not RoHS compliant, exemptions may apply

THERMAL RESISTANCE RATINGS					
PARAMETER	**SYMBOL**	**MIN.**	**TYP.**	**MAX.**	**UNIT**
Maximum Junction-to-Ambient	R_{thJA}	-	-	110	°C/W
Maximum Junction-to-Ambient (PCB Mount)[a]	R_{thJA}	-	-	50	
Maximum Junction-to-Case (Drain)	R_{thJC}	-	-	3.0	

Note

a. When mounted on 1" square PCB (FR-4 or G-10 material).

SPECIFICATIONS T_J = 25 °C, unless otherwise noted							
PARAMETER	**SYMBOL**	**TEST CONDITIONS**		**MIN.**	**TYP.**	**MAX.**	**UNIT**
Static							
Drain-Source Breakdown Voltage	V_{DS}	V_{GS} = 0 V, I_D = 250 μA		600	-	-	V
V_{DS} Temperature Coefficient	$\Delta V_{DS}/T_J$	Reference to 25 °C, I_D = 1 mA		-	0.88	-	V/°C
Gate-Source Threshold Voltage	$V_{GS(th)}$	V_{DS} = V_{GS}, I_D = 250 μA		2.0	-	4.0	V
Gate-Source Leakage	I_{GSS}	V_{GS} = ± 20 V		-	-	± 100	nA
Zero Gate Voltage Drain Current	I_{DSS}	V_{DS} = 600 V, V_{GS} = 0 V		-	-	100	μA
		V_{DS} = 480 V, V_{GS} = 0 V, T_J = 125 °C		-	-	500	
Drain-Source On-State Resistance	$R_{DS(on)}$	V_{GS} = 10 V	I_D = 1.2 A[b]	-	-	3.9	Ω
Forward Transconductance	g_{fs}	V_{DS} = 50 V, I_D = 1.2 A		1.4	-	-	S
Dynamic							
Input Capacitance	C_{iss}	V_{GS} = 0 V, V_{DS} = - 25 V, f = 1.0 MHz, see fig. 5		-	350	-	pF
Output Capacitance	C_{oss}			-	48	-	
Reverse Transfer Capacitance	C_{rss}			-	8.6	-	
Total Gate Charge	Q_g	V_{GS} = 10 V	I_D = 2.0 A, V_{DS} = 360 V, see fig. 6 and 13[b]	-	-	18	nC
Gate-Source Charge	Q_{gs}			-	-	3.0	
Gate-Drain Charge	Q_{gd}			-	-	8.9	
Turn-On Delay Time	$t_{d(on)}$	V_{DD} = 300 V, I_D = 2.0 A, R_g = 18 Ω, R_D = 135 Ω, see fig. 10[b]		-	10	-	ns
Rise Time	t_r			-	23	-	
Turn-Off Delay Time	$t_{d(off)}$			-	30	-	
Fall Time	t_f			-	25	-	
Internal Drain Inductance	L_D	Between lead, 6 mm (0.25") from package and center of die contact 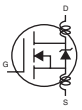		-	4.5	-	nH
Internal Source Inductance	L_S			-	7.5	-	
Drain-Source Body Diode Characteristics							
Continuous Source-Drain Diode Current	I_S	MOSFET symbol showing the integral reverse p - n junction diode		-	-	2.0	A
Pulsed Diode Forward Current[a]	I_{SM}			-	-	8.0	
Body Diode Voltage	V_{SD}	T_J = 25 °C, I_S = 2.0 A, V_{GS} = 0 V[b]		-	-	1.6	V
Body Diode Reverse Recovery Time	t_{rr}	T_J = 25 °C, I_F = 2.0 A, dI/dt = 100 A/μs[b]		-	290	580	ns
Body Diode Reverse Recovery Charge	Q_{rr}			-	0.67	1.3	μC
Forward Turn-On Time	t_{on}	Intrinsic turn-on time is negligible (turn-on is dominated by L_S and L_D)					

Notes

a. Repetitive rating; pulse width limited by maximum junction temperature (see fig. 11).

b. Pulse width ≤ 300 μs; duty cycle ≤ 2 %.

TYPICAL CHARACTERISTICS 25 °C, unless otherwise noted

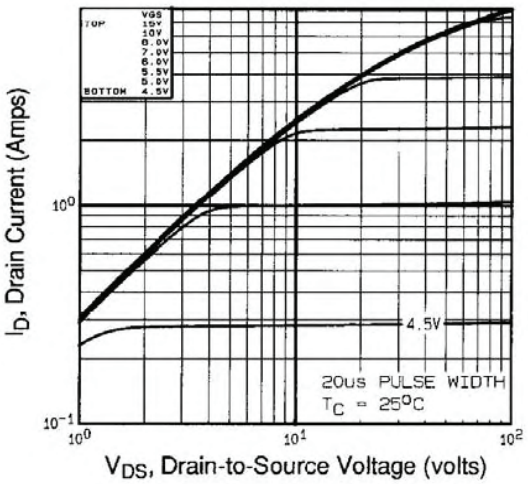

Fig. 1 - Typical Output Characteristics, T_C = 25 °C

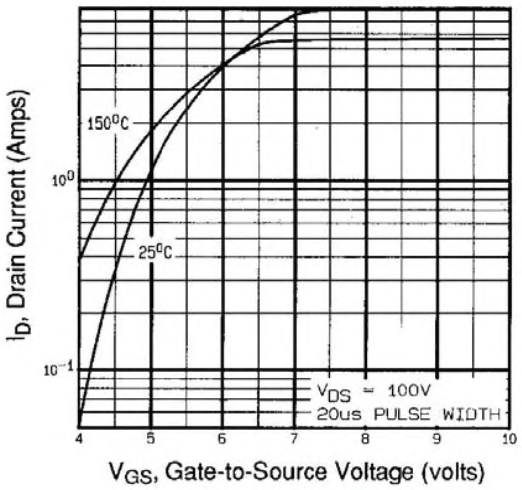

Fig. 3 - Typical Transfer Characteristics

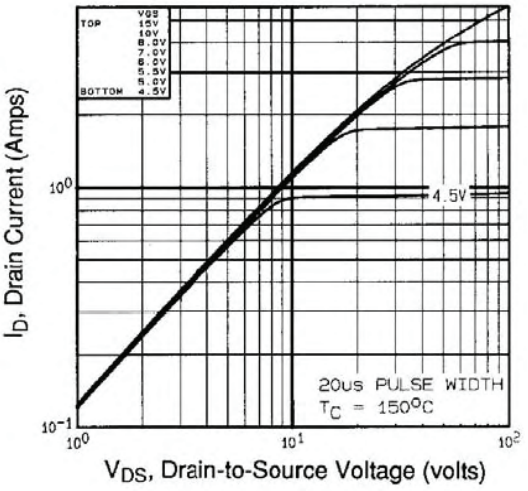

Fig. 2 - Typical Output Characteristics, T_C = 150 °C

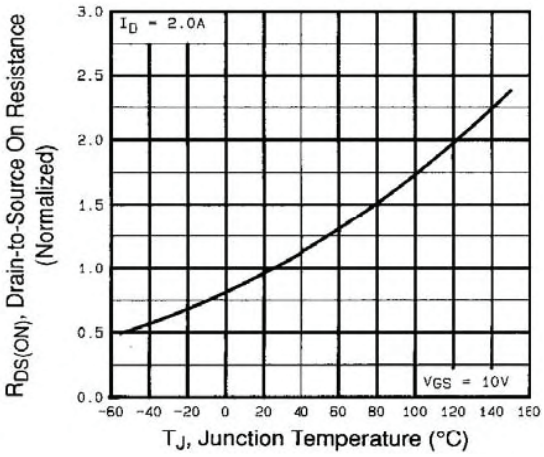

Fig. 4 - Normalized On-Resistance vs. Temperature

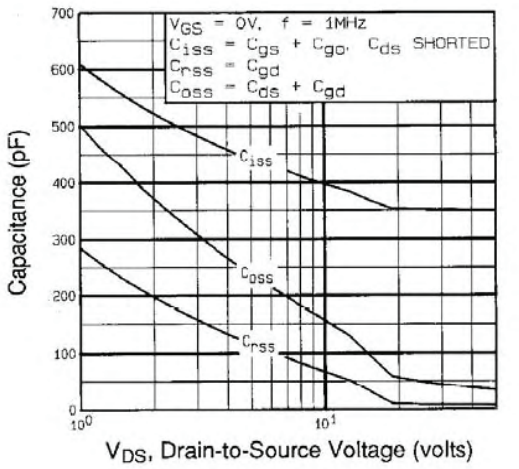

Fig. 5 - Typical Capacitance vs. Drain-to-Source Voltage

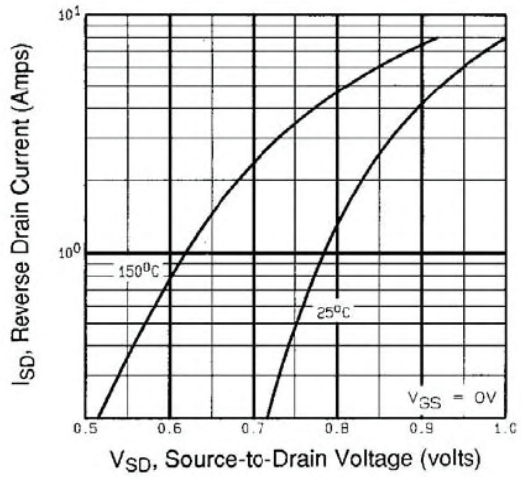

Fig. 7 - Typical Source-Drain Diode Forward Voltage

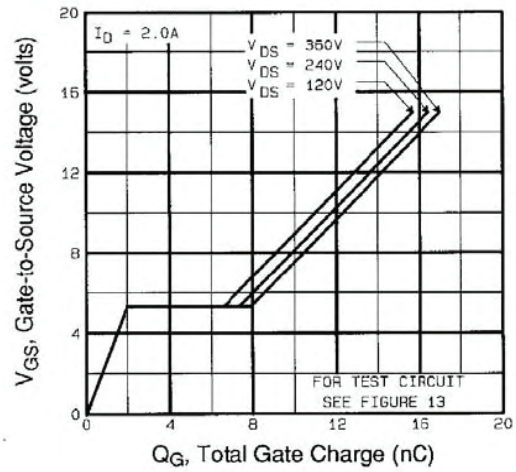

Fig. 6 - Typical Gate Charge vs. Gate-to-Source Voltage

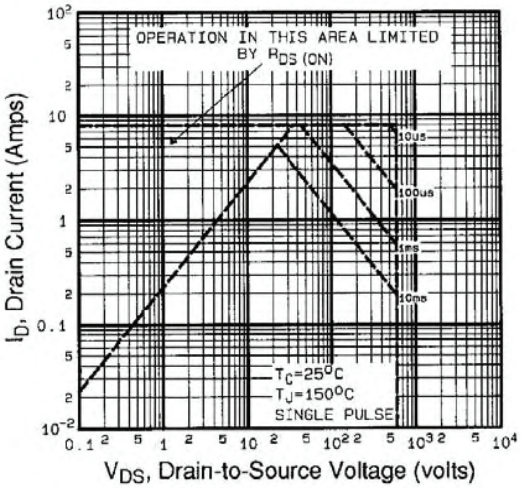

Fig. 8 - Maximum Safe Operating Area

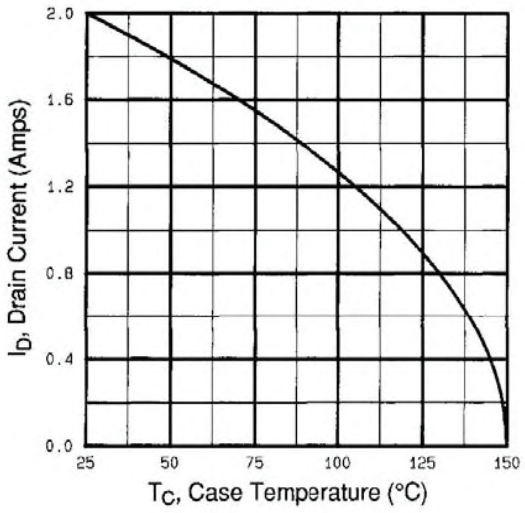

Fig. 9 - Maximum Drain Current vs. Case Temperature

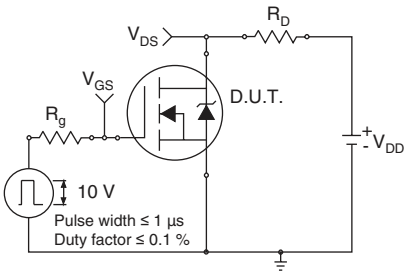

Fig. 10a - Switching Time Test Circuit

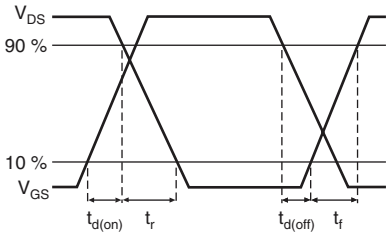

Fig. 10b - Switching Time Waveforms

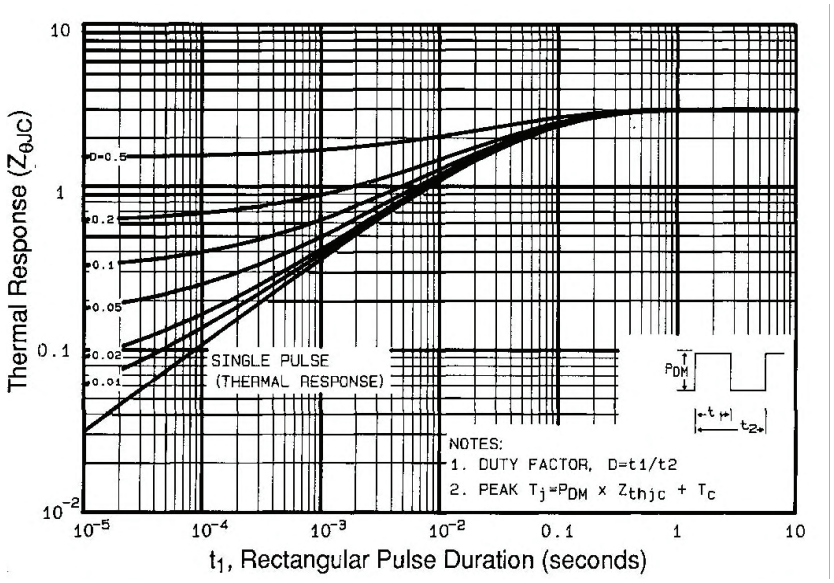

Fig. 11 - Maximum Effective Transient Thermal Impedance, Junction-to-Case

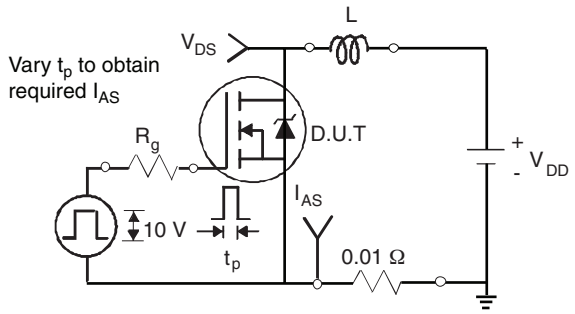

Fig. 12a - Unclamped Inductive Test Circuit

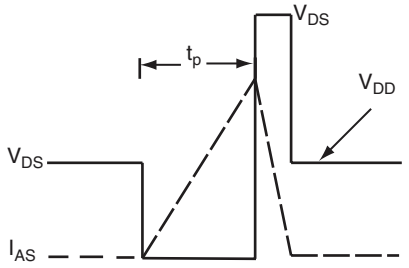

Fig. 12b - Unclamped Inductive Waveforms

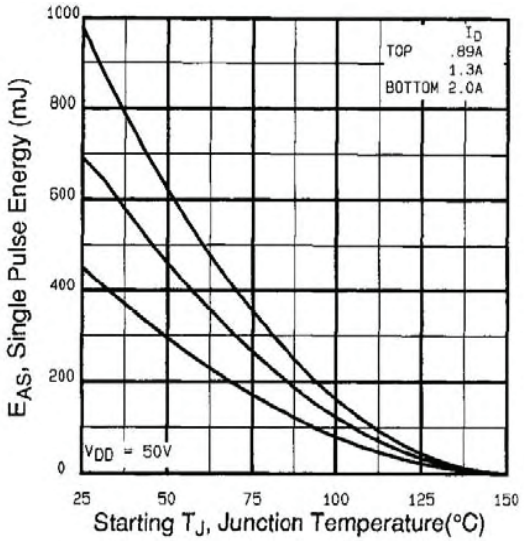

Fig. 12c - Maximum Avalanche Energy vs. Drain Current

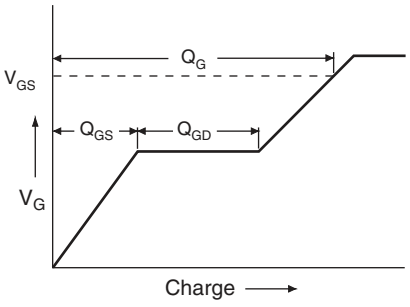

Fig. 13a - Basic Gate Charge Waveform

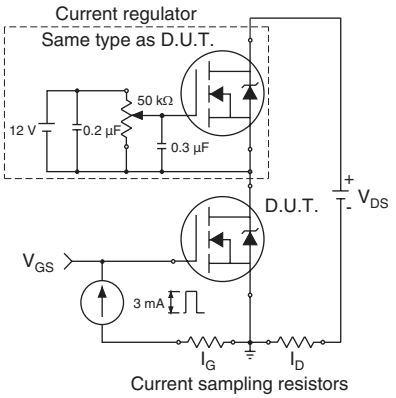

Fig. 13b - Gate Charge Test Circuit

Peak Diode Recovery dV/dt Test Circuit

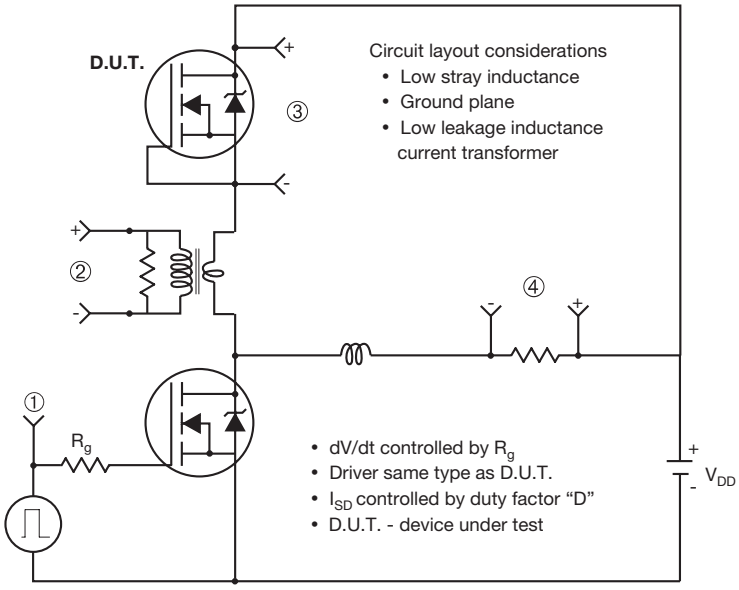

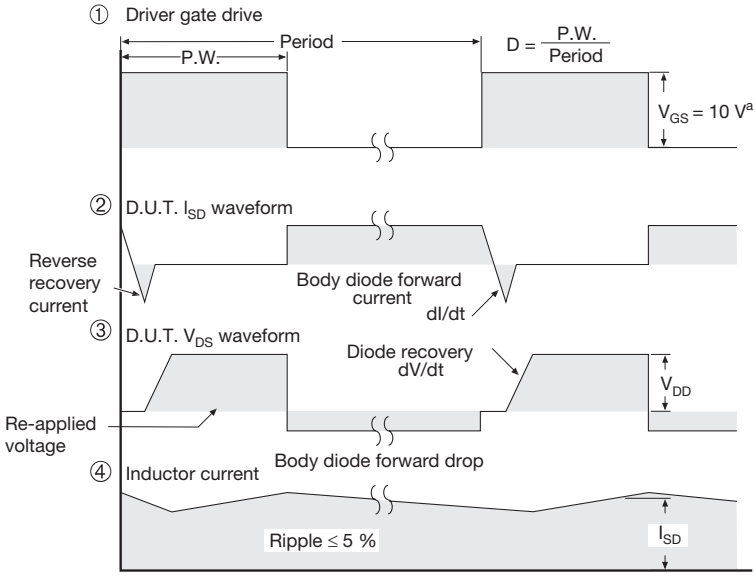

Note

a. V_{GS} = 5 V for logic level devices

Fig. 14 - For N-Channel

TO-252AA (HIGH VOLTAGE)

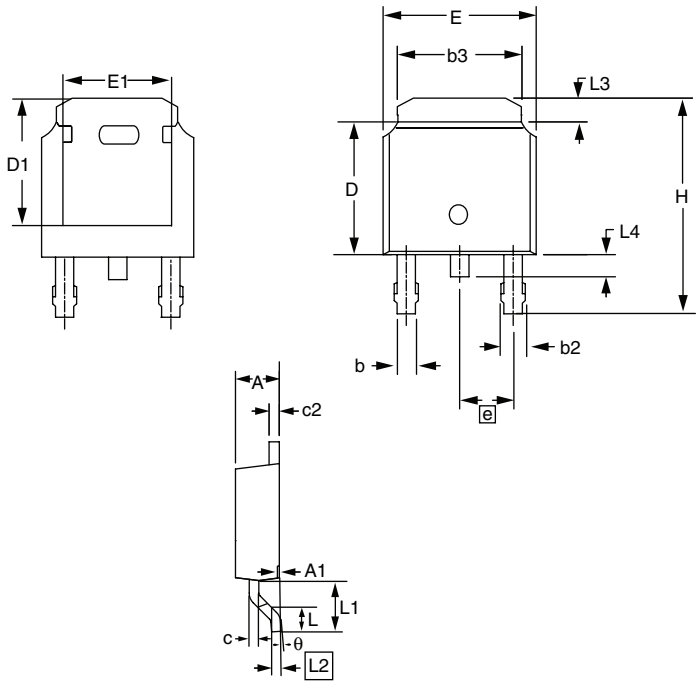

	MILLIMETERS		INCHES	
DIM.	MIN.	MAX.	MIN.	MAX.
E	6.40	6.73	0.252	0.265
L	1.40	1.77	0.055	0.070
L1	2.743 REF		0.108 REF	
L2	0.508 BSC		0.020 BSC	
L3	0.89	1.27	0.035	0.050
L4	0.64	1.01	0.025	0.040
D	6.00	6.22	0.236	0.245
H	9.40	10.40	0.370	0.409
b	0.64	0.88	0.025	0.035
b2	0.77	1.14	0.030	0.045
b3	5.21	5.46	0.205	0.215
e	2.286 BSC		0.090 BSC	
A	2.20	2.38	0.087	0.094
A1	0.00	0.13	0.000	0.005
c	0.45	0.60	0.018	0.024
c2	0.45	0.58	0.018	0.023
D1	5.30	-	0.209	-
E1	4.40	-	0.173	-
θ	0'	10'	0'	10'
ECN: S-81965-Rev. A, 15-Sep-08 DWG: 5973				

Notes

1. Package body sizes exclude mold flash, protrusion or gate burrs. Mold flash, protrusion or gate burrs shall not exceed 0.10 mm per side.
2. Package body sizes determined at the outermost extremes of the plastic body exclusive of mold flash, gate burrs and interlead flash, but including any mismatch between the top and bottom of the plastic body.
3. The package top may be smaller than the package bottom.
4. Dimension "b" does not include dambar protrusion. Allowable dambar protrusion shall be 0.10 mm total in excess of "b" dimension at maximum material condition. The dambar cannot be located on the lower radius of the foot.

TO-251AA (HIGH VOLTAGE)

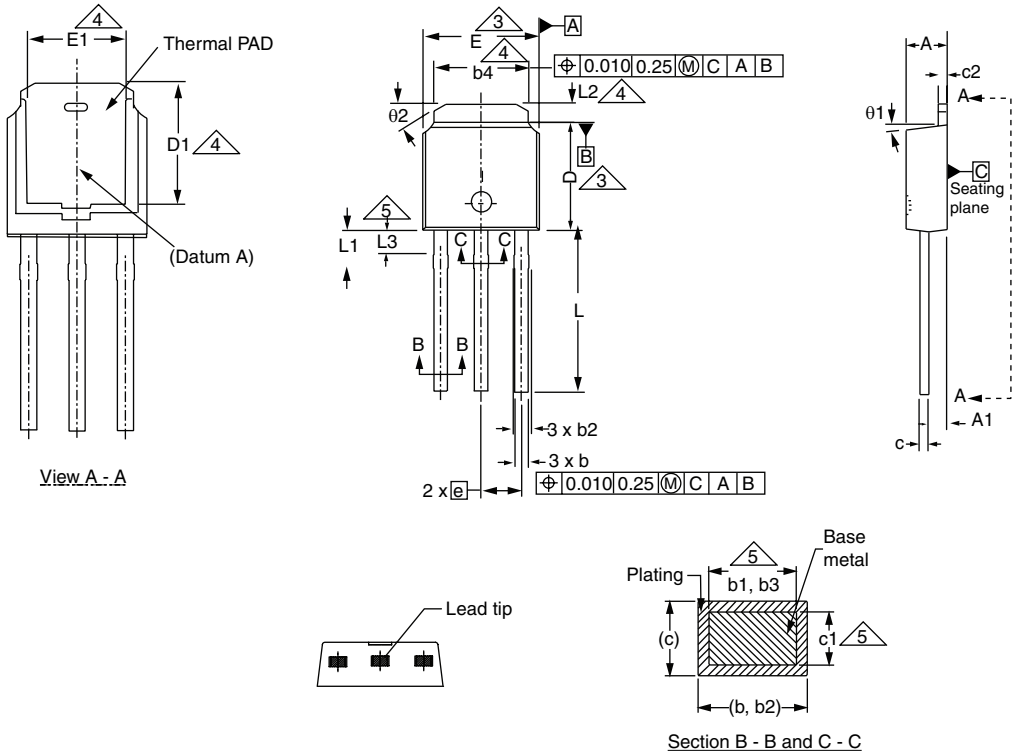

	MILLIMETERS		INCHES	
DIM.	MIN.	MAX.	MIN.	MAX.
A	2.18	2.39	0.086	0.094
A1	0.89	1.14	0.035	0.045
b	0.64	0.89	0.025	0.035
b1	0.65	0.79	0.026	0.031
b2	0.76	1.14	0.030	0.045
b3	0.76	1.04	0.030	0.041
b4	4.95	5.46	0.195	0.215
c	0.46	0.61	0.018	0.024
c1	0.41	0.56	0.016	0.022
c2	0.46	0.86	0.018	0.034
D	5.97	6.22	0.235	0.245

	MILLIMETERS		INCHES	
DIM.	MIN.	MAX.	MIN.	MAX.
D1	5.21	-	0.205	-
E	6.35	6.73	0.250	0.265
E1	4.32	-	0.170	-
e	2.29 BSC		2.29 BSC	
L	8.89	9.65	0.350	0.380
L1	1.91	2.29	0.075	0.090
L2	0.89	1.27	0.035	0.050
L3	1.14	1.52	0.045	0.060
θ1	0'	15'	0'	15'
θ2	25'	35'	25'	35'

ECN: S-82111-Rev. A, 15-Sep-08
DWG: 5968

Notes

1. Dimensioning and tolerancing per ASME Y14.5M-1994.
2. Dimension are shown in inches and millimeters.
3. Dimension D and E do not include mold flash. Mold flash shall not exceed 0.13 mm (0.005") per side. These dimensions are measured at the outermost extremes of the plastic body.
4. Thermal pad contour optional with dimensions b4, L2, E1 and D1.
5. Lead dimension uncontrolled in L3.
6. Dimension b1, b3 and c1 apply to base metal only.
7. Outline conforms to JEDEC outline TO-251AA.

RECOMMENDED MINIMUM PADS FOR DPAK (TO-252)

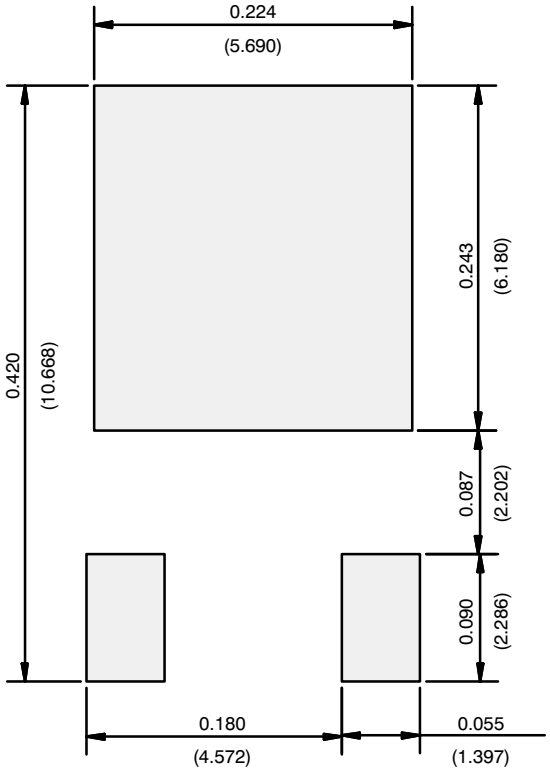

Recommended Minimum Pads
Dimensions in Inches/(mm)

Return to Index

Disclaimer

ALL PRODUCT, PRODUCT SPECIFICATIONS AND DATA ARE SUBJECT TO CHANGE WITHOUT NOTICE TO IMPROVE RELIABILITY, FUNCTION OR DESIGN OR OTHERWISE.

Din-Tek Intertechnology, Inc., its affiliates, agents, and employees, and all persons acting on its or their behalf (collectively, "Din-Tek"), disclaim any and all liability for any errors, inaccuracies or incompleteness contained in any datasheet or in any other disclosure relating to any product.

Din-Tek makes no warranty, representation or guarantee regarding the suitability of the products for any particular purpose or the continuing production of any product. To the maximum extent permitted by applicable law, Din-Tek disclaims (i) any and all liability arising out of the application or use of any product, (ii) any and all liability, including without limitation special, consequential or incidental damages, and (iii) any and all implied warranties, including warranties of fitness for particular purpose, non-infringement and merchantability.

Statements regarding the suitability of products for certain types of applications are based on Din-Tek's knowledge of typical requirements that are often placed on Din-Tek products in generic applications. Such statements are not binding statements about the suitability of products for a particular application. It is the customer's responsibility to validate that a particular product with the properties described in the product specification is suitable for use in a particular application. Parameters provided in datasheets and/or specifications may vary in different applications and performance may vary over time. All operating parameters, including typical parameters, must be validated for each customer application by the customer's technical experts. Product specifications do not expand or otherwise modify Din-Tek's terms and conditions of purchase, including but not limited to the warranty expressed therein.

Except as expressly indicated in writing, Din-Tek products are not designed for use in medical, life-saving, or life-sustaining applications or for any other application in which the failure of the Din-Tek product could result in personal injury or death. Customers using or selling Din-Tek products not expressly indicated for use in such applications do so at their own risk. Please contact authorized Din-Tek personnel to obtain written terms and conditions regarding products designed for such applications.

No license, express or implied, by estoppel or otherwise, to any intellectual property rights is granted by this document or by any conduct of Din-Tek. Product names and markings noted herein may be trademarks of their respective owners.

Material Category Policy

Din-Tek Intertechnology, Inc. hereby certifies that all its products that are identified as RoHS-Compliant fulfill the definitions and restrictions defined under Directive 2011/65/EU of The European Parliament and of the Council of June 8, 2011 on the restriction of the use of certain hazardous substances in electrical and electronic equipment (EEE) - recast, unless otherwise specified as non-compliant.

Please note that some Din-Tek documentation may still make reference to RoHS Directive 2002/95/EC. We confirm that all the products identified as being compliant to Directive 2002/95/EC conform to Directive 2011/65/EU.

Din-Tek Intertechnology, Inc. hereby certifies that all its products that are identified as Halogen-Free follow Halogen-Free requirements as per JEDEC JS709A standards. Please note that some Din-Tek documentation may still make reference to the IEC 61249-2-21 definition. We confirm that all the products identified as being compliant to IEC 61249-2-21 conform to JEDEC JS709A standards.