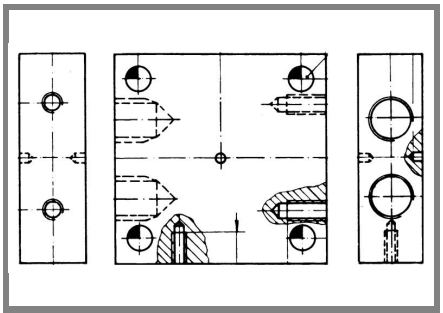

Heatsinks

Standard lengths	n	b / d Ø	R_{thcw} (H_2O: V_W/t; Δp) $R_{th(case - cooling water)}$	R_{thmw} (H_2O: V_W/t; Δp) $R_{th(thermal trip - cooling water)}$	w
		mm	K/W	K/W	kg
2 x WK 33 V_W/t: 4 l/min Δp: 45 mbar		2 x 19 2 x 25	0,134 0,105		1,28

Liquid cooling for capsule devices

WK 33

Publish Data

Features

- Intended for capsule devices
- Designed for water/liquid cooling

Dimensions in mm

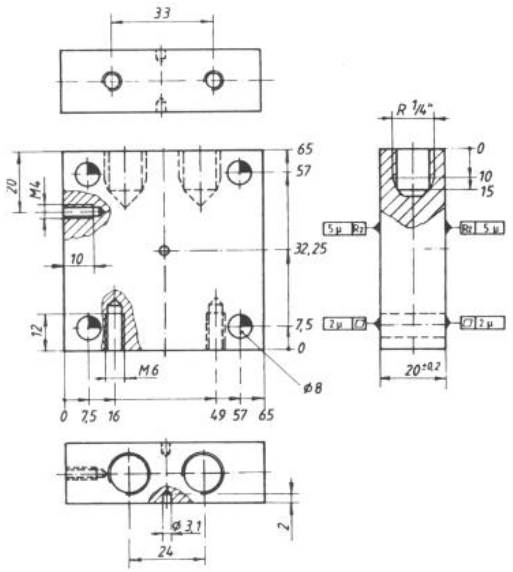

WK 33 general profile dimensions (w = 0,64 kg)

Dimensions in mm

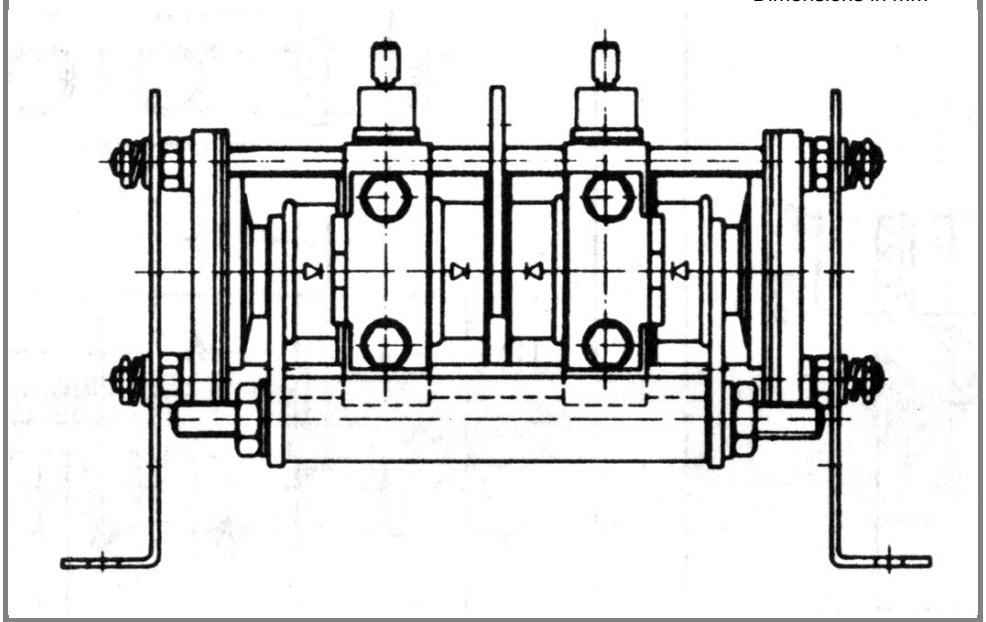

Example setup using heatsink WK 33 for cooling of capsules

 © by SEMIKRON

 © by SEMIKRON