SLLS121D – AUGUST 1990 – REVISED APRIL 1998

- **Meets or Exceeds ANSI Standards EIA/TIA-422-B and RS-485 and ITU Recommendation V.11**
- **High-Speed Advanced Low-Power Schottky Circuitry**
- **Designed for 20-MBaud Operation in Both Serial and Parallel Applications**
- **Designed for Multipoint Transmission on Long Bus Lines in Noisy Environments**
- **Low Supply-Current Requirements: 55 mA Max**
- **Wide Positive and Negative Input/Output Bus-Voltage Ranges**
- **Driver Output Capacity . . . ±60 mA**
- **Thermal Shutdown Protection**
- **Driver Positive and Negative Current Limiting**
- **Logically Interchangeable With SN75172**

N PACKAGE
(TOP VIEW)

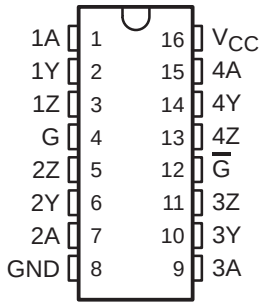

DW PACKAGE
(TOP VIEW)

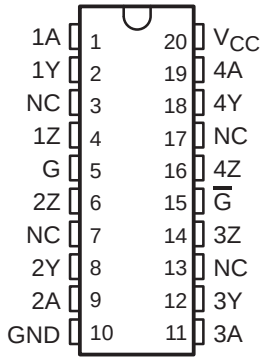

NC – No internal connection

description

The SN75ALS172A comprises four line drivers with 3-state differential outputs. They are designed to meet the requirements of ANSI Standards EIA/TIA-422-B and RS-485 and ITU Recommendation V.11. This device is optimized for balanced multipoint bus transmission at rates of up to 20 Mbaud. Each driver features wide positive and negative common-mode output voltage ranges, making it suitable for party-line applications in noisy environments.

The SN75ALS172A provides positive- and negative-current limiting and thermal shutdown for protection from line-fault conditions on the transmission bus line. Shutdown occurs at a junction temperature of approximately 150°C.

The SN75ALS172A is characterized for operation from 0°C to 70°C.

Please be aware that an important notice concerning availability, standard warranty, and use in critical applications of Texas Instruments semiconductor products and disclaimers thereto appears at the end of this data sheet.

PRODUCTION DATA information is current as of publication date. Products conform to specifications per the terms of Texas Instruments standard warranty. Production processing does not necessarily include testing of all parameters.

Copyright © 1998, Texas Instruments Incorporated

FUNCTION TABLE
(each driver)

INPUT A	ENABLES G	ENABLES $\overline{G}$	OUTPUTS Y	OUTPUTS Z
H	H	X	H	L
L	H	X	L	H
H	X	L	H	L
L	X	L	L	H
X	L	H	Z	Z

H = high level, L = low level, X = irrelevant,
Z = high impedance (off)

logic symbol†

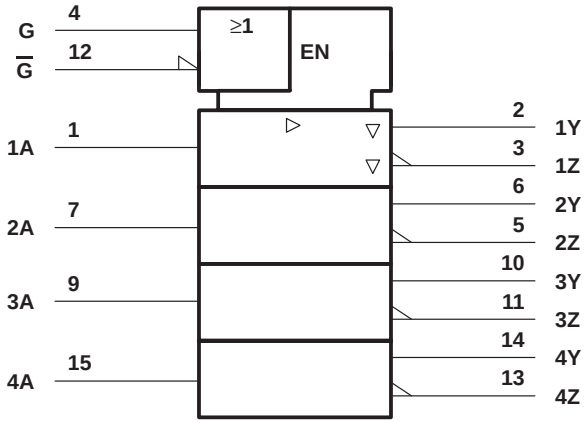

† This symbol is in accordance with ANSI/IEEE Std 91-1984 and IEC Publication 617-12.
Pin numbers shown are for the N package.

logic diagram (positive logic)

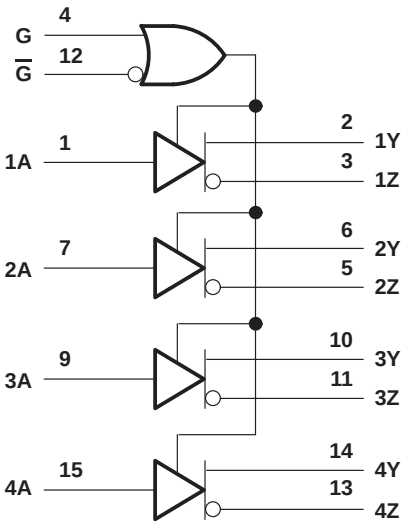

Pin numbers shown are for the N package.

schematics of inputs and outputs

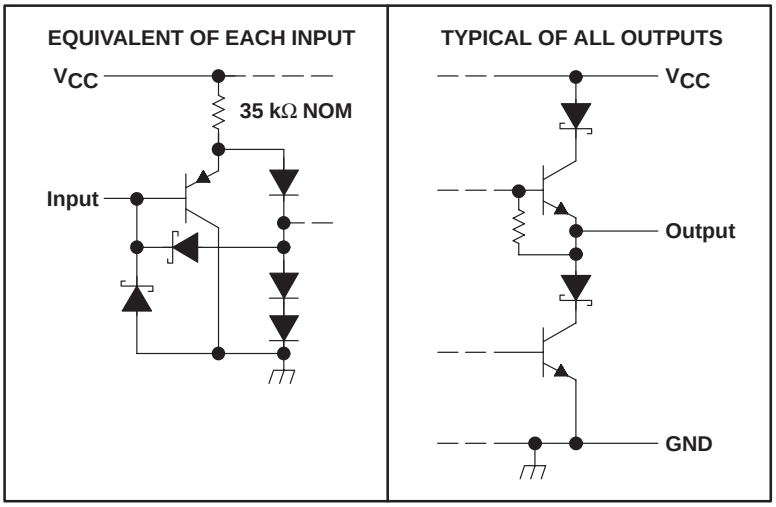

absolute maximum ratings over operating free-air temperature range (unless otherwise noted)†

Supply voltage, V_{CC} (see Note 1) . . . . . 7 V
Input voltage, V_I . . . . . 7 V
Output voltage range, V_O . . . . . –9 V to 14 V
Continuous total dissipation . . . . . See Dissipation Rating Table
Storage temperature range, T_{stg} . . . . . –65°C to 150°C
Lead temperature 1,6 mm (1/16 inch) from case for 10 seconds . . . . . 260°C

† Stresses beyond those listed under "absolute maximum ratings" may cause permanent damage to the device. These are stress ratings only, and functional operation of the device at these or any other conditions beyond those indicated under "recommended operating conditions" is not implied. Exposure to absolute-maximum-rated conditions for extended periods may affect device reliability.

NOTE 1: All voltage values are with respect to network ground terminal.

DISSIPATION RATING TABLE

PACKAGE	$T_A \le 25°C$ POWER RATING	DERATING FACTOR	$T_A = 70°C$ POWER RATING	$T_A = 85°C$ POWER RATING
DW	1125 mW	9 mW/°C	720 mW	585 mW
N	1150 mW	9.2 mW/°C	736 mW	598 mW

recommended operating conditions

	MIN	NOM	MAX	UNIT
Supply voltage, V_{CC}	4.75	5	5.25	V
High-level input voltage, V_{IH}	2			V
Low-level input voltage, V_{IL}			0.8	V
Common-mode output voltage, V_{OC}			12 –7	V
High-level output current, I_{OH}			–60	mA
Low-level output current, I_{OL}			60	mA
Operating free-air temperature, T_A	0		70	°C

electrical characteristics over recommended ranges of supply voltage and operating free-air temperature (unless otherwise noted)

PARAMETER		TEST CONDITIONS		MIN	TYP†	MAX	UNIT
V_{IK}	Input clamp voltage	I_I = –18 mA				–1.5	V
V_O	Output voltage	I_O = 0		0		6	V
$\|V_{OD1}\|$	Differential output voltage	I_O = 0		1.5		6	V
$\|V_{OD2}\|$	Differential output voltage	V_{CC} = 5 V, R_L = 100 Ω, See Figure 1		1/2 V_{OD1} or 2‡			V
		R_L = 54 Ω, See Figure 1		1.5	2.5	5	
$\|V_{OD3}\|$	Differential output voltage	See Note 2		1.5		5	V
$\Delta\|V_{OD}\|$	Change in magnitude of differential output voltage§	R_L = 54 Ω or 100 Ω, See Figure 1				±0.2	V
V_{OC}	Common-mode output voltage¶	R_L = 54 Ω or 100 Ω, See Figure 1				3 –1	V
$\Delta\|V_{OC}\|$	Change in magnitude of common-mode output voltage§	R_L = 54 Ω or 100 Ω, See Figure 1				±0.2	V
I_O	Output current with power off	V_{CC} = 0, V_O = –7 V to 12 V				±100	µA
I_{OZ}	High-impedance-state output current	V_O = –7 V to 12 V				±100	µA
I_{IH}	High-level input current	V_I = 2.7 V				20	µA
I_{IL}	Low-level input current	V_I = 0.4 V				–100	µA
I_{OS}	Short-circuit output current	V_O = –7 V to 12 V				±250	mA
I_{CC}	Supply current (all drivers)	No load	Outputs enabled		36	55	mA
			Outputs disabled		15	30	

† All typical values are at V_{CC} = 5 V and T_A = 25°C.
‡ The minimum V_{OD2} with a 100-Ω load is either 1/2 V_{OD1} or 2 V, whichever is greater.
§ $\Delta|V_{OD}|$ and $\Delta|V_{OC}|$ are the changes in magnitude of V_{OD} and V_{OC}, respectively, that occur when the input is changed from a high level to a low level.
¶ In ANSI Standard EIA/TIA-422-B, V_{OC}, which is the average of the two output voltages with respect to ground, is called output offset voltage, V_{OS}.
NOTE 2: See EIA Standard RS-485, Figure 3-5, Test Termination Measurement 2.

switching characteristics over recommended ranges of supply voltage and operating free-air temperature, C_L = 50 pF

PARAMETER		TEST CONDITIONS		MIN	TYP†	MAX	UNIT
$t_{d(OD)}$	Differential-output delay time	R_L = 54 Ω,	See Figure 2	9	15	22	ns
t_{PZH}	Output enable time to high level	R_L = 110 Ω,	See Figure 3	30	45	70	ns
t_{PZL}	Output enable time to low level	R_L = 110 Ω,	See Figure 4	25	40	65	ns
t_{PHZ}	Output disable time from high level	R_L = 110 Ω,	See Figure 3	10	20	35	ns
t_{PLZ}	Output disable time from low level	R_L = 110 Ω,	See Figure 4	10	30	45	ns

† All typical values are at V_{CC} = 5 V and T_A = 25°C.

PARAMETER MEASUREMENT INFORMATION

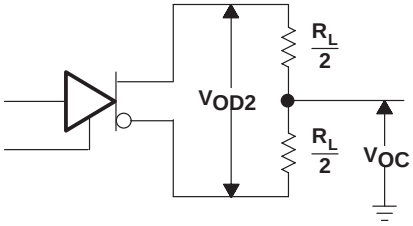

Figure 1. Differential and Common-Mode Output Voltages

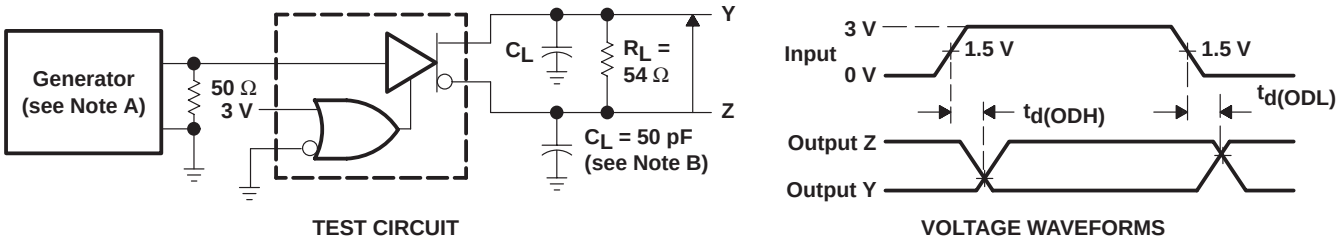

TEST CIRCUIT VOLTAGE WAVEFORMS

NOTES: A. The input pulse is supplied by a generator having the following characteristics: PRR = 1 MHz, Z_O = 50 Ω, duty cycle = 50%, $t_f \leq 5$ ns, $t_r \leq 5$ ns.
B. C_L includes probe and stray capacitance.

Figure 2. Differential Output Test Circuit and Voltage Waveforms

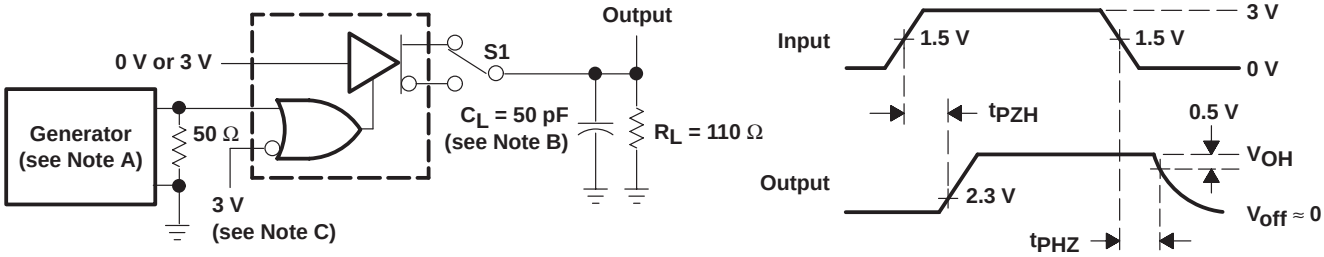

TEST CIRCUIT VOLTAGE WAVEFORMS

NOTES: A. The input pulse is supplied by a generator having the following characteristics: PRR = 1 MHz, Z_O = 50 Ω, duty cycle = 50%, $t_f \leq 5$ ns, $t_r \leq 5$ ns.
B. C_L includes probe and stray capacitance.
C. To test the active-low enable $\overline{G}$, ground G and apply an inverted input waveform to $\overline{G}$.

Figure 3. Test Circuit and Voltage Waveforms, t_{PZH} and t_{PHZ}

PARAMETER MEASUREMENT INFORMATION

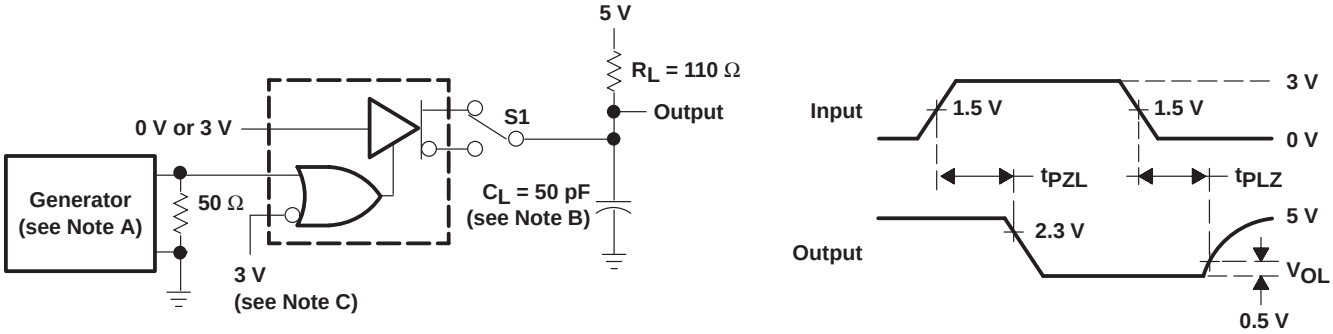

TEST CIRCUIT

VOLTAGE WAVEFORMS

NOTES: A. The input pulse is supplied by a generator having the following characteristics: PRR = 1 MHz, Z_O = 50 Ω, duty cycle = 50%, $t_f \leq 5$ ns, $t_r \leq 5$ ns.
B. C_L includes probe and stray capacitance.
C. To test the active-low enable $\overline{G}$, ground G and apply an inverted input waveform to $\overline{G}$.

Figure 4. Test Circuit and Voltage Waveforms, t_{PZL} and t_{PLZ}

PACKAGING INFORMATION

Orderable Device	Status (1)	Package Type	Package Drawing	Pins	Package Qty	Eco Plan (2)	Lead/Ball Finish (6)	MSL Peak Temp (3)	Op Temp (°C)	Device Marking (4/5)	Samples
SN75ALS172ADW	ACTIVE	SOIC	DW	20	25	Green (RoHS & no Sb/Br)	CU NIPDAU	Level-1-260C-UNLIM	0 to 70	75ALS172A	Samples
SN75ALS172ADWG4	ACTIVE	SOIC	DW	20	25	Green (RoHS & no Sb/Br)	CU NIPDAU	Level-1-260C-UNLIM	0 to 70	75ALS172A	Samples
SN75ALS172ADWR	ACTIVE	SOIC	DW	20	2000	Green (RoHS & no Sb/Br)	CU NIPDAU	Level-1-260C-UNLIM	0 to 70	75ALS172A	Samples
SN75ALS172AN	ACTIVE	PDIP	N	16	25	Pb-Free (RoHS)	CU NIPDAU	N / A for Pkg Type	0 to 70	SN75ALS172AN	Samples

(1) The marketing status values are defined as follows:
ACTIVE: Product device recommended for new designs.
LIFEBUY: TI has announced that the device will be discontinued, and a lifetime-buy period is in effect.
NRND: Not recommended for new designs. Device is in production to support existing customers, but TI does not recommend using this part in a new design.
PREVIEW: Device has been announced but is not in production. Samples may or may not be available.
OBSOLETE: TI has discontinued the production of the device.

(2) Eco Plan - The planned eco-friendly classification: Pb-Free (RoHS), Pb-Free (RoHS Exempt), or Green (RoHS & no Sb/Br) - please check http://www.ti.com/productcontent for the latest availability information and additional product content details.
TBD: The Pb-Free/Green conversion plan has not been defined.
Pb-Free (RoHS): TI's terms "Lead-Free" or "Pb-Free" mean semiconductor products that are compatible with the current RoHS requirements for all 6 substances, including the requirement that lead not exceed 0.1% by weight in homogeneous materials. Where designed to be soldered at high temperatures, TI Pb-Free products are suitable for use in specified lead-free processes.
Pb-Free (RoHS Exempt): This component has a RoHS exemption for either 1) lead-based flip-chip solder bumps used between the die and package, or 2) lead-based die adhesive used between the die and leadframe. The component is otherwise considered Pb-Free (RoHS compatible) as defined above.
Green (RoHS & no Sb/Br): TI defines "Green" to mean Pb-Free (RoHS compatible), and free of Bromine (Br) and Antimony (Sb) based flame retardants (Br or Sb do not exceed 0.1% by weight in homogeneous material)

(3) MSL, Peak Temp. - The Moisture Sensitivity Level rating according to the JEDEC industry standard classifications, and peak solder temperature.

(4) There may be additional marking, which relates to the logo, the lot trace code information, or the environmental category on the device.

(5) Multiple Device Markings will be inside parentheses. Only one Device Marking contained in parentheses and separated by a "~" will appear on a device. If a line is indented then it is a continuation of the previous line and the two combined represent the entire Device Marking for that device.

(6) Lead/Ball Finish - Orderable Devices may have multiple material finish options. Finish options are separated by a vertical ruled line. Lead/Ball Finish values may wrap to two lines if the finish value exceeds the maximum column width.

Important Information and Disclaimer: The information provided on this page represents TI's knowledge and belief as of the date that it is provided. TI bases its knowledge and belief on information provided by third parties, and makes no representation or warranty as to the accuracy of such information. Efforts are underway to better integrate information from third parties. TI has taken and continues to take reasonable steps to provide representative and accurate information but may not have conducted destructive testing or chemical analysis on incoming materials and chemicals. TI and TI suppliers consider certain information to be proprietary, and thus CAS numbers and other limited information may not be available for release.

In no event shall TI's liability arising out of such information exceed the total purchase price of the TI part(s) at issue in this document sold by TI to Customer on an annual basis.

TAPE AND REEL INFORMATION

REEL DIMENSIONS

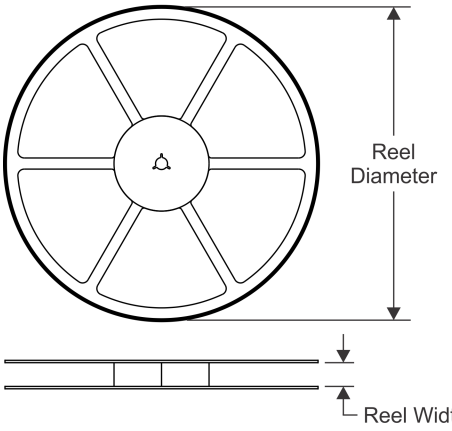

TAPE DIMENSIONS

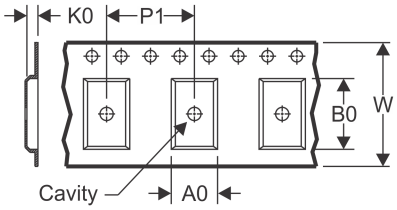

A0	Dimension designed to accommodate the component width
B0	Dimension designed to accommodate the component length
K0	Dimension designed to accommodate the component thickness
W	Overall width of the carrier tape
P1	Pitch between successive cavity centers

QUADRANT ASSIGNMENTS FOR PIN 1 ORIENTATION IN TAPE

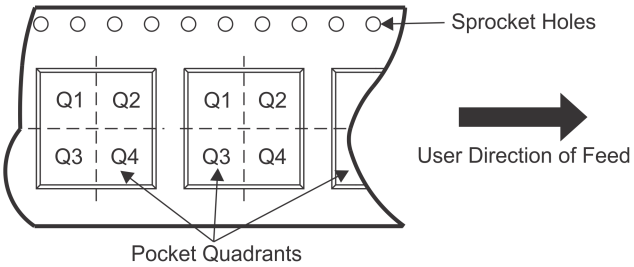

*All dimensions are nominal

Device	Package Type	Package Drawing	Pins	SPQ	Reel Diameter (mm)	Reel Width W1 (mm)	A0 (mm)	B0 (mm)	K0 (mm)	P1 (mm)	W (mm)	Pin1 Quadrant
SN75ALS172ADWR	SOIC	DW	20	2000	330.0	24.4	10.8	13.3	2.7	12.0	24.0	Q1
SN75ALS172ADWR	SOIC	DW	20	2000	330.0	24.4	10.8	13.0	2.7	12.0	24.0	Q1

TAPE AND REEL BOX DIMENSIONS

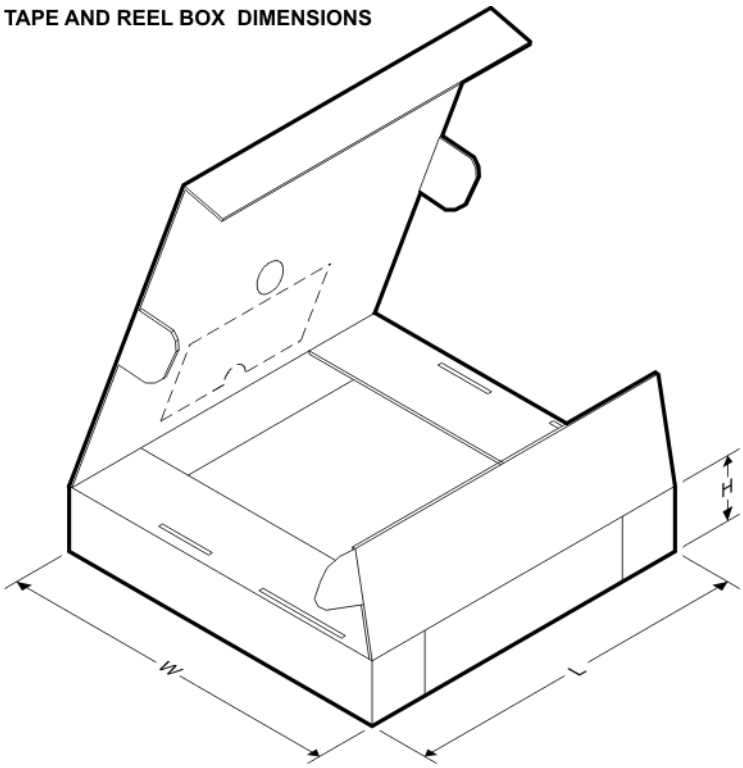

*All dimensions are nominal

Device	Package Type	Package Drawing	Pins	SPQ	Length (mm)	Width (mm)	Height (mm)
SN75ALS172ADWR	SOIC	DW	20	2000	367.0	367.0	45.0
SN75ALS172ADWR	SOIC	DW	20	2000	367.0	367.0	45.0

N (R–PDIP–T**) PLASTIC DUAL–IN–LINE PACKAGE

16 PINS SHOWN

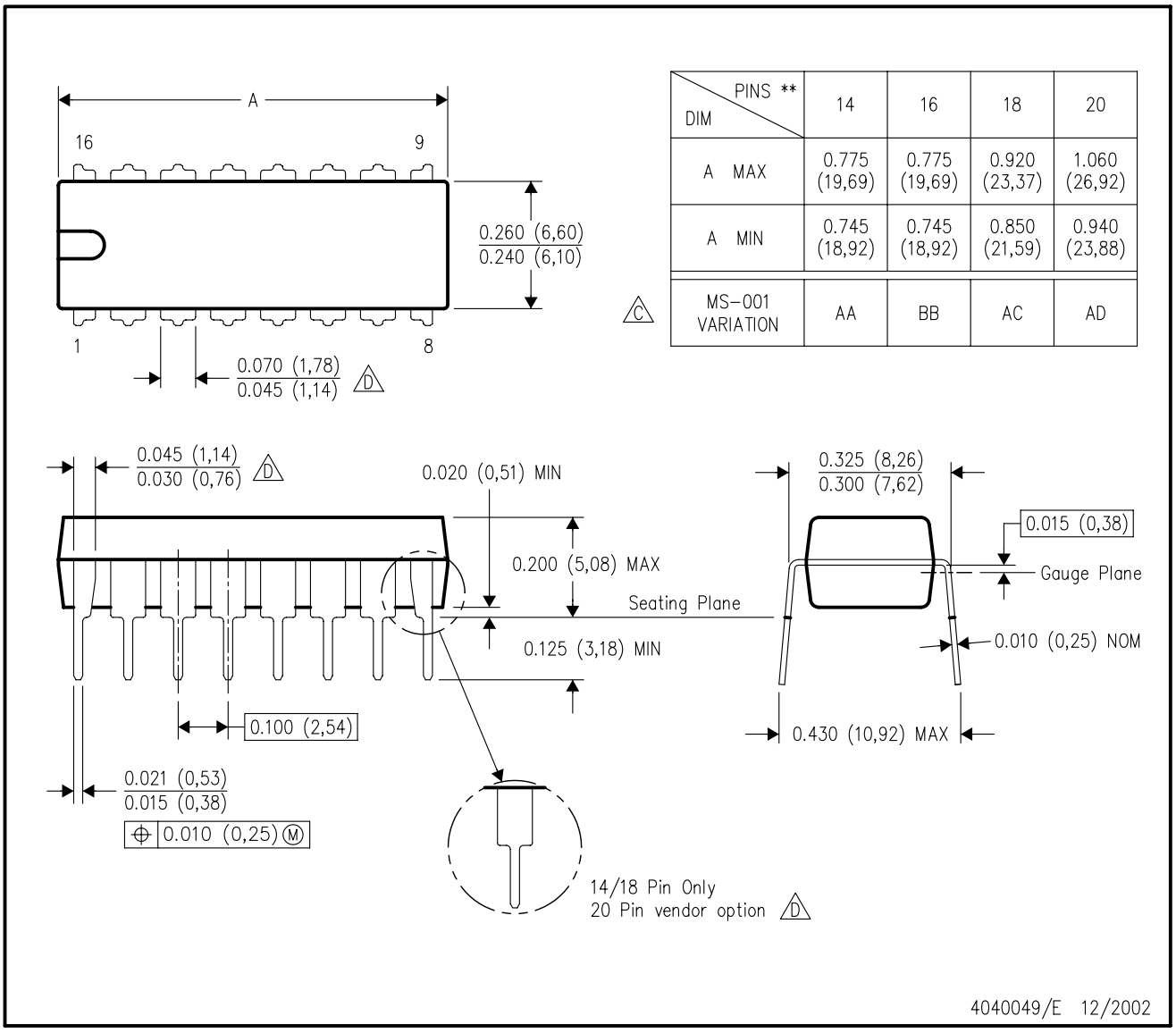

DIM \ PINS **	14	16	18	20
A MAX	0.775 (19,69)	0.775 (19,69)	0.920 (23,37)	1.060 (26,92)
A MIN	0.745 (18,92)	0.745 (18,92)	0.850 (21,59)	0.940 (23,88)
MS–001 VARIATION (C)	AA	BB	AC	AD

NOTES:
A. All linear dimensions are in inches (millimeters).
B. This drawing is subject to change without notice.
C. Falls within JEDEC MS–001, except 18 and 20 pin minimum body length (Dim A).
D. The 20 pin end lead shoulder width is a vendor option, either half or full width.

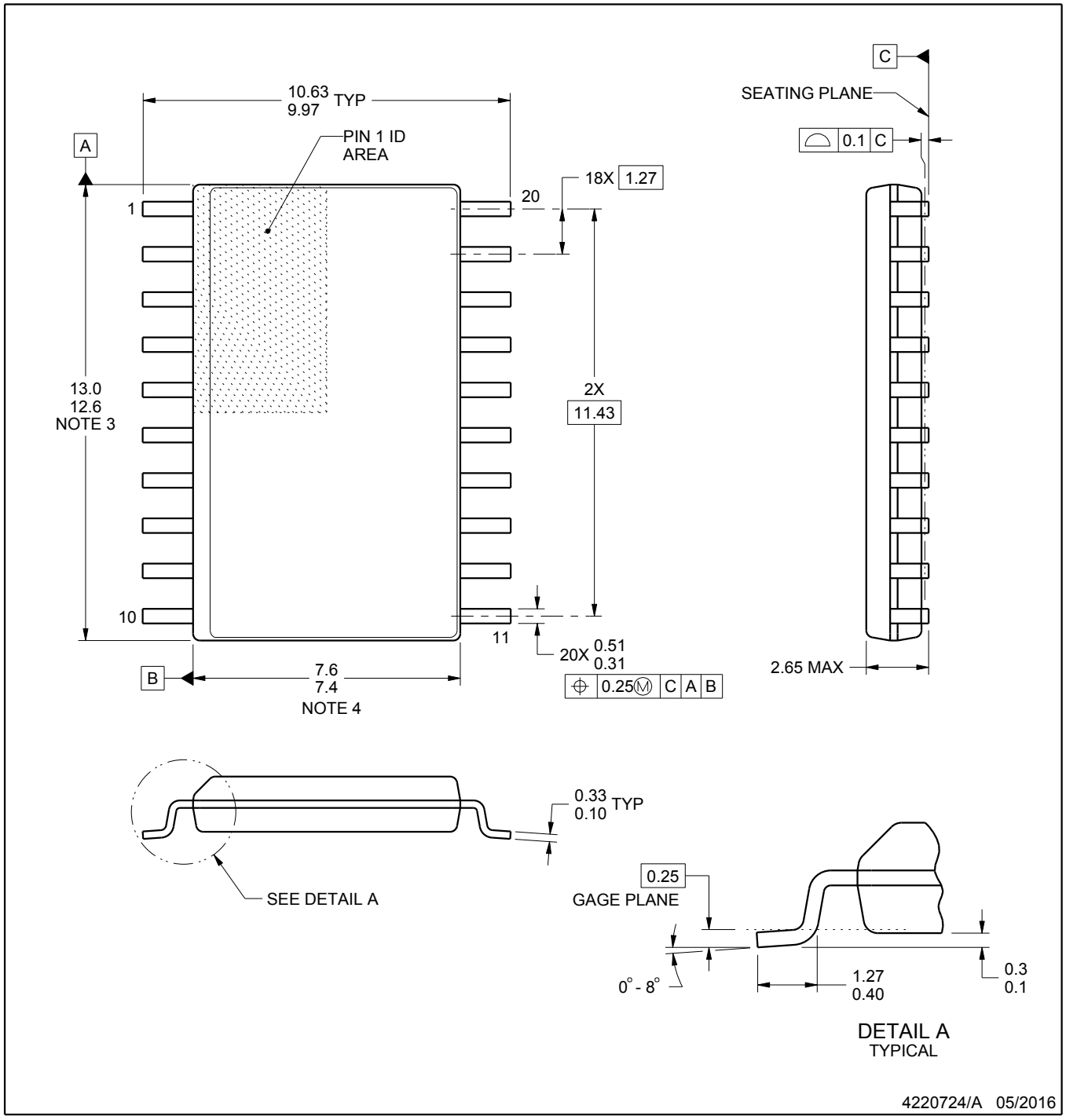

NOTES:

1. All linear dimensions are in millimeters. Dimensions in parenthesis are for reference only. Dimensioning and tolerancing per ASME Y14.5M.
2. This drawing is subject to change without notice.
3. This dimension does not include mold flash, protrusions, or gate burrs. Mold flash, protrusions, or gate burrs shall not exceed 0.15 mm per side.
4. This dimension does not include interlead flash. Interlead flash shall not exceed 0.43 mm per side.
5. Reference JEDEC registration MS-013.

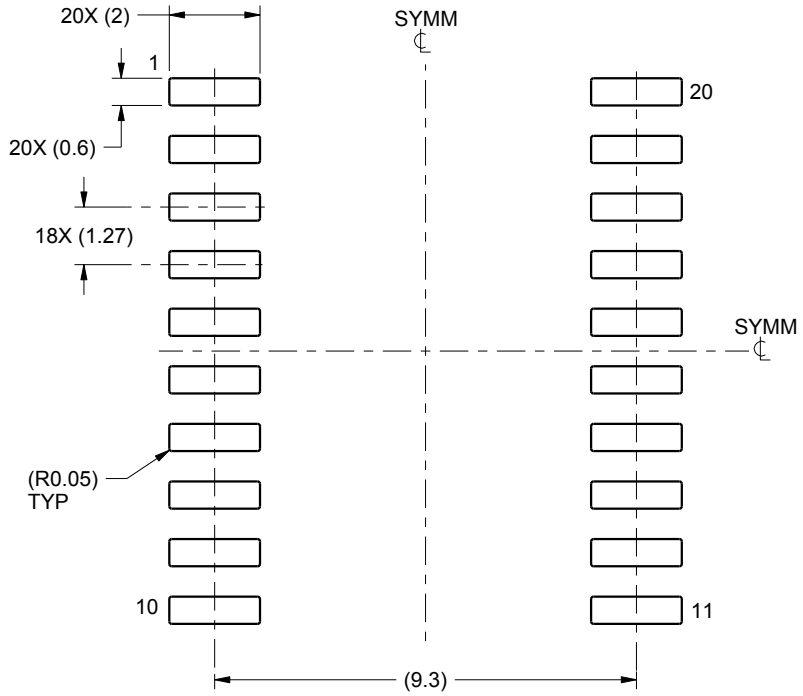

LAND PATTERN EXAMPLE
SCALE:6X

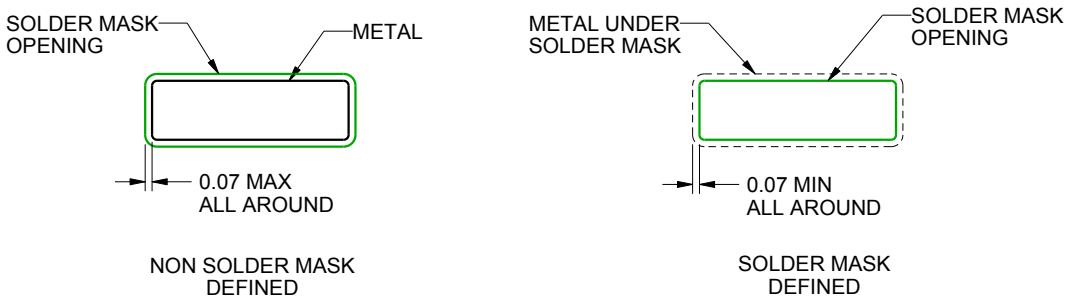

SOLDER MASK DETAILS

4220724/A 05/2016

NOTES: (continued)

6. Publication IPC-7351 may have alternate designs.
7. Solder mask tolerances between and around signal pads can vary based on board fabrication site.

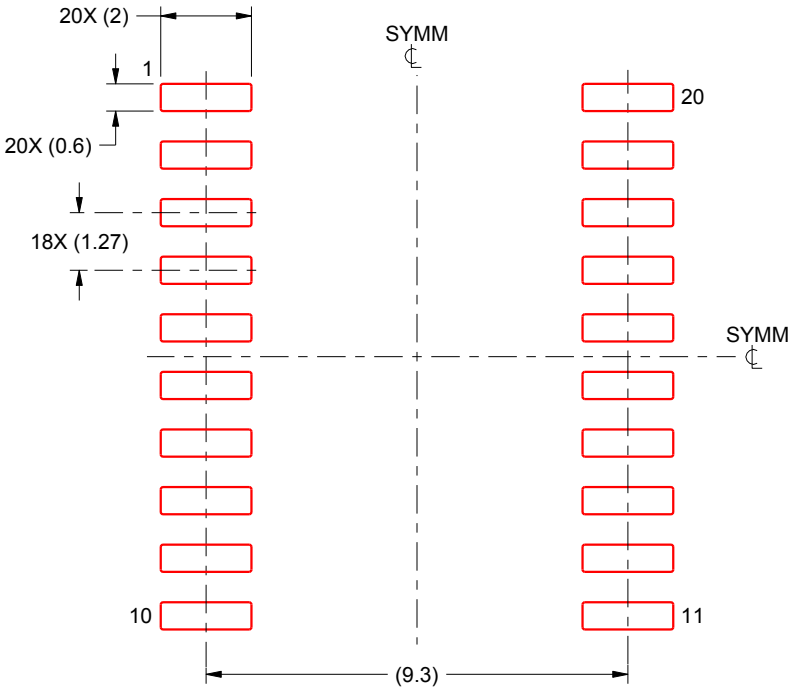

SOLDER PASTE EXAMPLE
BASED ON 0.125 mm THICK STENCIL
SCALE:6X

4220724/A 05/2016

NOTES: (continued)

8. Laser cutting apertures with trapezoidal walls and rounded corners may offer better paste release. IPC-7525 may have alternate design recommendations.
9. Board assembly site may have different recommendations for stencil design.

IMPORTANT NOTICE

Texas Instruments Incorporated and its subsidiaries (TI) reserve the right to make corrections, enhancements, improvements and other changes to its semiconductor products and services per JESD46, latest issue, and to discontinue any product or service per JESD48, latest issue. Buyers should obtain the latest relevant information before placing orders and should verify that such information is current and complete. All semiconductor products (also referred to herein as “components”) are sold subject to TI’s terms and conditions of sale supplied at the time of order acknowledgment.

TI warrants performance of its components to the specifications applicable at the time of sale, in accordance with the warranty in TI’s terms and conditions of sale of semiconductor products. Testing and other quality control techniques are used to the extent TI deems necessary to support this warranty. Except where mandated by applicable law, testing of all parameters of each component is not necessarily performed.

TI assumes no liability for applications assistance or the design of Buyers’ products. Buyers are responsible for their products and applications using TI components. To minimize the risks associated with Buyers’ products and applications, Buyers should provide adequate design and operating safeguards.

TI does not warrant or represent that any license, either express or implied, is granted under any patent right, copyright, mask work right, or other intellectual property right relating to any combination, machine, or process in which TI components or services are used. Information published by TI regarding third-party products or services does not constitute a license to use such products or services or a warranty or endorsement thereof. Use of such information may require a license from a third party under the patents or other intellectual property of the third party, or a license from TI under the patents or other intellectual property of TI.

Reproduction of significant portions of TI information in TI data books or data sheets is permissible only if reproduction is without alteration and is accompanied by all associated warranties, conditions, limitations, and notices. TI is not responsible or liable for such altered documentation. Information of third parties may be subject to additional restrictions.

Resale of TI components or services with statements different from or beyond the parameters stated by TI for that component or service voids all express and any implied warranties for the associated TI component or service and is an unfair and deceptive business practice. TI is not responsible or liable for any such statements.

Buyer acknowledges and agrees that it is solely responsible for compliance with all legal, regulatory and safety-related requirements concerning its products, and any use of TI components in its applications, notwithstanding any applications-related information or support that may be provided by TI. Buyer represents and agrees that it has all the necessary expertise to create and implement safeguards which anticipate dangerous consequences of failures, monitor failures and their consequences, lessen the likelihood of failures that might cause harm and take appropriate remedial actions. Buyer will fully indemnify TI and its representatives against any damages arising out of the use of any TI components in safety-critical applications.

In some cases, TI components may be promoted specifically to facilitate safety-related applications. With such components, TI’s goal is to help enable customers to design and create their own end-product solutions that meet applicable functional safety standards and requirements. Nonetheless, such components are subject to these terms.

No TI components are authorized for use in FDA Class III (or similar life-critical medical equipment) unless authorized officers of the parties have executed a special agreement specifically governing such use.

Only those TI components which TI has specifically designated as military grade or “enhanced plastic” are designed and intended for use in military/aerospace applications or environments. Buyer acknowledges and agrees that any military or aerospace use of TI components which have ***not*** been so designated is solely at the Buyer's risk, and that Buyer is solely responsible for compliance with all legal and regulatory requirements in connection with such use.

TI has specifically designated certain components as meeting ISO/TS16949 requirements, mainly for automotive use. In any case of use of non-designated products, TI will not be responsible for any failure to meet ISO/TS16949.

Products		**Applications**	
Audio	www.ti.com/audio	Automotive and Transportation	www.ti.com/automotive
Amplifiers	amplifier.ti.com	Communications and Telecom	www.ti.com/communications
Data Converters	dataconverter.ti.com	Computers and Peripherals	www.ti.com/computers
DLP® Products	www.dlp.com	Consumer Electronics	www.ti.com/consumer-apps
DSP	dsp.ti.com	Energy and Lighting	www.ti.com/energy
Clocks and Timers	www.ti.com/clocks	Industrial	www.ti.com/industrial
Interface	interface.ti.com	Medical	www.ti.com/medical
Logic	logic.ti.com	Security	www.ti.com/security
Power Mgmt	power.ti.com	Space, Avionics and Defense	www.ti.com/space-avionics-defense
Microcontrollers	microcontroller.ti.com	Video and Imaging	www.ti.com/video
RFID	www.ti-rfid.com		
OMAP Applications Processors	www.ti.com/omap	**TI E2E Community**	e2e.ti.com
Wireless Connectivity	www.ti.com/wirelessconnectivity		

Mailing Address: Texas Instruments, Post Office Box 655303, Dallas, Texas 75265
Copyright © 2016, Texas Instruments Incorporated