STYN208(S) thru STYN1008(S)

Thyristor Discretes(SCRs)

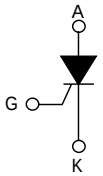

Dimensions TO-220AB

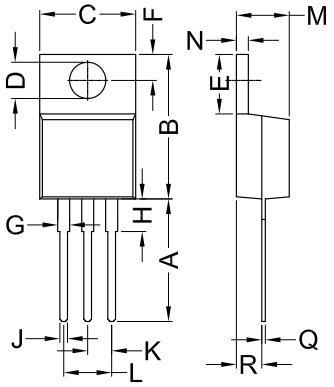

REF.	Millimeter		Inches	
	Min.	Max.	Min.	Max.
A	12.70	13.97	0.500	0.550
B	14.73	16.00	0.580	0.630
C	9.91	10.66	0.390	0.420
D	3.54	4.08	0.139	0.161
E	5.85	6.85	0.230	0.270
F	2.54	3.18	0.100	0.125
G	1.15	1.65	0.045	0.065
H	2.79	5.84	0.110	0.230
J	0.64	1.01	0.025	0.040
K	2.54	BSC	0.100	BSC
L	5.08	BSC	0.200	BSC
M	4.32	4.82	0.170	0.190
N	1.14	1.39	0.045	0.055
Q	0.35	0.56	0.014	0.022
R	2.29	2.79	0.090	0.110

Dimensions TO-263(D^2PAK)

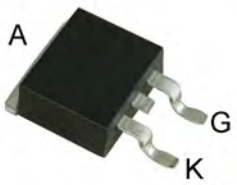

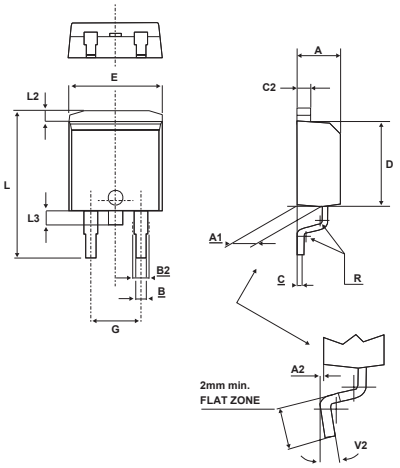

REF.	Millimeters			Inches		
	Min.	Typ.	Max.	Min.	Typ.	Max.
A	4.30		4.60	0.169		0.181
A1	2.49		2.69	0.098		0.106
A2	0.03		0.23	0.001		0.009
B	0.70		0.93	0.027		0.037
B2	1.25	1.40		0.048	0.055	
C	0.45		0.60	0.017		0.024
C2	1.21		1.36	0.047		0.054
D	8.95		9.35	0.352		0.368
E	10.00		10.28	0.393		0.405
G	4.88		5.28	0.192		0.208
L	15.00		15.85	0.590		0.624
L2	1.27		1.40	0.050		0.055
L3	1.40		1.75	0.055		0.069
R		0.40			0.016	
V2	0°		8°	0°		8°

ABSOLUTE RATINGS (limiting values**)**

Symbol	Parameter			Value	Unit
$I_{T(RMS)}$	RMS on-state current (180° conduction angle)		Tc = 110°C	8	A
$IT_{(AV)}$	Average on-state current (180° conduction angle)		Tc = 110°C	5	A
I_{TSM}	Non repetitive surge peak on-state current	tp = 8.3 ms	Tj = 25°C	100	A
		tp = 10 ms		95	
I^2t	I^2t Value for fusing	tp = 10 ms	Tj = 25°C	45	A^2s
dI/dt	Critical rate of rise of on-state current $I_G = 2 \times I_{GT}$, tr £ 100 ns	F = 60 Hz	Tj = 125°C	50	A/µs
I_{GM}	Peak gate current	tp = 20 µs	Tj = 125°C	4	A
$P_{G(AV)}$	Average gate power dissipation		Tj = 125°C	1	W
T_{stg} Tj	Storage junction temperature range Operating junction temperature range			- 40 to + 150 - 40 to + 125	°C
V_{RGM}	Maximum peak reverse gate voltage			5	V

©2008 SIRECTIFIER All rights reserved,
Tel: +86-519-86800000 Fax: +86-519-88019019 E-mail: sales@sirectifier.com
www.sirectifier.com

STYN208(S) thru STYN1008(S)

Thyristor Discretes(SCRs)

ELECTRICAL CHARACTERISTICS (Tj = 25°C, unless otherwise specified)

■ STANDARD

Symbol	Test Conditions			Value	Unit
I_{GT}	V_D = 12 V R_L = 33 W		MIN.	2	mA
			MAX.	15	
V_{GT}			MAX.	1.3	V
V_{GD}	$V_D = V_{DRM}$ R_L = 3.3 kW	Tj = 125°C	MIN.	0.2	V
I_H	I_T = 100 mA Gate open		MAX.	30	mA
I_L	$I_G = 1.2\ I_{GT}$		MAX.	70	mA
dV/dt	V_D = 67 % V_{DRM} Gate open	Tj = 125°C	MIN.	150	V/µs
V_{TM}	I_{TM} = 16 A tp = 380 µs	Tj = 25°C	MAX.	1.6	V
V_{t0}	Threshold voltage	Tj = 125°C	MAX.	0.85	V
R_d	Dynamic resistance	Tj = 125°C	MAX.	46	mΩ
I_{DRM}	$V_{DRM} = V_{RRM}$	Tj = 25°C	MAX.	5	µA
I_{RRM}		Tj = 125°C		2	mA

THERMAL RESISTANCES

Symbol	Parameter			Value	Unit
$R_{th(j-c)}$	Junction to case (DC)			2.0	°C/W
$R_{th(j-a)}$	Junction to ambient (DC)		TO-220AB	60	°C/W
		S = 0.5 cm^2	TO-263	70	

S= copper surface under tab

PRODUCT SELECTOR

Part Number	Voltage (xxx)	Sensitivity	Package
STYNX08S	**200~~1000**	15 mA	TO-263
STYNX08	**200~~1000**	15 mA	TO-220AB

OTHER INFORMATION

Part Number	Marking	Weight	Base Quantity	Packing mode
STYNX08S	STYNX08S	1.50 g	50	Tube
STYNX08	STYNX08	1.90 g	50	Tube

Note: x = voltage

©2008 SIRECTIFIER All rights reserved,
Tel: +86-519-86800000 Fax: +86-519-88019019 E-mail: sales@sirectifier.com www.sirectifier.com