Spezifikation für Freigabe / specification for release

Kunde / customer :
Artikelnummer / part number : **744112**

Bezeichnung : **SPEICHERDROSSEL WE-SI**
description : **TOROIDAL LINE CHOKE WE-SI**

compliant RoHS WÜRTH ELEKTRONIK

WÜRTH ELEKTRONIK

DATUM / DATE : 2009-12-01

A Mechanische Abmessungen / dimensions:

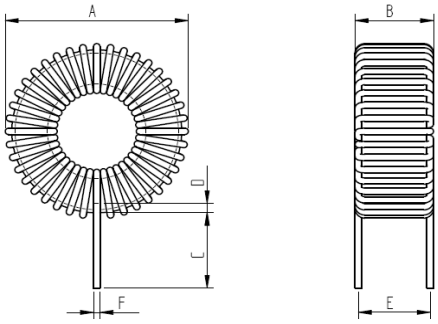

A	**17,0 max**	mm
B	**9,5 max**	mm
C	**12,0 ± 1,0**	mm
D	**1,0 min**	mm
E	**7,5 ± 1,0**	mm
F	**ø 0,5 ref**	mm

B Elektrische Eigenschaften / electrical properties:

Eigenschaften / properties	Testbedingungen / test conditions		Wert / value	Einheit / unit	tol.
Leerlauf-Induktivität / inductance	**10 kHz / 5mA**	L_O	**53,0**	µH	**±20%**
Nenn-Induktivität / nominal inductance	**10 kHz/5mA/IN**	L_N	**47,0**	µH	**min.**
DC-Widerstand / DC-resistance		R_{DC}	**0,0800**	Ω	**max.**
Nennstrom / nominal current		I_N	**1,0**	A	

C Lötpad / soldering spec.:

D Prüfgeräte / test equipment:

Wayne Kerr 3260B für/for L_0

GMC Metrahit 27I Milliohmmeter für/for R_{DC}

Fluke 54II Thermometer für/for I_{DC}

E Testbedingungen / test conditions:

Luftfeuchtigkeit / humidity: 33%

Umgebungstemperatur / temperature: +20°C

F Werkstoffe & Zulassungen / material & approvals:

Basismaterial / base material: Ferrit / ferrite 3 W 7538

Draht / wire: 2 UEW; 130°C

G Eigenschaften / general specifications:

Betriebstemp. / operating temperature -25°C - + 85°C

Freigabe erteilt / general release:

Kunde / customer	Würth Elektronik
Datum / date	Unterschrift / signature
Geprüft / checked	Kontrolliert / approved

Name	Änderung / modification	Datum / date
CZ	Version 4	2009-12-01
CZ	Version 3	2009-07-22
MST	Version 1	2004-10-11

This electronic component has been designed and developed for usage in general electronic equipment. Before incorporating this component into any equipment where higher safety and reliability is especially required or if there is the possibility of direct damage or injury to human body, for example in the range of aerospace, aviation, nuclear control, submarine, transportation, (automotive control, train control, ship control), transportation signal, disaster prevention, medical, public information network etc, Würth Elektronik eiSos GmbH must be informed before the design-in stage. In addition, sufficient reliability evaluation checks for safety must be performed on every electronic component which is used in electrical circuits that require high safety and reliability functions or performance.

Würth Elektronik eiSos GmbH & Co. KG

D-74638 Waldenburg · Max-Eyth-Strasse 1 - 3 · Germany · Telefon (+49) (0) 7942 - 945 - 0 · Telefax (+49) (0) 7942 - 945 - 400
http://www.we-online.com