12/24-Port IEEE 802.3bt PoE PSE Controller

FEATURES

- **Fully Compliant IEEE 802.3bt Type 3 and 4 PSE**
- **Up to 24 PSE Ports with Two Power Channels per Port**
- **+80V/–20V Tolerant Port-Facing Pins**
- **ECC-Protected eFlash and Data RAMs**
- **Low Power Path Dissipation per Channel**
  - **100mΩ Sense Resistance**
  - **30mΩ or Lower MOSFET $R_{DS(ON)}$**
- **Chipset Provides Electrical Isolation**
  - **Eliminates Optos and Isolated 3.3V Supply**
- **Very High Reliability Multipoint PD Detection**
  - **Connection Check Distinguishes Single-Signature and Dual-Signature PDs**
- Continuous Per-Port Voltage and Current Monitoring
- 1MHz I^2C Compatible Serial Control Interface
- Pin or I^2C Programmable PD Power
- Available in a 24-Lead 4mm × 4mm (LTC9101-2) and 64-Lead 7mm × 11mm (LTC9102) QFN Packages

APPLICATIONS

- PoE PSE Switches/Routers and Midspans

All registered trademarks and trademarks are the property of their respective owners.

DESCRIPTION

The LTC®9101-2 chipset is a 12/24-port power sourcing equipment (PSE) controller designed for use in IEEE 802.3bt Type 3 and 4 compliant Power over Ethernet (PoE) systems. The LTC9101-2/LTC9102 is designed to power compliant 802.3af, 802.3at, and 802.3bt PDs. The LTC9101-2/LTC9102 chipset delivers lowest-in-industry heat dissipation by utilizing low $R_{DS(ON)}$ external MOSFETs and 0.1Ω sense resistance per power channel. A transformer-isolated communication protocol replaces expensive opto-couplers and complex isolated 3.3V supply, resulting in significant BOM cost savings.

Advanced power management features include per-port 14-bit current/voltage monitoring, programmable power limits, and versatile fast shut down of preselected ports. An advanced power management host software layer is available. PD detection uses a proprietary multipoint detection mechanism ensuring excellent immunity from false PD identification. Autoclass and 5-event physical classification are supported. The LTC9101-2/LTC9102 includes an I^2C serial interface operable up to 1MHz. The LTC9101-2/LTC9102 is pin or I^2C programmable to negotiate PD delivered power up to 71.3W.

TYPICAL APPLICATION

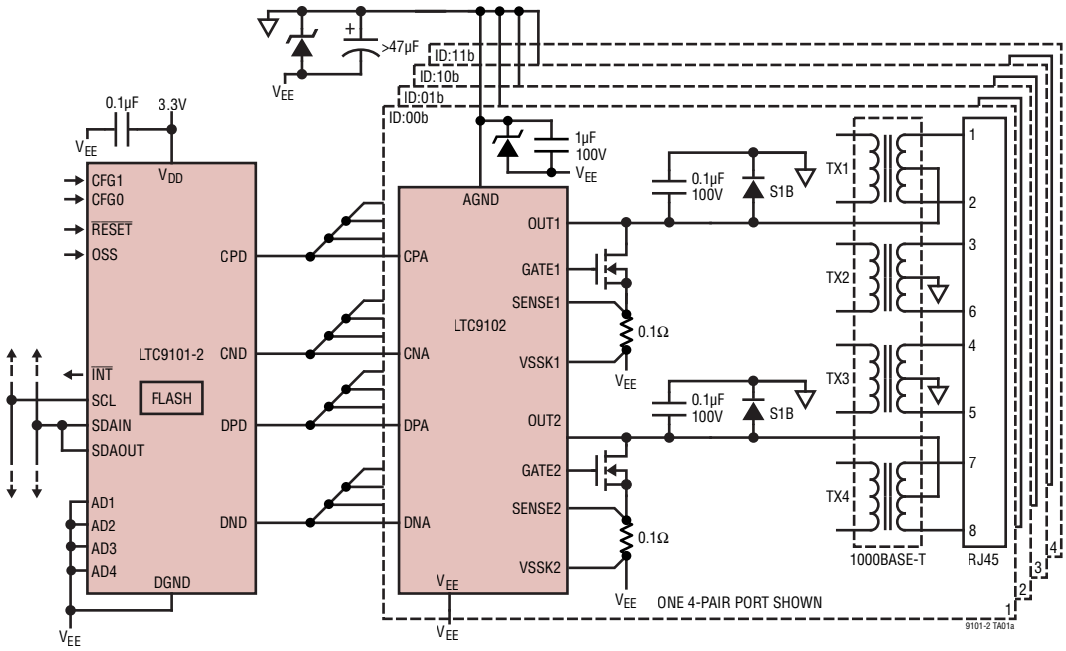

Rev. 0

ABSOLUTE MAXIMUM RATINGS

(Notes 1, 4)

LTC9101-2

Supply Voltages (with respect to DGND)
- V_{DD} ..... –0.3V to 3.6V
- CAP1, CAP2 ..... –0.3V to 1.32V

Digital Pins
- ADn, CFGn, OSS, SDAIN, SDAOUT, SCL, $\overline{RESET}$, $\overline{INT}$ ..... –0.3V to V_{DD} + 0.3V

Analog Pins
- CPD, CND, DPD, DND ..... –0.3V to V_{DD} + 0.3V

Operating Ambient Temperature ..... –40°C to 85°C
Operating Junction Temperature (Note 2).. –40°C to 125°C
Storage Temperature ..... –65°C to 150°C

(Note 1)

LTC9102

Supply Voltages (with respect to V_{EE})
- AGND ..... –0.3V to 80V
- PWRIN ..... –0.3V to 80V
- CAP3, CAP4 ..... –0.3V to 5V
- VSSKn ..... –0.3V to 0.3V

Analog Pins
- SENSEn, OUTn ..... –20V to 80V
- GATEn, IDn, PWRMDn ..... –0.3V to 80V
- CPA, CNA, DPA, DNA .....–0.3V to CAP3 + 0.3V
- EXT3 ..... –0.3V to 30V

Operating Ambient Temperature .....–40°C to 85°C
Operating Junction Temperature (Note 2)...–40°C to 125°C
Storage Temperature ..... –65°C to 150°C

PIN CONFIGURATION

LTC9101-2

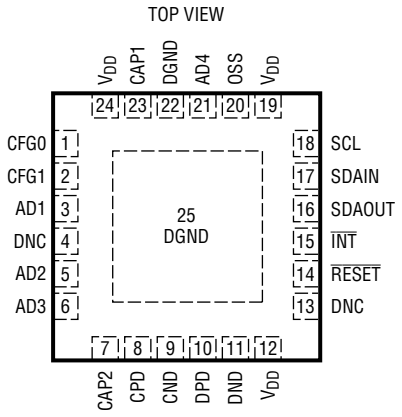

UF PACKAGE
24-LEAD (4mm × 4mm) PLASTIC QFN
θ_{JC} = 4°C/W, θ_{JA} = 47°C/W
EXPOSED PAD (PIN 25) IS DGND, MUST BE SOLDERED TO PCB

LTC9102

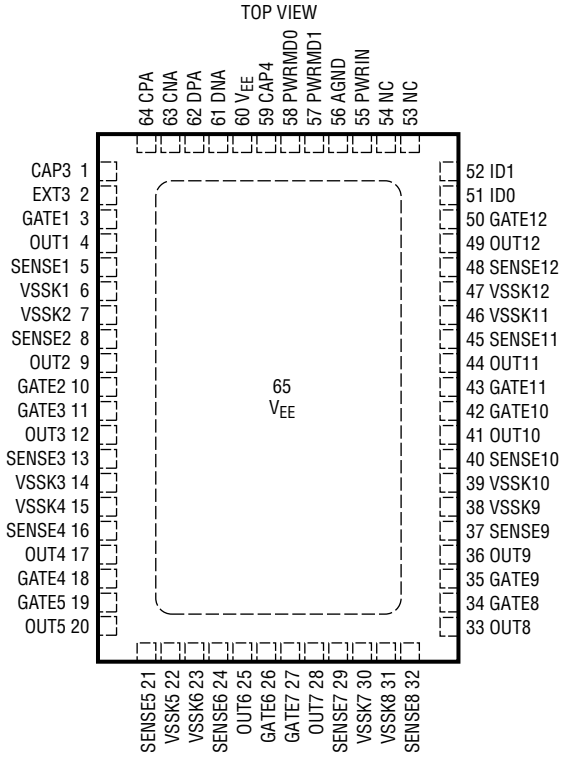

UKJ PACKAGE
64-LEAD (7mm × 11mm) PLASTIC QFN
θ_{JC} = 1°C/W, θ_{JA} = 22°C/W
EXPOSED PAD (PIN 65) IS V_{EE}, MUST BE SOLDERED TO PCB

ORDER INFORMATION

LEAD FREE FINISH	TAPE AND REEL	PART MARKING	PACKAGE DESCRIPTION	TEMPERATURE RANGE
LTC9101AUF-2#PBF	LTC9101AUF-2#TRPBF	91012	24-Lead (4mm × 4mm) Plastic QFN	–40°C to 85°C
LTC9102AUKJ#PBF	LTC9102AUKJ#TRPBF	LTC9102	64-Lead (7mm × 11mm) Plastic QFN	–40°C to 85°C

Contact the factory for parts specified with wider operating temperature ranges.

Tape and reel specifications. Some packages are available in 500 unit reels through designated sales channels with #TRMPBF suffix.

ELECTRICAL CHARACTERISTICS

The ● denotes the specifications which apply over the full operating temperature range, otherwise specifications are at T_A = 25°C. AGND – V_{EE} = 55V and V_{DD} – DGND = 3.3V unless otherwise noted. (Notes 3 and 4)

SYMBOL	PARAMETER	CONDITIONS		MIN	TYP	MAX	UNITS
	Main PoE Supply Voltage	AGND – V_{EE} Type 3 Compliant Output Type 4 Compliant Output	 ● ●	 51 53		 57 57	 V V
	LTC9102 Undervoltage Lockout	AGND – V_{EE}	●		8.2	9	V
V_{DD}	V_{DD} Supply Voltage	V_{DD} – DGND	●	3	3.3	3.6	V
	Undervoltage Warning				2.8		V
	Undervoltage Lockout				2.6		V
	V_{DD} Slew Rate, Falling	2.4 ≤ V_{DD} – DGND ≤ 3.0 (Note 7)				20	mV/µs
V_{CAP1}, V_{CAP2}	Internal Regulator Supply Voltage	V_{CAP1} – DGND, V_{CAP2} – DGND (Note 13)			1.2		V
V_{CAP3}	Internal 3.3V Regulator Supply Voltage	CAP3 – V_{EE} (Note 13)	●	3	3.3	3.6	V
$t_{CAP3EXT}$	CAP3 External Supply Rise Time	0.5V < CAP3 < CAP3(Min), EXT3 Tied to CAP3 (Note 7)	●			1	ms
V_{CAP4}	Internal 4.3V Regulator Supply Voltage	CAP4 – V_{EE} (Note 13)	●		4.3		V
I_{EE}	V_{EE} Supply Current	PWRIN Pin Connected to AGND, EXT3 LOW, All Gates Fully Enhanced		7.7	11	14	mA
	3.3V Rail Supply Current	From CAP3 = 3.3V (EXT3 HIGH)		4.2	5.4	6.6	mA
I_{DD}	V_{DD} Supply Current	(V_{DD} – DGND) = 3.3V	●		40	60	mA
Detection/Connection Check							
	Forced Current	Load Resistance 15.5k to 32k	● ●	220 143	240 160	260 180	µA µA
	Forced Voltage	Load Resistance 18.5k to 27.5k	● ●	7 3	8 4	9 5	V V
	Detection/Connection Check Current Compliance	AGND – OUTn = 0V	●		0.8	0.9	mA
V_{OC}	Detection/Connection Check Voltage Compliance	AGND – OUTn, Open Port	●		10.4	12	V
	Detection/Connection Check Voltage Slew Rate	AGND – OUTn, C_{PORT} = 150nF (Note 7)	●			0.01	V/µs
	Min. Valid Signature Resistance		●	15.5	17	18.5	kΩ
	Max. Valid Signature Resistance		●	27.5	29.7	32	kΩ
Classification							
V_{CLASS}	Classification Voltage	AGND – OUTn, SENSEn – VSSKn < 5mV	●	16		20.5	V
	Classification Current Compliance	SENSEn – VSSKn, OUTn = AGND (Note 15)	●	7	8	9	mV

ELECTRICAL CHARACTERISTICS

The ● denotes the specifications which apply over the full operating temperature range, otherwise specifications are at T_A = 25°C. AGND – V_{EE} = 55V and V_{DD} – DGND = 3.3V unless otherwise noted. (Notes 3 and 4)

SYMBOL	PARAMETER	CONDITIONS		MIN	TYP	MAX	UNITS
	Classification Threshold	SENSEn – VSSKn (Note 15)					
		Class Signature 0 to 1	●	0.5	0.65	0.8	mV
		Class Signature 1 to 2	●	1.3	1.45	1.6	mV
		Class Signature 2 to 3	●	2.1	2.3	2.5	mV
		Class Signature 3 to 4	●	3.1	3.3	3.5	mV
		Class Signature 4 to Overcurrent	●	4.5	4.8	5.1	mV
V_{MARK}	Classification Mark State Voltage	AGND – OUTn, SENSEn – VSSKn < 5mV	●	7.5	9	10	V
	Mark State Current Compliance	OUTn = AGND	●	7	8	9	mV
Gate Driver							
	GATE Pin Pull-Down Current	Port Off, GATEn = V_{EE} + 5V			1		mA
	GATE Pin Fast Pull-Down Current	GATEn = V_{EE} + 5V			65		mA
	GATE Pin On Voltage	GATEn – V_{EE}, I_{GATEn} = 1µA	●	11		14	V
Output Voltage Sense							
V_{PG}	Power Good Threshold Voltage	OUTn – V_{EE}	●	2	2.4	2.8	V
	OUT Pin Pull-Up Resistance to AGND	Port On			2500		kΩ
		Port Off	●	300	500	700	kΩ
Current Sense							
V_{LIM-2P}	Active Current Limit, Single-Signature PD	OUTn – V_{EE} < 10V					
		Class 1 to Class 3	●	40	42.5	45	mV
		Class 4 to Class 6	●	80	85	90	mV
		Class 7	●	100	106	112	mV
		Class 8	●	110	117	124	mV
	Active Current Limit, Dual-Signature PD	OUTn – V_{EE} < 10V					
		Class 1 to Class 3	●	40	42.5	45	mV
		Class 4	●	80	85	90	mV
		Class 5	●	110	117	124	mV
$V_{INRUSH-2P}$	Active Current Limit, Inrush	OUTn – V_{EE} < 30V (Note 16)	●				
		Single-Signature, Class 1 to 4, 4-Pair Power	●	20	21.3	22.5	mV
		All Others		40	42.5	45	mV
$V_{HOLD-2P}$	DC Disconnect Sense Voltage	SENSEn – VSSKn					
		Single-Signature Class 1 to 4, 4-Pair Power	●	200	350	500	µV
		Single-Signature Class 1 to 4, 2-Pair Power	●	500	700	900	µV
		Single-Signature Class 5 to 8, 4-Pair Power	●	200	350	700	µV
		Dual Signature, 2-Pair or 4-Pair Power	●	200	350	700	µV
V_{SC}	Short-Circuit Sense	SENSEn – VSSKn – V_{LIM-2P}			60		mV
Port Current Readback (See Typical Performance Characteristics**, Note 17)**							
	Full-Scale Range	(Notes 7, 15)			204.6		mV
	LSB Weight	|SENSEn – VSSKn|, VSSKn = V_{EE} (Note 15)			24.98		µV/LSB
	Conversion Period				1.967		ms
V_{EE} Readback (See Typical Performance Characteristics**, Note 17)**							
	Full-Scale Range	(Note 7)			82		V
	LSB Weight	|AGND – V_{EE}|			10.01		mV/LSB
	Conversion Period				1.967		ms

ELECTRICAL CHARACTERISTICS

The ● denotes the specifications which apply over the full operating temperature range, otherwise specifications are at T_A = 25°C. AGND – V_{EE} = 55V and V_{DD} – DGND = 3.3V unless otherwise noted. (Notes 3 and 4)

SYMBOL	PARAMETER	CONDITIONS		MIN	TYP	MAX	UNITS
Digital Interface							
V_{ILD}	Digital Input Low Voltage	ADn, $\overline{RESET}$, OSS, CFGn (Note 6)	●			0.8	V
	I^2C Input Low Voltage	SCL, SDAIN (Note 6)	●			1	V
V_{IHD}	Digital Input High Voltage	(Note 6)	●	2.2			V
	Digital Output Low Voltage	I_{SDAOUT} = 3mA, $I_{\overline{INT}}$ = 3mA I_{SDAOUT} = 5mA, $I_{\overline{INT}}$ = 5mA	● ●			0.4 0.7	V V
	Internal Pull-Up to V_{DD}	AD*n*, $\overline{RESET}$, OSS			50		kΩ
	Internal Pull-Down to DGND	CFG0			50		kΩ
	EXT3 Pull-Down to V_{EE}				50		kΩ
	IDn Internal Pull-Up to CAP4	IDn = 0V			5		µA
PSE Timing Characteristics (Note 7)							
t_{DET}	Detection Time	Beginning to End of Detection	●		380	500	ms
t_{CLASS_RESET}	Classification Reset Duration		●	15			ms
t_{CEV}	Class Event Duration		●	6	15	20	ms
t_{CEVON}	Class Event Turn On Duration	C_{PORT} = 0.6µF	●			0.1	ms
t_{LCE}	Long Class Event Duration		●	88		105	ms
t_{CLASS}	Class Event I_{CLASS} Measurement Timing		●	6			ms
t_{CLASS_LCE}	Long Class Event I_{CLASS} Measurement Timing		●	6		75	ms
t_{CLASS_ACS}	Autoclass I_{CLASS} Measurement Timing		●	88		105	ms
t_{ME1}	Mark Event Duration (Except Last Mark Event)	(Note 11)	●	6	9.6	12	ms
t_{ME2}	Last Mark Event Duration	(Note 11)	●	6	20		ms
t_{PON}	Power On Delay, Auto Mode	From End of Valid Detect to End of Valid Inrush (Note 14)	●			400	ms
t_{AUTO_PSE1}	Autoclass Power Measurement Start	From End of Inrush to Beginning of Autoclass Power Measurement	●	1.4		1.6	s
t_{AUTO_PSE2}	Autoclass Power Measurement End	From End of Inrush to End of Autoclass Power Measurement	●	3.1		3.5	s
t_{AUTO_WINDOW}	Autoclass Average Power Sliding Window		●	0.15	0.23	0.3	s
t_{ED}	Fault Delay	From Power On Fault to Next Detect	●	1.0	1.3	1.8	s
t_{START}	Maximum Current Limit Duration During Inrush		●	50	60	75	ms
t_{LIM}	Maximum Current Limit Duration After Inrush	(Note 12) Type 1, t_{LIMn} = 0x0 Spare, t_{LIMn} = 0x1 (Type 3/4 Chip Set) Type 2 and 3, t_{LIMn} = 0x2 Type 4, t_{LIMn} = 0x3		 50 15 10 6	 15 11	 22 17	 ms ms ms ms
t_{MPS}	Maintain Power Signature (MPS) Pulse Width Sensitivity	Current Pulse Width to Reset Disconnect Timer (Note 8)	●			6	ms
t_{DIS}	Maintain Power Signature (MPS) Dropout Time	(Note 5)	●	320	370	400	ms
t_{BIT}	Bit Duration		●	24	25	26	µs
$t_{OSS\text{-}OFF}$	Shutdown Priority Delay		●		6.5	10	µs
t_{r_OSS}	OSS Rise Time		●	1		300	ns
t_{f_OSS}	OSS Fall Time		●	1		300	ns
t_{OSS_IDL}	OSS Idle Time				50		µs

ELECTRICAL CHARACTERISTICS

The ● denotes the specifications which apply over the full operating temperature range, otherwise specifications are at T_A = 25°C. AGND – V_{EE} = 55V and V_{DD} – DGND = 3.3V unless otherwise noted. (Notes 3 and 4)

SYMBOL	PARAMETER	CONDITIONS		MIN	TYP	MAX	UNITS
	I^2C Watchdog Timer Duration		●	1.5	2	3	s
	Minimum Pulse Width for Masked Shutdown		●	3			µs
	Minimum Pulse Width for $\overline{RESET}$		●	4.5			µs
I^2C Timing (Note 7)							
f_{SCLK}	Clock Frequency		●			1	MHz
t_1	Bus Free Time	Figure 5 (Note 9)	●	480			ns
t_2	Start Hold Time	Figure 5 (Note 9)	●	240			ns
t_3	SCL Low Time	Figure 5 (Note 9)	●	480			ns
t_4	SCL High Time	Figure 5 (Note 9)	●	240			ns
t_5	SDAIN Data Hold Time	Figure 5 (Note 9)	●	60			ns
	Data Clock to SDAOUT Valid	Figure 5 (Note 9)	●			250	ns
t_6	Data Set-Up Time	Figure 5 (Note 9)	●	80			ns
t_7	Start Set-Up Time	Figure 5 (Note 9)	●	240			ns
t_8	Stop Set-Up Time	Figure 5 (Note 9)	●	240			ns
t_r	SCL, SDAIN Rise Time	Figure 5 (Note 9)	●			120	ns
t_f	SCL, SDAIN Fall Time	Figure 5 (Note 9)	●			60	ns
	Fault Present to $\overline{INT}$ Pin Low	(Notes 9, 10)	●			150	ns
	Stop Condition to $\overline{INT}$ Pin Low	(Notes 9, 10)	●			1.5	µs
	ARA to $\overline{INT}$ Pin High Time	(Note 9)	●			1.5	µs
	SCL Fall to ACK Low	(Note 9)	●			250	ns

Note 1: Stresses beyond those listed under Absolute Maximum Ratings may cause permanent damage to the device. Exposure to any Absolute Maximum Rating condition for extended periods may affect device reliability and lifespan.

Note 2: This chipset includes overtemperature protection that is intended to protect the device during momentary overload conditions. Junction temperature will exceed 140°C when overtemperature protection is active. Continuous operation above the specified maximum operating junction temperature may impair device reliability.

Note 3: All currents into device pins are positive; all currents out of device pins are negative.

Note 4: The LTC9102 operates with a negative supply voltage (with respect to AGND). To avoid confusion, voltages in this data sheet are referred to in terms of absolute magnitude.

Note 5: t_{DIS} is the same as t_{MPDO} defined by IEEE 802.3.

Note 6: The LTC9101-2 digital interface operates with respect to DGND. All logic levels are measured with respect to DGND.

Note 7: Guaranteed by design, not subject to test.

Note 8: The IEEE 802.3 defines MPS as the set of minimum PSE and PD input current requirements to maintain power. An LTC9101-2/LTC9102 port resets its MPS timer when V_{SENSEn} – VSSKn ≥ $V_{HOLD-2P}$ for t_{MPS} and removes port power when V_{SENSEn} – VSSKn ≥ $V_{HOLD-2P}$ for a period longer than t_{DIS}. See Disconnect section.

Note 9: Values Measured at V_{IHD}.

Note 10: If a fault condition occurs during an I^2C transaction, the $\overline{INT}$ pin will not be pulled down until a stop condition is present on the I^2C bus.

Note 11: Load characteristics of the LTC9102 during Mark: 7V < (AGND – V_{OUTn}) < 10V.

Note 12: See the LTC9101-2NDASI Software Programming documentation for information on serial bus usage and device configuration and status registers.

Note 13: Do not source or sink current from CAP1, CAP2, CAP3 and CAP4.

Note 14: For single-signature PDs, t_{PON} is measured from end of valid detect on either power channel. For dual-signature PDs, t_{PON} is measured from the end of valid detect on the same power channel.

Note 15: Port current and port power measurements depend on sense resistor value (0.1Ω typical). See External Component Selection for details.

Note 16: See Inrush Control for details on inrush threshold selection.

Note 17: ADC characteristics and typical performance are described in terms of LTC9102 hardware capability. Measurements from LTC9102 are processed and synthesized by the LTC9101-2. See LTC9101-2NDASI Software Interface for register descriptions and LSB weights, as presented to the user (port current, port voltage, V_{EE} voltage, and system temperature).

TYPICAL PERFORMANCE CHARACTERISTICS (R_{SENSE} = 0.1Ω unless otherwise specified.)

802.3bt Single-Signature Power-On Sequence, 4-Pair

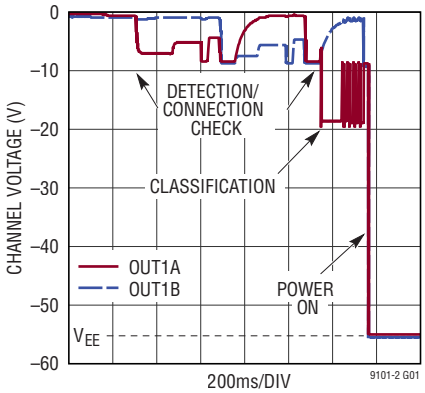

802.3bt Single-Signature Classification and Power-On, 4-Pair

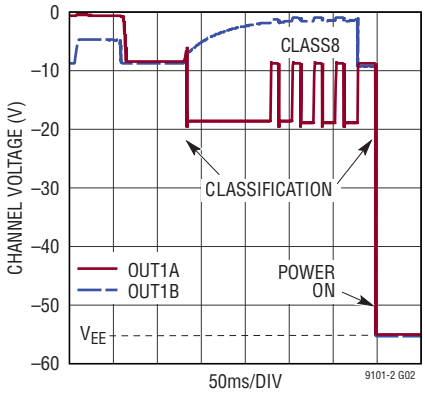

Single-Signature Power-On Sequence, Type 1 Mode

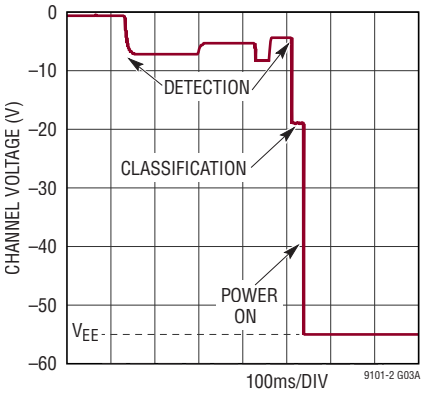

802.3bt Dual-Signature Power-On Sequence

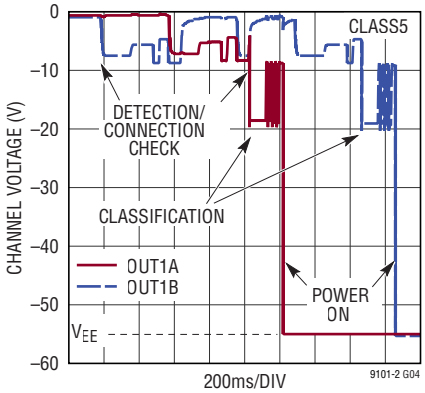

802.3bt Single-Signature Class Probe and Demotion

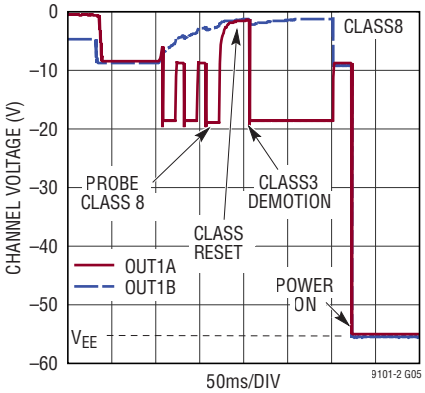

Open Circuit Detection

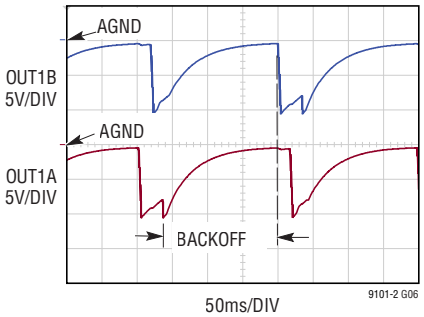

Inrush Current Limit (Note 16)

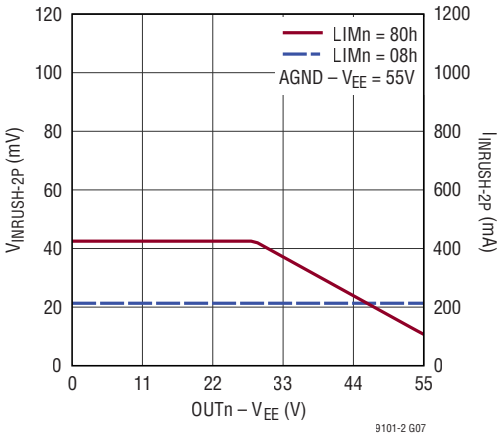

Power-On Current Limits Single-Signature

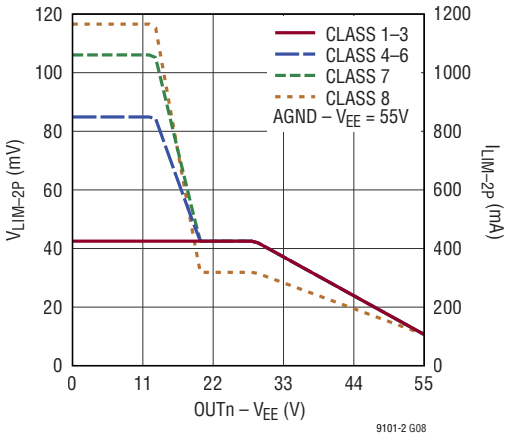

TYPICAL PERFORMANCE CHARACTERISTICS (R_{SENSE} = 0.1Ω unless otherwise specified.)

Power-On Current Limits Dual-Signature

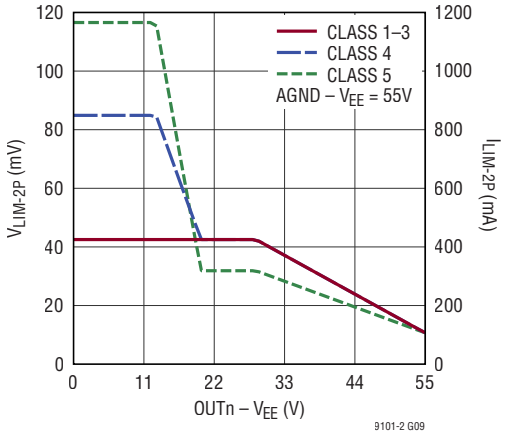

I_{LIM-2P} vs Temperature

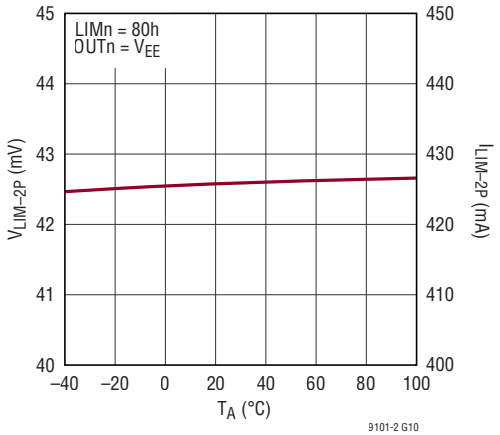

Classification Current Compliance

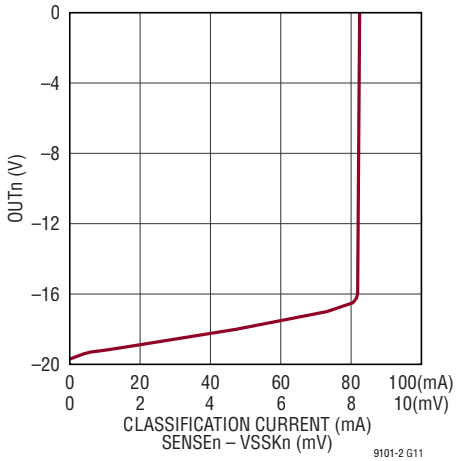

Port Current Readback

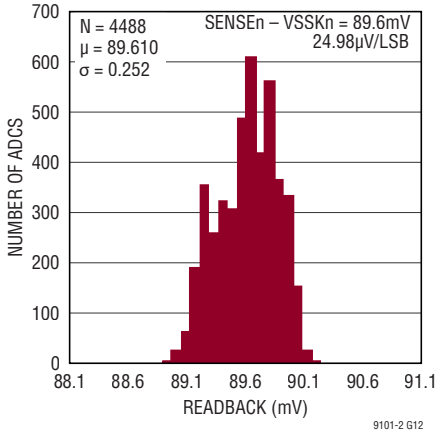

Port Current Readback Offset

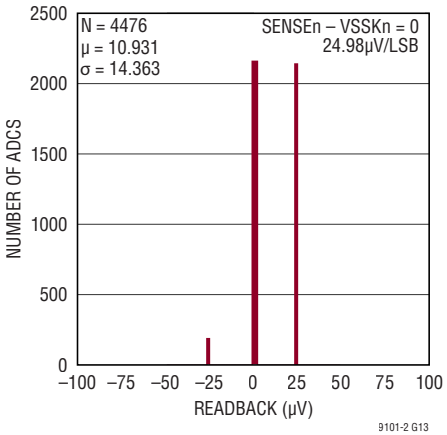

Port Current Readback LSB

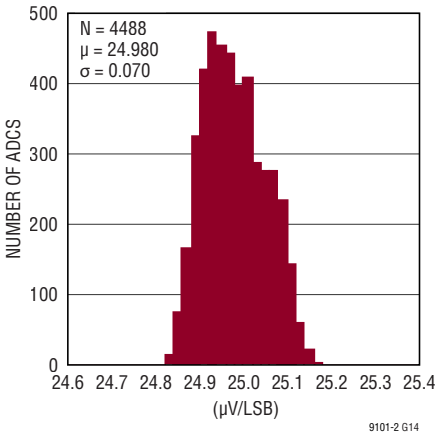

Port Current Readback vs Temperature

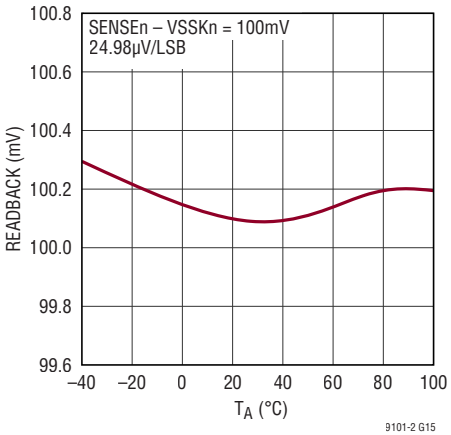

TYPICAL PERFORMANCE CHARACTERISTICS (R_{SENSE} = 0.1Ω unless otherwise specified.)

V_{EE} Readback

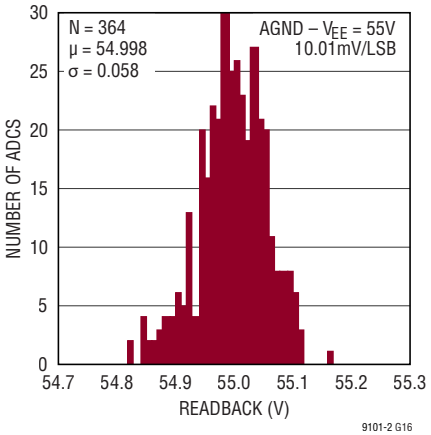

V_{EE} Readback vs Temperature

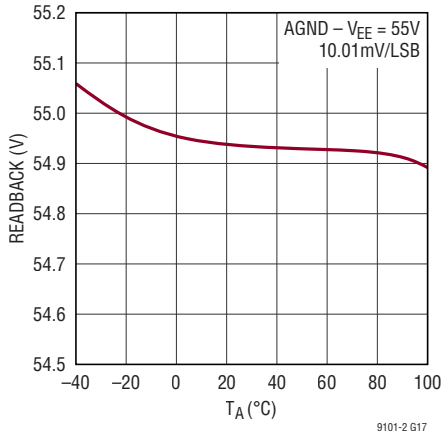

V_{EE} Supply Current vs Voltage and Temperature

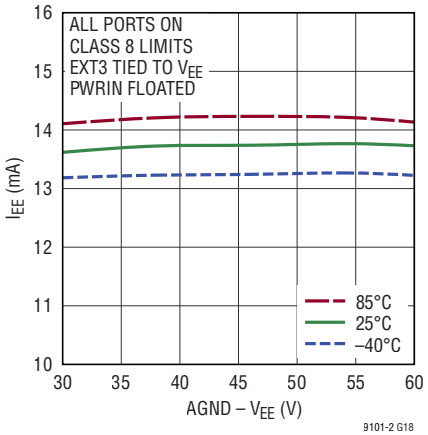

Port Power Readback vs Temperature

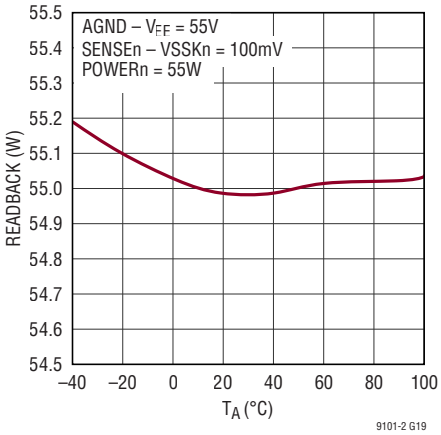

Powering Up into 180μF

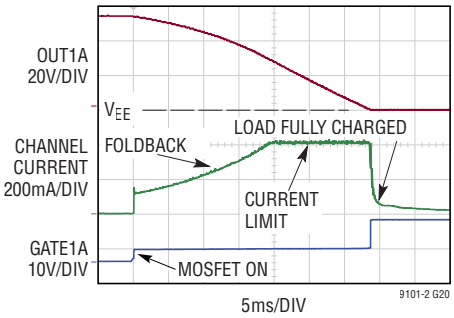

Short-Circuit Recovery

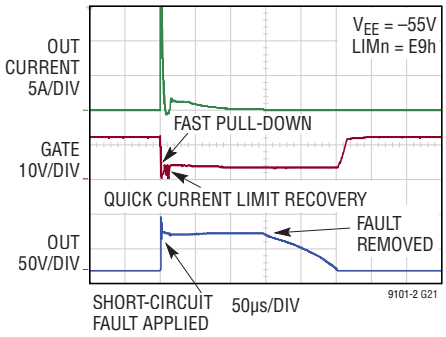

CLOCK and DATA WRITE EYE DIAGRAM

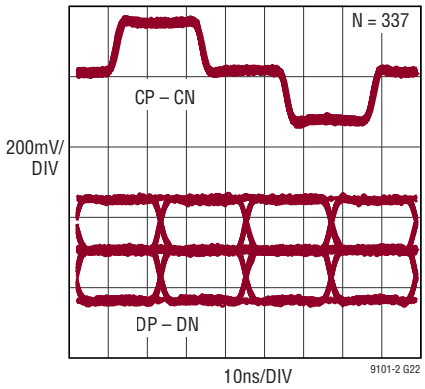

CLOCK and DATA READ EYE DIAGRAM

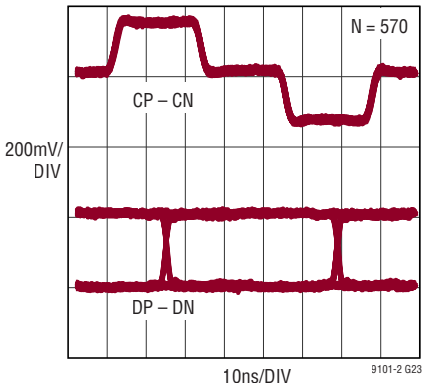

LTC9102 CP/CN and DP/DN Common Mode Correction Current

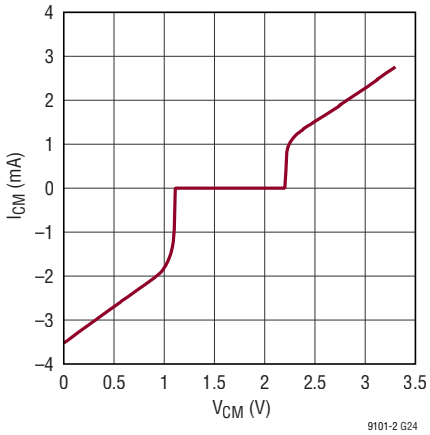

TYPICAL PERFORMANCE CHARACTERISTICS (R_{SENSE} = 0.1Ω unless otherwise specified.)

EXT3 Pin Current vs Voltage

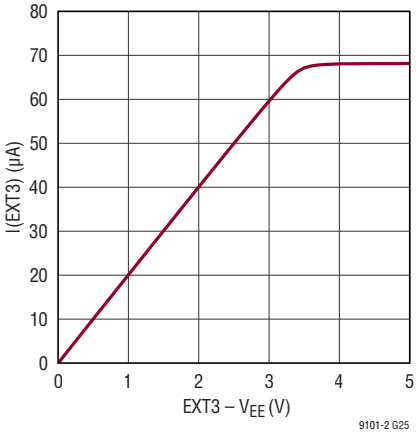

IDn Pin Current vs Voltage

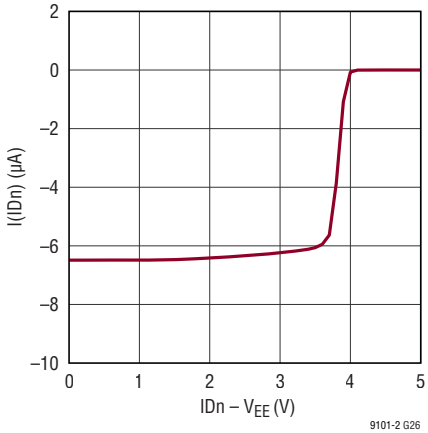

V_{DD} Supply Current vs Voltage and Temperature

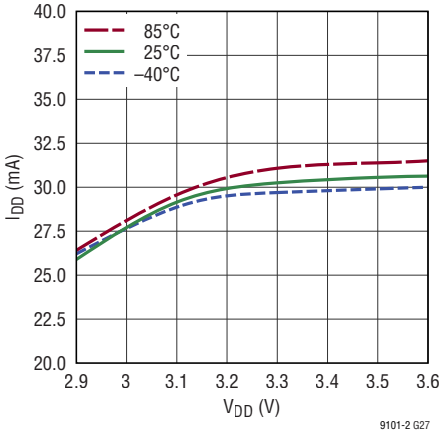

TEST TIMING DIAGRAMS

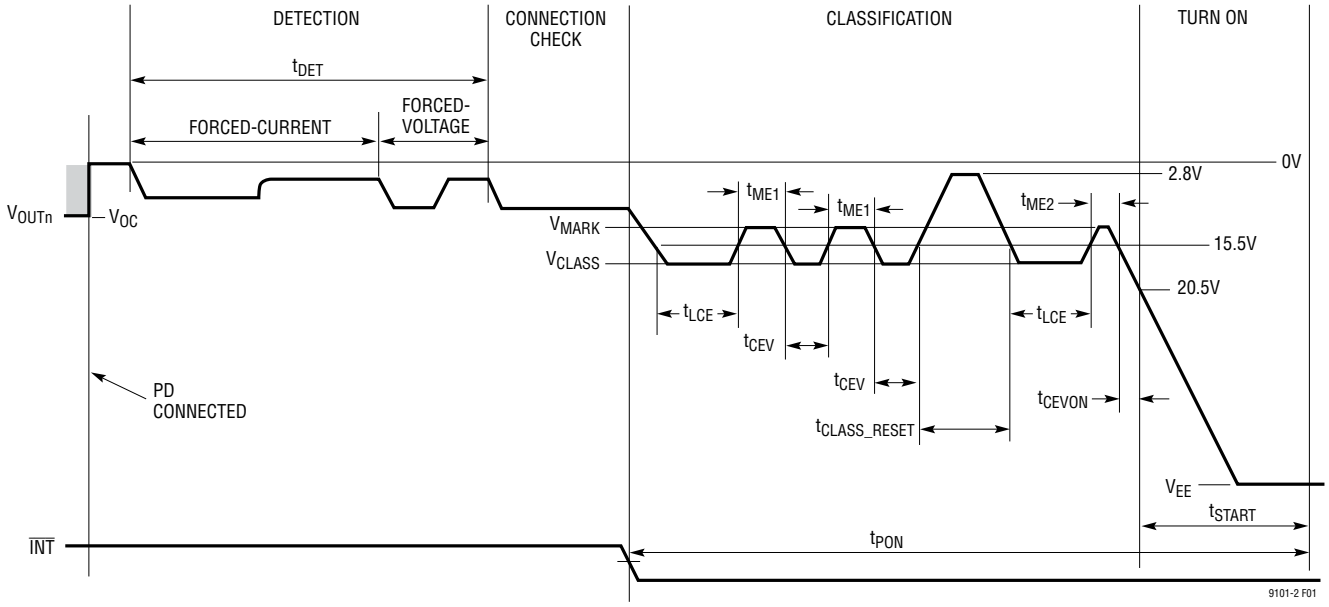

Figure 1. Detect, Class and Turn-On Timing, 4-Pair Port, Primary Alternative, Auto or Semi-Auto Mode

TEST TIMING DIAGRAMS

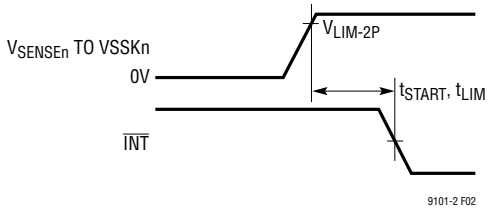

Figure 2. Current Limit Timings

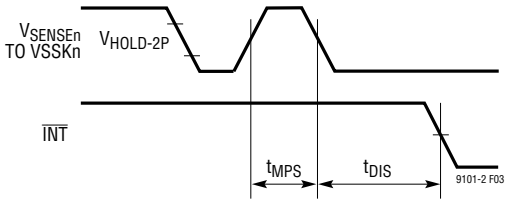

Figure 3. DC Disconnect Timing, Dual-Signature Channel

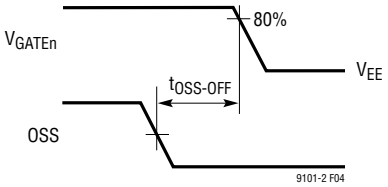

Figure 4. One-Bit Shutdown Priority Timing

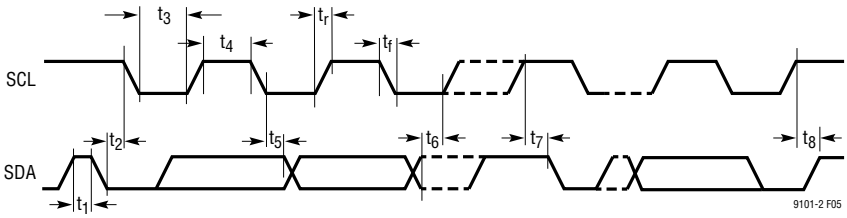

Figure 5. I²C Interface Timing

I²C TIMING DIAGRAMS

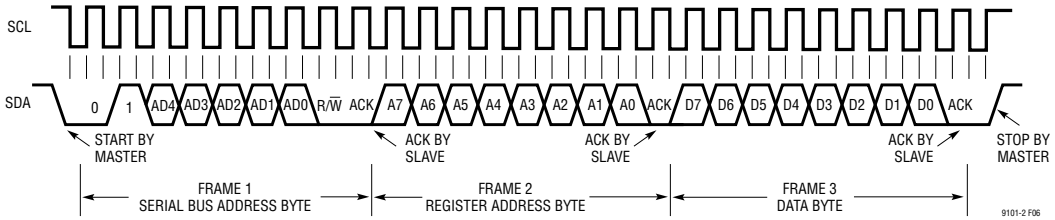

Figure 6. Writing to a Register

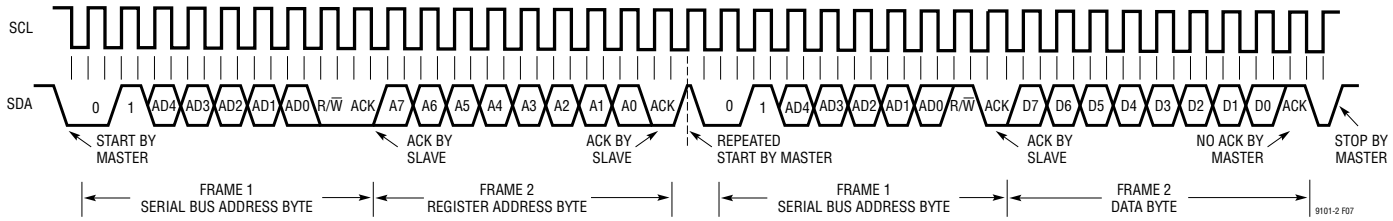

Figure 7. Reading from a Register

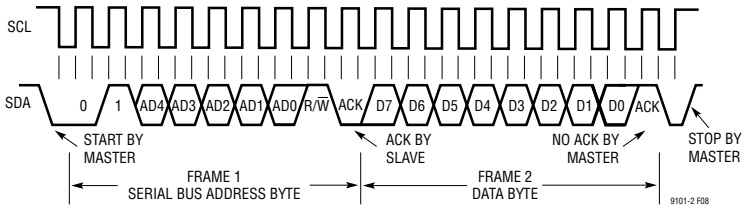

Figure 8. Reading the Interrupt Register (Short Form)

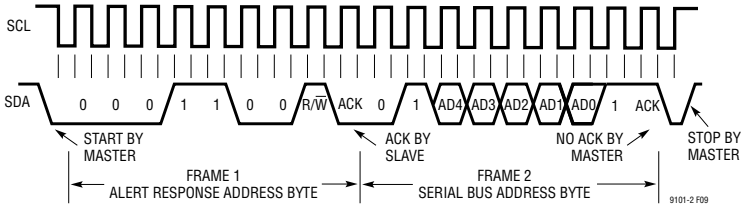

Figure 9. Reading from Alert Response Address

PIN FUNCTIONS

LTC9101-2

CFG[1:0] (Pins 2, 1 Respectively): Device Configuration Inputs. Tie the configuration pins high or low to set number of ports, channels per port, and number of connected LTC9102s. See Device Configuration for details. CFG[0] is ignored when a custom configuration package is present. See Stored Configurations for details.

CAP[2:1] (Pins 7, 23 Respectively): Core Power Supply Bypass Capacitors. Connect each pin to a 1µF capacitance to DGND for the internal 1.2V regulator bypass. Do not use other capacitor values. Do not source or sink current from this pin.

CPD (Pin 8): Clock Transceiver Positive Input Output (Digital). Connect to CPA through a data transformer.

CND (Pin 9): Clock Transceiver Negative Input Output (Digital). Connect to CNA through a data transformer.

DPD (Pin 10): Data Transceiver Positive Input Output (Digital). Connect to DPA through a data transformer.

DND (Pin 11): Data Transceiver Negative Input Output (Digital). Connect to DNA through a data transformer.

V_{DD} (Pins 12, 19, 24): V_{DD} IO Power Supply. Connect to a 3.3V power supply relative to DGND. Each V_{DD} pin must be locally bypassed with at least a 0.1µF capacitor. A 10µF bulk capacitor must be connected across V_{DD} for increased surge immunity.

$\overline{\text{RESET}}$ (Pin 14): Reset Input, Active Low. When $\overline{\text{RESET}}$ is low, the LTC9101-2/LTC9102 is held inactive with all ports off and all internal registers reset. When $\overline{\text{RESET}}$ is pulled high, the LTC9101-2/LTC9102 begins normal operation. $\overline{\text{RESET}}$ can be connected to an external capacitor or RC network to provide a power turn-on delay. Internal filtering of $\overline{\text{RESET}}$ prevents glitches less than 1µs wide from resetting the LTC9101-2/LTC9102. Internally pulled up to VDD.

$\overline{\text{INT}}$ (Pin 15): Interrupt Output, Open Drain. $\overline{\text{INT}}$ will pull low when any one of several events occur in the LTC9101-2. It will return to a high impedance state when bits 6 or 7 are set in the Reset register. The $\overline{\text{INT}}$ signal can be used to generate an interrupt to the host processor, eliminating the need for continuous software polling. Individual $\overline{\text{INT}}$ events can be disabled using the Int Mask register. See LTC9101-2NDASI Software Programming documentation for more information. $\overline{\text{INT}}$ is only updated between I^2C transactions.

SDAOUT (Pin 16): Serial Data Output, Open Drain Data Output for the I^2C Serial Interface Bus. The LTC9101-2 uses two pins to implement the bidirectional SDA function to simplify opto isolation of the I^2C bus. To implement a standard bidirectional SDA pin, tie SDAOUT and SDAIN together. See Applications Information for more information.

SDAIN (Pin 17): Serial Data Input. High impedance data input for the I^2C serial interface bus. The LTC9101-2 uses two pins to implement the bidirectional SDA function to simplify opto isolation of the I^2C bus. To implement a standard bidirectional SDA pin, tie SDAOUT and SDAIN together. See Applications Information for more information.

SCL (Pin 18): Serial Clock Input. High impedance clock input for the I^2C serial interface bus. The SCL pin should be connected directly to the I^2C SCL bus line. SCL must be tied high if the I^2C serial interface bus is not used.

OSS (Pin 20): Maskable Shutdown Input, Active High. Supports both 1-bit shutdown priority and 3-bit shutdown priority. See Over Supply Shutdown (OSS) section for details. Internally pulled down to DGND.

AD[4:1] (Pins 21, 6, 5, 3 Respectively): I^2C Address Bits 4 to 1. Tie the address pins high or low to set the base I^2C serial address. The base address will be ($01A_4A_3A_2A_10b$). Internally pulled up to V_{DD}. See Bus Addressing for details.

DGND (Pins 22, 25): Digital Ground. DGND should be connected to the return from the V_{DD} supply.

LTC9102

CAP3 (Pin 1): Analog Internal 3.3V Power Supply Bypass Capacitor. Connect a 1µF ceramic cap to V_{EE}. A 3.3V power supply may be connected to this pin to improve power supply efficiency. The EXT3 pin must be pulled to CAP3 to shut off the internal 3.3V regulator if power is supplied externally. Do not source or sink current from this pin. Do not connect to CAP3 except as explicitly instructed in ADI documentation (e.g., strapping LTC9102 pins and terminating the serial interface).

EXT3 (Pin 2): External 3.3V Enable. Connect the EXT3 pin to CAP3 to shut off the internal 3.3V regulator when power is supplied externally. Float or connect to V_{EE} for internal regulator operation.

PIN FUNCTIONS

VSSK[12:1] (Pins 47, 46, 39, 38, 31, 30, 23, 22, 15, 14, 7, 6 Respectively): Kelvin Sense to V_{EE}. Connect to V_{EE} side of sense resistor for channel n through a 0.1Ω resistor. Do not connect directly to V_{EE} plane. See Kelvin Sense Requirements.

SENSE[12:1] (Pins 48, 45, 40, 37, 32, 29, 24, 21, 16, 13, 8, 5 Respectively): Current Sense Input, channel n. SENSEn monitors the external MOSFET current via a 0.1Ω sense resistor between SENSEn and VSSKn. If the voltage across the sense resistor reaches the current limit threshold I_{LIM-2P}, the GATEn pin voltage is lowered to maintain constant current in the external MOSFET. See Applications Information for further details. If the channel is unused, tie SENSEn to V_{EE}.

OUT[12:1] (Pins 49, 44, 41, 36, 33, 28, 25, 20, 17, 12, 9, 4 Respectively): Output Voltage Monitor, channel n. Connect OUTn to the output channel. A current limit foldback circuit limits the power dissipation in the external MOSFET by reducing the current limit threshold when the drain-to-source voltage exceeds 10V. A port power good event is raised when the voltage from OUTn to V_{EE} drops below 2.4V (typ). A 500k resistor is connected internally from OUTn to AGND when the channel is idle. If the channel is unused, the OUTn pin must float.

GATE[12:1] (Pins 50, 43, 42, 35, 34, 27, 26, 19, 18, 11, 10, 3 Respectively): Gate Drive, channel n. Connect GATEn to the gate of the external MOSFET for channel n. When the MOSFET is turned on, the gate voltage is driven to 12V (typ) above V_{EE}. During a current limit condition, the voltage at GATEn will be reduced to maintain constant current through the external MOSFET. If the fault timer expires, GATEn is pulled down, turning the MOSFET off and raising a port fault event. If the channel is unused, the GATEn pin must float.

ID[1:0] (Pins 52, 51 respectively): Transceiver ID. Sets the address of the LTC9102 on the multidrop high-speed data interface. ID numbering must start at 00b. Tie high by connecting to CAP3. Tie low by connecting to V_{EE}. See Device Configuration section for details.

PWRIN (Pin 55): Startup Regulator Bypass and External Low Voltage Supply Input. Power for the internal 4.3V and 3.3V internal supplies. An internal regulator maintains the voltage of this pin above 6V. An external resistor or supply may be connected to this node to improve the power efficiency of the LTC9102. Connect a 1µF capacitor between this pin and V_{EE}.

AGND (Pin 56): Analog Ground.

PWRMD[1:0] (Pins 57, 58 Respectively): Maximum Power Mode Input. Connect PWRMD0 of the LTC9102 with ID[1:0] = 00b to V_{EE} with configuration resistor R_{PWRMD}. When the LTC9101-2 is reset, R_{PWRMD} selects initial maximum power allocation values for every port in the chipset; the system power supply must be sized to support all ports outputting up to R_{PWRMD}. When auto mode is enabled, the chipset runs independently as a PoE PSE. The chipset will detect and class all ports and grant power to each port up to R_{PWRMD} setting. The PWRMD0 pin of LTC9102 with ID pins set to 01b, 10b, and 11b must be left floating. The PWRMD1 pin of all LTC9102 must be left floating. See Auto Mode Maximum PSE Power for R_{PWRMD} options and details. The PWRMD pins are ignored when a custom configuration package is present. See Stored Configurations for details.

CAP4 (Pin 59): Analog Internal 4.3V Power Supply Bypass Capacitor. Connect a 1µF ceramic cap to V_{EE}. Do not source or sink current from this pin.

V_{EE} (Pins 60, 65): Main PoE Supply Input. Connect to a –51V to –57V supply, relative to AGND. Voltage depends on PSE Type (Type 3 or 4).

DNA (Pin 61): Data Transceiver Negative Input Output (Analog). Connect to DND through a data transformer.

DPA (Pin 62): Data Transceiver Positive Input Output (Analog). Connect to DPD through a data transformer.

CNA (Pin 63): Clock Transceiver Negative Input Output (Analog). Connect to CND through a data transformer.

CPA (Pin 64): Clock Transceiver Positive Input Output (Analog). Connect to CPD through a data transformer.

COMMON PINS

NC, DNC (LTC9101-2 Pins 4, 13; LTC9102 Pins 53, 54): All pins identified with “NC” or “DNC” must be left unconnected.

APPLICATIONS INFORMATION

OVERVIEW

Power over Ethernet, or PoE, is a standard protocol for sending DC power over copper Ethernet data wiring. The IEEE group that administers the 802.3 Ethernet data standards added PoE powering capability in 2003. This original PoE standard, known as 802.3af, allowed for 48V DC power at up to 13W. 802.3af was widely popular, but 13W was not adequate for some applications. In 2009, the IEEE released a new standard, known as 802.3at or PoE+, increasing the voltage and current requirements to provide 25.5W of delivered power. IEEE 802.3af and 802.3at are commonly known as PoE 1. In 2018, the IEEE released the latest PoE standard, known as 802.3bt or PoE 2. 802.3bt maximizes PD delivered power at 71.3W.

The IEEE standard also defines PoE terminology. A device that provides power to the network is known as a PSE, or power sourcing equipment, while a device that draws power from the network is known as a PD, or powered device. PSEs come in two types: endpoints (typically network switches or routers), which provide data and power; and midspans, which provide power but pass through data. Midspans are typically used to add PoE capability to existing non-PoE networks. PDs are typically IP phones, wireless access points, security cameras, and similar devices.

PoE++ Evolution

Even during the development of the IEEE 802.3at (PoE 1) 25.5W standard, it became clear there was a significant and increasing need for more than 25.5W of delivered power. In 2013, the 802.3bt task force was formed to develop a standard capable of increasing delivered PD power.

The primary objective of the task force is to use all four pairs of the Ethernet cable as opposed to the two pair power utilized by 802.3at. Using all four pairs allows for at least twice the delivered power over existing Ethernet cables. Further, the amount of current per two pairs (known as a pairset) has been increased while maintaining the Ethernet data signal integrity. 802.3bt increases PD delivered power from 25.5W to 71.3W, enabling IEEE-compliant high power PD applications.

The LTC9101-2/LTC9102 delivers power over one or two power channels. Each pairset is driven by a dedicated power channel. In this data sheet, the term “channel” refers to the PSE circuitry assigned to a corresponding pairset. For the purposes of this document, the terms channel and pairset may be considered interchangeable.

In addition, IEEE 802.3bt enables substantially lower Maintain Power Signature (MPS) currents, resulting in significantly lower standby power consumption. This allows new and emerging government or industry standby regulations to be met using standard PoE components.

LTC9101-2/LTC9102 Product Overview

The LTC9101-2/LTC9102 is a sixth generation PSE controller that implements up to 24 (71.3W) 4-pair PSE ports in either an endpoint or midspan application. Virtually all necessary circuitry is included to implement an IEEE 802.3bt compliant PSE design, requiring a pair of external power MOSFETs and sense resistors per port; these minimize power loss compared to alternative designs with onboard MOSFETs, and increase system reliability.

The LTC9101-2/LTC9102 chipset implements an optional proprietary isolation scheme for inter-chip communication. This architecture substantially reduces BOM cost by replacing expensive opto-isolators and isolated power supplies with a single low-cost transformer. A single LTC9101-2 is capable of controlling a bus of up to 4 LTC9102s over this transformer-isolated interface. Direct connection of the LTC9101-2 and the associated LTC9102s is also possible.

The LTC9101-2/LTC9102 offers a configurable interrupt signal triggered by per-port events, per-channel power on control and fault telemetry, per-port current monitoring, V_{EE} monitoring, and one second rolling current, and voltage averaging.

The LTC9101-2/LTC9102 also offers advanced sixth-generation PSE features including internal eFlash for storage of firmware updates and custom user configuration packages, 802.3bt-compliant mode, I^2C quad virtualization for full backwards-compatibility with quad-based IC drivers, ultralow 100mΩ sense resistors, +80V/–20V tolerant port-facing pins, and improvements to cable surge ride through.

APPLICATIONS INFORMATION

Each LTC9102 power channel is implemented with dedicated detection and classification hardware. This allows all ports and channels to detect, classify and power on simultaneously, drastically reducing power on latency across a switch. Other less advanced PSEs are subject to visible delays as PDs, e.g. LED lights, power on a port-by-port basis.

V_{EE} and port current measurements are performed simultaneously, enabling coherent and precise per-port power monitoring.

802.3bt 4-PAIR OPERATION

The LTC9101-2 includes up to 12 groups of four identical channels. Each group of four channels is referred to as a quad. In the LTC9101-2 architecture, each quad contains register configuration and status for exactly four channels and provides control for two 802.3bt ports, composed of two channels each.

To support 802.3bt 4-pair operation, two LTC9102 channels (1,2 and 3,4) are associated with each port. As such it is required that power channels are connected to Alternative A and Alternative B, respectively (see Figure 10). In 4-pair mode the host is responsible for deciding if both power channels will be utilized to power a given PD. Thus 2-pair powering in 4-pair mode can be used to power single-signature Class 0 to 4 PDs. For higher power Class 5 to 8 PDs and for all dual-signature PDs, both power channels must be utilized, also referred to as 4-pair power (see Figure 11).

In 4-pair mode the IEEE 802.3bt standard supports delivered power to 71.3W, supporting all existing single-signature PD Classes 0 to 8 and dual-signature PD Classes 1 to 5.

802.3at Type 1 Mode

All 802.3bt-compliant PSEs are fully backwards compatible with existing 802.3at Type 1 and Type 2 PDs as shown in Table 1.

In addition to full compatibility, 802.3bt PSEs extend support for lower standby power, enhanced current limit timing, and dynamic power management to all PD Types (as supported by the PD application).

Table 1. PSE Maximum Delivered Power, Per-Port

DEVICE			PSE			
	STANDARD		802.3at		802.3bt	
		TYPE	1	2	3	4
PD	802.3at	1	13W	13W	13W	13W
		2	13W*	25.5W	25.5W	25.5W
	802.3bt	3	13W*	25.5W*	51W	51W
		4	13W*	25.5W*	51W*	71.3W

*Indicates PD allocated less power than requested.

The LTC9101-2 further supports 802.3af compliant port operation. In the rare event an 802.3af PD is incompatible with 802.3bt operation, a 15W, No CC mode is supported in the `cfg2p4p` register.

Note that an 802.3at PSE will not pass an 802.3bt PSE compliance test, and an 802.3bt PSE will not pass an 802.3at PSE compliance test. This is by design of the respective standards. 802.3at and 802.3bt devices are designed to be interoperable. Key features of 802.3at and 802.3bt standards are contrasted in Table 2.

Table 2. 802.3at Type 1 vs 802.3bt Features

FEATURE	802.3at TYPE 1	802.3bt
First Class Event	Short	Long
First Mark Event (15W Mode)	No	Yes
Limit Timer	No (Uses Cutoff Timer)	Yes
Connection Check	No	Yes
Active Alternative(s)	A	2-Pair: A 4-Pair: A and B
Maximum Class Events	1	5
Maximum Available Power	Class 3	2-Pair: Class 4 4-Pair: Class 8
Short MPS	No	Yes
Autoclass	No	Yes

PoE BASICS

Common Ethernet data connections consist of two or four twisted pairs of copper wire (commonly known as Ethernet cable), transformer-coupled at each end to avoid ground loops. PoE systems take advantage of this coupling arrangement by applying voltage between the center-taps of the data transformers to transmit power from the PSE to the PD without affecting data transmission. Figure 10 and Figure 11 show high level PoE system schematics.

APPLICATIONS INFORMATION

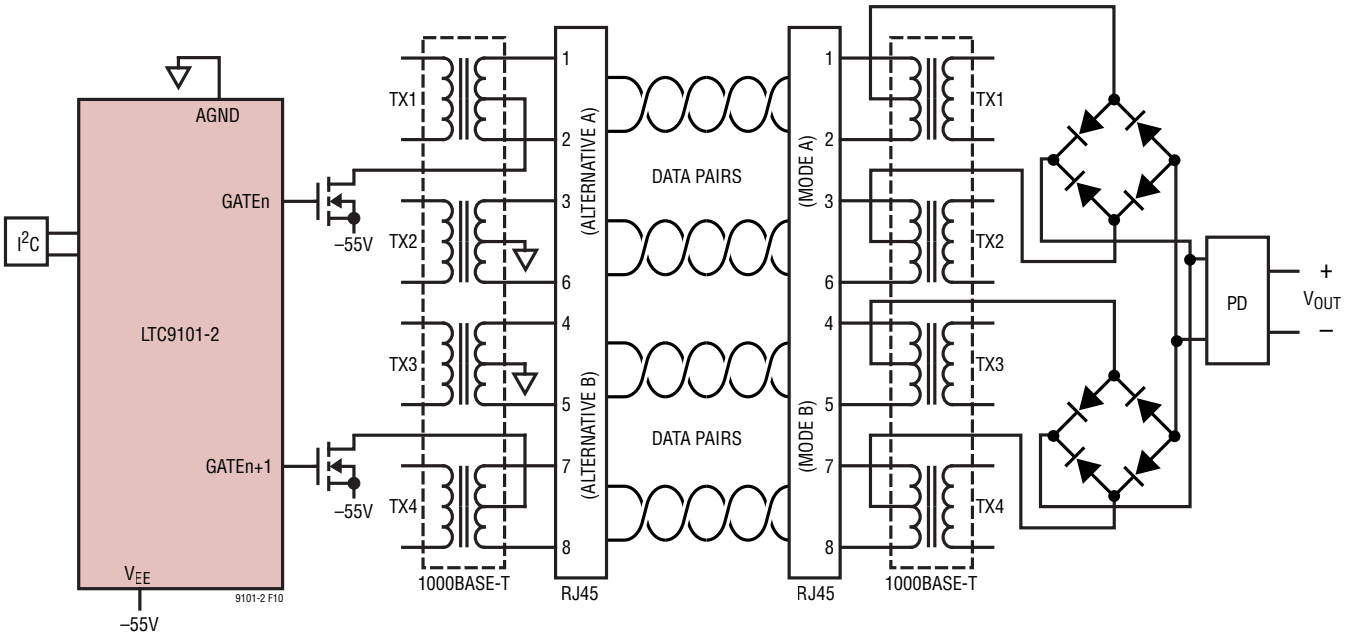

Figure 10. 4-Pair Power over Ethernet Single-Signature PD System Diagram

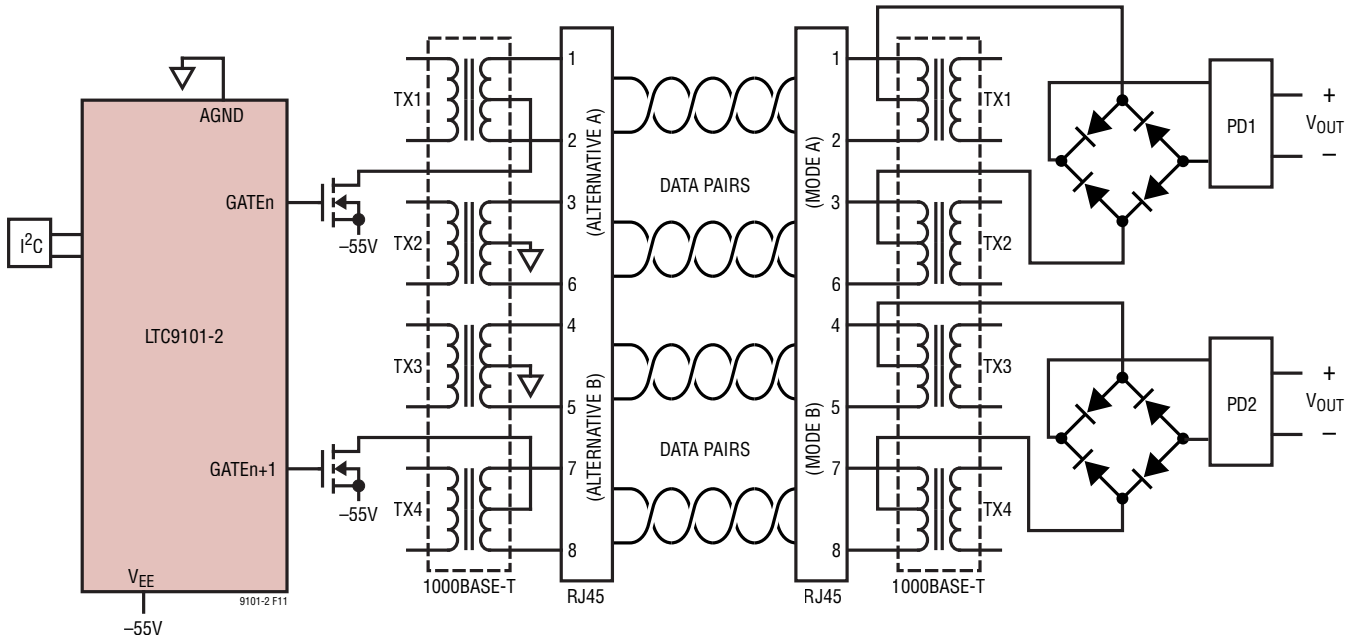

Figure 11. 4-Pair Power over Ethernet Dual-Signature PD System Diagram

APPLICATIONS INFORMATION

To avoid damaging legacy data equipment that does not expect to see DC voltage, the PoE standard defines a protocol that determines when the PSE may apply and remove power. Valid PDs are required to have a specific 25k common-mode resistance at their input. When such a PD is connected to the cable, the PSE detects this signature resistance and applies power. When the PD is later disconnected, the PSE senses the open circuit and removes power. The PSE also removes power in the event of a current fault or short circuit.

When a PD is detected, the PSE looks for a classification signature that tells the PSE the maximum power the PD will draw. The PSE can use this information to allocate power among several ports, to police the power consumption of the PD, or to reject a PD that will draw more power than the PSE has available.

New in 802.3bt

The 802.3bt specification introduces several new features:

- Type 3 and Type 4 PSEs may provide power over all four pairs (both pairsets), depending on connected PD characteristics.
- Type 3 and Type 4 PDs are required to be capable of receiving power over all four pairs (both pairsets).
- Type 3 and 4 PDs can be formed as either a single-signature PD or dual-signature PD. A single-signature PD presents the same valid signature resistor to both pairsets simultaneously (see Figure 10). A dual-signature PD presents two fully independent valid detection signatures, one to each pairset (see Figure 11).
- Type 3 single-signature PDs request exactly one of six possible power levels: 3.84W, 6.49W, 13W, 25.5W, 40W, or 51W.
- Type 3 dual-signature PDs request exactly one of four possible power levels on each pairset: 3.84W, 6.49W, 13W, or 25.5W. The total PD requested power is the sum of the requested power on both pairsets.
- Type 3 PD Classes overlap with Type 1 and 2 Classes in order to provide additional Type 3 feature sets at lower power levels.
- Type 4 single-signature PDs request exactly one of two possible power levels: 62W or 71.3W.
- Type 4 dual-signature PDs request exactly 35.6W on at least one pairset and one of five possible power levels on the other pairset: 3.84W, 6.49W, 13W, 25.5W, or 35.6W. The total PD requested power is the sum of the requested power on both pairsets.
- Classification is extended to a possible maximum of five class events. The additional events allow for unique identification of existing and new PD Classes.
- Type 3 and 4 PSEs issue a long first class event to advertise Type 3 and 4 feature support to attached PDs.
- Lower standby power is enabled by shortening the length of the maintain power signature pulse (short MPS). The PD duty cycle drops from ~23% to ~2%. A PD is allowed to present short MPS if the PSE issues a long first class event.
- Power management is augmented by Autoclass, an optional feature for 802.3bt PSEs and PDs. In an Autoclass system the maximum PD power is measured and reported to the PSE host, enabling the PSE to reclaim output power not used by the PD application and losses in the Ethernet cabling (Table 3). See Autoclass section and LTC9101-2NDASI Software Programming documentation for details.

Table 3. IEEE-Specified Power Allocations, Single-Signature PD

PD CLASS	PSE OUTPUT POWER	ALLOCATED CABLING LOSS	PD INPUT POWER
1	4W	0.16W	3.84W
2	6.7W	0.21W	6.49W
3	14W	1W	13W
4	30W	4.5W	25.5W
5	45W	5W	40W
6	60W	9W	51W
7	75W	13W	62W
8	90W	18.7W	71.3W

APPLICATIONS INFORMATION

DEVICE CONFIGURATION

An LTC9101-2 can control between one and four LTC9102. Each LTC9102 controls 12 power channels. Thus, each LTC9101-2 can control up to 48 power channels.

As described later in Bus Addressing, each group of four channels occupies a single I^2C address.

Table 4. Device Configuration Options

CFG [1:0]	NUMBER OF PORTS 4P	NUM 9102s	I^2C ADDRs	I^2C ADDRESS OFFSET OCCUPIED											
				0	1	2	3	4	5	6	7	8	9	10	11
0 00	6	1	3												
1 01	12	2	6	✓	✓	✓	✓	✓	✓						
2 10	18	3	9	✓	✓	✓	✓	✓	✓	✓	✓	✓			
3 11	24	4	12	✓	✓	✓	✓	✓	✓	✓	✓	✓	✓	✓	✓

OPERATING MODES

The LTC9101-2/LTC9102 controls up to 48 independent channels, each of which can operate in one of three modes: manual, semi-auto, or auto. A fourth mode, shutdown, disables the port (see Table 5).

As described previously, groups of two channels operate as a 4-pair port. However independent channel controls do exist. For the remainder of this section the port refers to both the port and its underlying channels.

Table 5. Operating Modes

MODE	AUTO MODE	PORT MODE	DETECT/ CLASS	POWER-UP	AUTOMATIC THRESHOLD ASSIGNMENT
Auto	1	11b	Enabled at Reset	Automatically	Yes
	0	11b	Host Enabled	Automatically	Yes
Semi-Auto	0	10b	Host Enabled	Upon Request	Yes
Manual	0	01b	Once Upon Request	Upon Request	Yes
Shutdown	0	00b	Disabled	Disabled	No

In manual mode, the port waits for instructions from the host system before taking any action. It runs a single detection, or detection and classification cycle when commanded to by the host, and reports the result in its Port Status register. The host system can command the port to apply or remove power at any time.

In semi-auto mode, the port repeatedly attempts to detect and classify any PD attached to it. It reports the status of these attempts back to the host, and waits for a command from the host before applying power to the port. The host must enable detection and classification.

Auto mode operates the same as semi-auto mode except it will automatically apply power to the port if detection and classification are successful. Auto mode will autonomously set the 2P Police, 4P Police and 4P I_{LIM} values based on the Class result. This operational mode may be entered by tying the PWRMD0 pin to V_{EE} through a resistor as listed in Table 11, or by changing the operating mode register to Auto mode. See the Auto Mode Maximum PSE Power section.

In shutdown mode the port is disabled and will not detect or power a PD.

Regardless of which mode it is in, the LTC9101-2/LTC9102 will remove power automatically from any port or channel, as appropriate, that generates a fault. It will also automatically remove power from any port/channel that generates a disconnect event if disconnect detection is enabled. The host controller may also command the port to remove power at any time.

Reset and the PWRMD

The initial LTC9101-2/LTC9102 configuration depends on the state of PWRMD0 during reset. Reset occurs at power-up, whenever $\overline{RESET}$ is pulled low, or when the global Reset All bit is set. Changing the state of PWRMD0 after power-up will not change the port behavior of the LTC9101-2/LTC9102 until a reset occurs. The PWRMD1 pin is reserved for future use.

With auto mode enabled via R_{PWRMD}, each port will detect and classify repeatedly until a PD is discovered, set 2P Police, 4P Police, and DC Disconnect according to the PSE assigned Class, apply power to valid PDs, and remove power when a PD is disconnected.

APPLICATIONS INFORMATION

Table 6 and Table 7 show the 2P Police, 4P Police, and DC Disconnect values that will be automatically set in auto mode, based on the PSE assigned Class.

Table 6. Typical Auto Mode Power On Thresholds, Single-Signature PD

PSE ASSIGNED CLASS	2P POLICE (W)	4P POLICE (W)	DC DISCONNECT THRESHOLD
0	15.5	15.5	7.0mA
1	4	4	7.0mA
2	7	7	7.0mA
3	15.5	15.5	7.0mA
4	30	30	7.0mA
5 – 4P	32	45	3.5mA
6 – 4P	39.5	60	3.5mA
7 – 4P	45.5	75	3.5mA
8 – 4P	54	90	3.5mA
CLASS 4+ – TYPE 1 LIMITED	15.5	15.5	7.0mA

*In Auto mode, Class 0-4 SS PDs are powered in 2P/4P based on 2P/4P Config.

Table 7. Typical Auto Mode Power On Thresholds, Dual-Signature PD

PSE ASSIGNED CLASS	2P POLICE (W)	4P POLICE (W)	DC DISCONNECT THRESHOLD
1	4	90	3.5mA
2	7	90	3.5mA
3	15.5	90	3.5mA
4	30	90	3.5mA
5	45	90	3.5mA

CONNECTION CHECK

Connection Check Overview

IEEE 802.3bt introduces a new detection subroutine known as connection check. A connection check is required to determine whether the attached PD is a single-signature PD, a dual-signature PD or an invalid result.

In 802.3at, only one PD configuration was described; this is known as a single-signature PD and is shown in Figure 10. A single-signature PD presents the same 25k detection resistor to both the pairsets in parallel.

New in 802.3bt is the dual-signature PD as shown in Figure 11. A dual-signature PD presents two fully independent 25k detection signature resistors, one to each pairset.

The PD configuration (single or dual) determines how the PD is managed during subsequent detection, classification and power on procedures. Throughout this data sheet attention will be called to the different treatment of single-signature and dual-signature PDs.

Connection check is performed with two current measurements, at the same forced voltage, on the first channel. The second channel is tested for aggressor behavior by introducing a forced current on the second channel during the second measurement. Comparison of the two resulting current measurements on the first channel allows for the connected device to be categorized as a single-signature PD, a dual-signature PD, or an invalid result.

An invalid connection check result is reported when a device is added or removed during connection check.

Connection check only affects operation in 4-pair mode. In 4-pair mode a detection cycle always includes a connection check unless the port is in AT Type 1 mode. See Figure 1.

DETECTION

Detection Overview

To avoid damaging network devices that were not designed to tolerate DC voltage, a PSE must determine whether the connected device is a valid PD before applying power. The IEEE 802.3 specification requires that a valid PD has a common-mode resistance of 25k ±5% at any channel voltage below 10V. The PSE must accept resistances that fall between 19k and 26.5k, and it must reject resistances above 33k or below 15k (shaded regions in Figure 12). The PSE may choose to accept or reject resistances in the undefined areas between the must-accept and must-reject ranges. In particular, the PSE must reject standard computer Network Interface Cards (NICs), many of which have 150Ω common-mode termination resistors that will be damaged if power is applied to them (the black region at the left of Figure 12).

APPLICATIONS INFORMATION

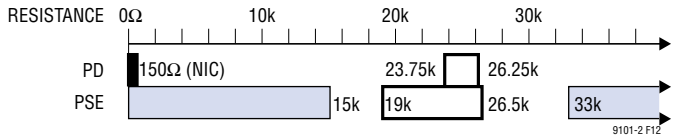

Figure 12. IEEE 802.3 Signature Resistance Ranges

Multipoint Detection

The LTC9101-2/LTC9102 uses a multipoint method to detect PDs. False-positive detections are minimized by checking for signature resistance with both forced current and forced voltage measurements.

Initially, two test currents are forced onto the channel (via the OUTn pin) and the resulting voltages are measured. The detection circuitry subtracts the two V-I points to determine the resistive slope while removing offset caused by series diodes or leakage at the port (see Figure 13). If the forced current detection yields a valid signature resistance, two test voltages are then forced onto the channel and the resulting currents are measured and subtracted. Both methods must report valid resistances to report a valid detection. PD signature resistances between 17k and 29k (typically) are detected as valid and reported as Detect Valid in the corresponding Detection Status register. Values outside this range, including open and short circuits, are also reported. If the channel measures less than 1V during any forced current test, the detection cycle will abort and Short Circuit will be reported. Table 8 shows the possible detection results.

Detection is always performed on a per-channel basis.

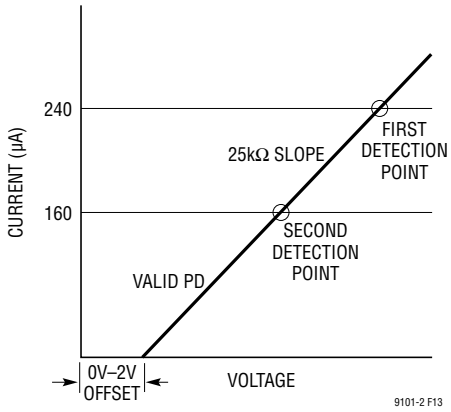

Figure 13. PD Detection

Table 8. Detection Status

MEASURED PD SIGNATURE (TYPICAL)	DETECTION RESULT	CONNECTION CHECK RESULT
Incomplete or Not Yet Tested	Detect Status Unknown	Connection Check Status Unknown
V_{PD} < 1V	Short-Circuit	Invalid/Fault
C_{PD} > 2.7µF or V_{PD} > 10V	C_{PD} Too High	Invalid/Fault
R_{PD} < 17k	R_{SIG} too low	Invalid/Fault
17k < R_{PD} < 29k, Single-Signature PD	Detect Valid	Single-Signature
17k < RPD > 29k, Dual-Signature PD	Detect Valid	Dual-Signature
R_{PD} > 29k	R_{SIG} Too High	Invalid/Fault
R_{PD} > 50k	Open Circuit	Invalid/Fault
PSE Detected	PSE Detected or Port is Precharged	Invalid/Fault
MOSFET Fault	MOSFET Fault Detected	Invalid/Fault

More on Operating Modes

The port's operating mode determines when the LTC9101-2/LTC9102 runs a detection cycle. In manual mode, the port will idle until the host orders a detect cycle. It will then run detection, report the result, and return to idle to wait for another command.

In semi-auto mode the LTC9101-2/LTC9102 autonomously polls a port for PDs, but it will not apply power until commanded to do so by the host. The Detection/Classification Status registers are updated at the end of each detection/classification cycle.

In semi-auto mode, if a valid signature resistance is detected and classification is enabled, the port will classify the PD and report that result as well. The port will then wait for at least 100ms, and will repeat the detection cycle to refresh the data in the Detection/Classification Status registers.

The port will not turn on in response to a power-on command unless the current detect result is Detect Valid. Any other detect result will generate a t_{START} fault if a power-on command is received.

Behavior in Auto mode is similar to semi-auto; however, after Detect Valid is reported and the port is classified, it is automatically powered on without host intervention. In

APPLICATIONS INFORMATION

auto mode, 2P Police, 4P Police, and DC Disconnect are automatically set; see the Reset and the PWRMD section for more information.

Detection is disabled for a port when the LTC9101-2/LTC9102 is initially powered up in Auto mode, when the port is in shutdown mode, or when the corresponding Detect Enable bit is cleared.

Detection of Legacy PDs

Proprietary PDs that predate the original IEEE 802.3af standard are commonly referred to today as legacy PDs. One type of legacy PD uses a large common-mode capacitance (>10µF) as the detection signature.

When large capacitance devices are detected, connection check will be skipped, and detection/classification will only be performed on the channel where a large capacitance device was detected. Legacy PDs may be inferred by detection and classification result, per the Palpatine specification. Legacy PDs are not automatically powered in Auto mode.

CLASSIFICATION

802.3af Classification

A PD may optionally present a classification signature to the PSE to indicate the maximum power it will draw while operating. The IEEE specification defines this signature as a constant current draw when the PSE port voltage is in the V_{CLASS} range (between 15.5V and 20.5V) as shown in Figure 15, with the current level indicating one of five possible PD signatures. Figure 14 shows a typical PD load line, starting with the slope of the 25k signature resistor below 10V, then transitioning to the classification signature current (in this case, Class 3) in the V_{CLASS} range. Table 9 shows the possible classification values.

If classification is enabled, the PSE will classify the PD immediately after a successful detection cycle. The PSE measures the PD classification signature by applying V_{CLASS} to the port via OUTn and measuring the resulting current; it then reports the discovered class in the Port Status or Channel Status register, as appropriate. If the LTC9101-2/LTC9102 is in auto mode, it will additionally use the classification result to set 2P Police, 4P Police, 4P P_{CUT} Enable and DC Disconnect thresholds.

Classification is disabled for a port when the LTC9101-2/LTC9102 is initially powered up with Auto mode disabled, when the port is in shutdown mode, or when the corresponding Class Enable bit is cleared.

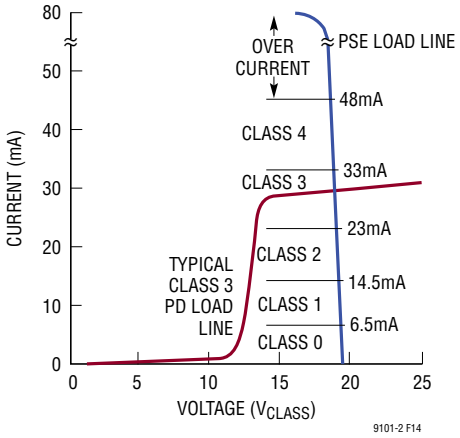

Figure 14. PD Classification

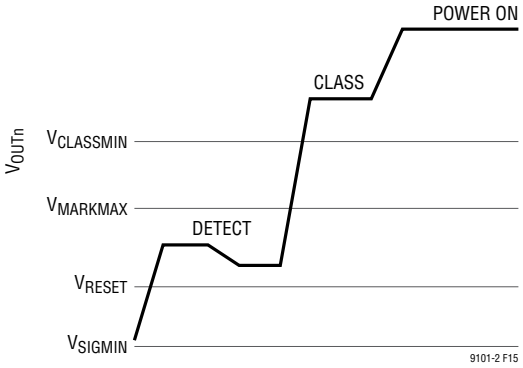

Figure 15. Type 1 or 2 PSE, 1-Event Class Sequence

Table 9. Type 1 and Type 2 PD Classification Values

CLASS	RESULT
Class 0	No Class Signature Present; Treat Like Class 3
Class 1	3.84W
Class 2	6.49W
Class 3	13W
Class 4	25.5W (Type 2)

APPLICATIONS INFORMATION

LLDP Classification

Introduced in 802.3at and extended by 802.3bt, the PoE specification defines a Link Layer Discovery Protocol (LLDP) method of classification. The LLDP method adds extra fields to the Ethernet LLDP data protocol.

Although the LTC9101-2/LTC9102 is compatible with this classification method, it cannot perform LLDP classification directly since it does not have access to the data path. LLDP classification allows the host to perform LLDP communication with the PD and update the PD's power allocation. The LTC9101-2/LTC9102 supports changing the 2P Police and 4P Police levels dynamically, enabling system-level LLDP support.

802.3at 2-Event Classification

In 802.3at, 802.3af classification is named Type 1 classification. The 802.3at standard introduces an extension of Type 1 classification: Type 2 (2-event) classification. Type 2 PSEs are required to perform classification.

A Type 2 PD requesting 25.5W presents class signature 4 during all class events. If a Type 2 PSE with 25.5W of available power measures class signature 4 during the first class event, it forces the PD to V_{MARK} (9V typical), pauses briefly, and issues a second class event as shown in Figure 16. The second class event informs the PD that the PSE has allocated 25.5W.

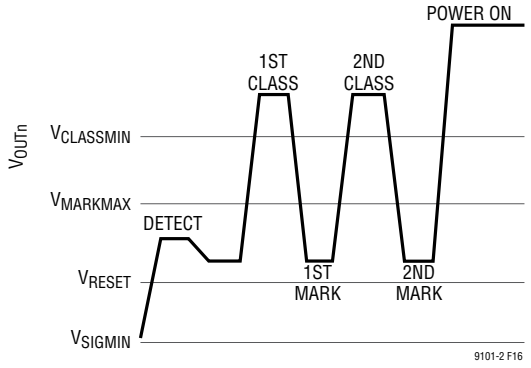

Figure 16. Type 2 PSE, 2-Event Class Sequence

Note that the second classification event only runs if required by the IEEE classification procedure. For example, a single-signature Class 0 to 3 PD will only be issued a single class event as shown in Figure 15.

The concept of demotion is introduced in 802.3at. A Type 2 PD may be connected to a PSE only capable of delivering 13W, perhaps due to power management limitations. In this case, the PSE will perform a single classification event as shown in Figure 15, and note that 25.5W is requested. Due to the limited power availability, the PSE will not issue a second event and proceeds directly to power on the PD. The presence of a single class event informs the Type 2 PD it has been demoted to 13W. If demoted, the PD is subject to power limitations and may operate in a reduced power mode.

802.3bt Multi-Event Classification

The LTC9101-2/LTC9102 implements Type 3 and Type 4 classification as required by 802.3bt. Type 3 and Type 4 classification are backwards-compatible with Type 1 and Type 2 PDs.

While Type 2 (802.3at) classification extends Type 1 (802.3af) classification, Type 3 and Type 4 (802.3bt) classification supersede Type 1 and Type 2 classification. Type 1 and Type 2 classification are described in the preceding sections as a historical reference and to define common terminology such as power demotion, class events, mark events, and electrical parameters.

IEEE 802.3bt defines eight PD Classes for single-signature PDs and five PD Classes for dual-signature PDs, as shown in Table 10.

Classification treatment of single-signature and dual-signature PDs differs. The following sections explain the Physical Layer classification of each PD configuration separately.

APPLICATIONS INFORMATION

Table 10. Type 3 and Type 4 PD Classifications by PD Configuration

SINGLE-SIGNATURE PDs	
CLASS	PD AVAILABLE POWER
Class 1	3.84W
Class 2	6.49W
Class 3	13W
Class 4	25.5W
Class 5	40W
Class 6	51W
Class 7	62W
Class 8	71.3W

DUAL-SIGNATURE PDs	
CLASS	CHANNEL AVAILABLE POWER*
Class 1	3.84W
Class 2	6.49W
Class 3	13W
Class 4	25.5W
Class 5	35.6W

*Dual-signature PD total available power is the sum of both channels available power. Class signatures may differ between channels of a port, e.g., Class 3 + Class 4 = 13W + 25.5W = 38.5W.

802.3bt Classification of Single-Signature PDs

Type 3 and Type 4 PSEs issue a single classification event (see Figure 17) to Class 0 through 3 single-signature (SS) PDs. A Class 0 through 3 SS PD presents its class signature to the PSE and is then powered on if sufficient power is available. Power limited 802.3bt PSEs may also issue a single classification event to Class 4 and higher SS PDs in order to demote those PDs to 13W. See Figure 17.

Type 3 and 4 PSEs present three classification events to Class 4 SS PDs (see Figure 18) if sufficient power is available. Class 4 SS PDs present class signature 4 on all events. The third event differentiates a Class 4 SS PD from a higher Class SS PD. Power limited IEEE 802.3bt PSEs may issue three classification events to Class 5 and higher SS PDs in order to demote those PDs to 25.5W.

Type 3 and 4 PSEs present four classification events (see Figure 19) to Class 5 and 6 SS PDs if sufficient power is available. Class 5 and 6 SS PDs present class signature 4 on the first two events. Class 5 and 6 SS PDs present class signature 0 or 1, respectively, on the subsequent events. Power limited PSEs may issue four events to Class 7 and 8 SS PDs in order to demote those PDs to 51W.

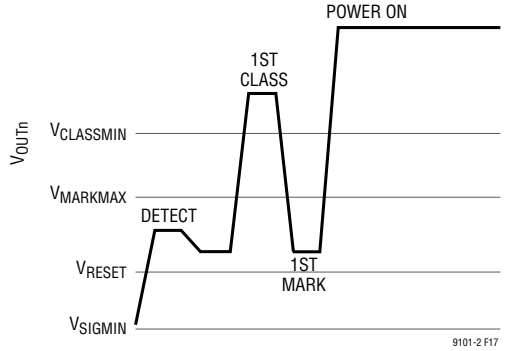

Figure 17. Type 3 or 4 PSE, 1-Event Class Sequence

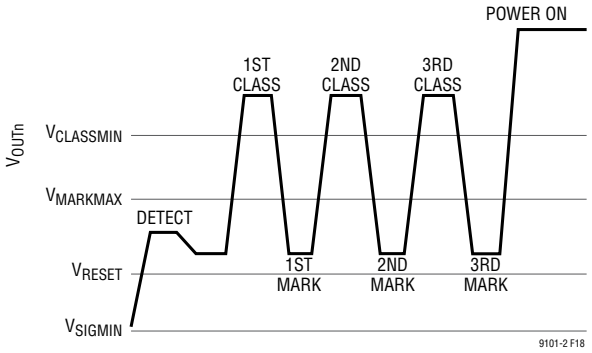

Figure 18. Type 3 or 4 PSE, 3-Event Class Sequence

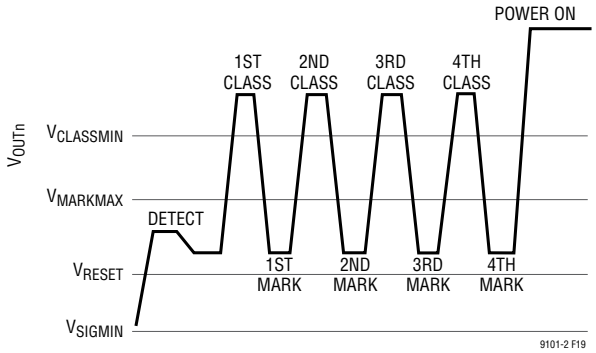

Figure 19. Type 3 or 4 PSE, 4-Event Class Sequence

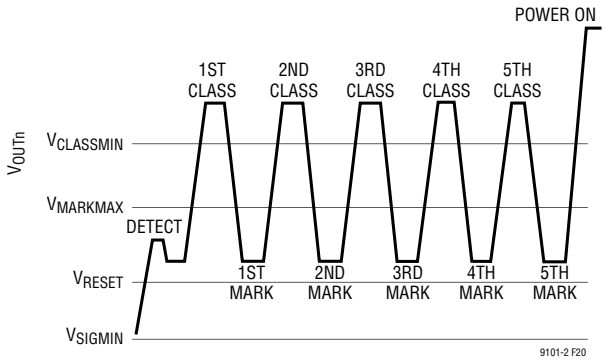

Figure 20. Type 4 PSE, 5-Event Class Sequence

APPLICATIONS INFORMATION

Type 4 PSEs present five classification events (see Figure 20) to Class 7 and 8 SS PDs if sufficient power is available. Class 7 and 8 PDs present class signature 4 on the first two events. Class 7 and 8 SS PDs present class signature 2 or 3, respectively, on the subsequent events.

802.3bt Classification of Dual-Signature PDs

Classification and power allocations to each pairset of a dual-signature (DS) PD are fully independent. For example, a DS PD may request Class 1 (3.84W) on one pairset and a Class 4 (25.5W) on the second pairset for a total PD requested power of 29.3W. As such, all classification is performed to the pairset entity as opposed to the PD. The terms should be considered interchangeable for the remainder of this section.

Type 3 and Type 4 PSEs issue three classification events (see Figure 18) to all Class 1 through 4 DS PDs.

Power limited Type 3 and Type 4 PSEs may issue a class reset to Class 4 and 5 DS PDs in order to demote those PDs to 13W (see Understanding 4PID section).

Power limited Type 3 and Type 4 PSEs may issue only three events to Class 5 DS PDs in order to demote those PDs to 25.5W.

Type 4 PSEs present four classification events (see Figure 19) to Class 5 DS PDs if sufficient power is available. Class 5 DS PDs present class signature 4 on the first two events and class signature 3 on subsequent events.

Understanding 4PID

4-pair identification (4PID) refers to a set of conditions for determining whether a PD is capable of receiving power over both pairsets simultaneously.

The PSE may apply 4-pair power if the PD presents a valid detection signature on both pairsets and one or more of the following conditions are met:

- The PD is single-signature configuration.
- The PD is Type 3 or Type 4.
- The PD presents a valid detection signature on an unpowered pairset when power is applied over the other pairset.

Class Reset

An issue arises when a Class 4 or Class 5 dual-signature PD is connected. In order to determine PD Type, three class events are issued. Based on the class event count, the PD has been allocated 25.5W. If the PSE desires to both determine PD Type (3 events) and demote to 13W (1 event), a class reset event must be issued as shown in Figure 21.

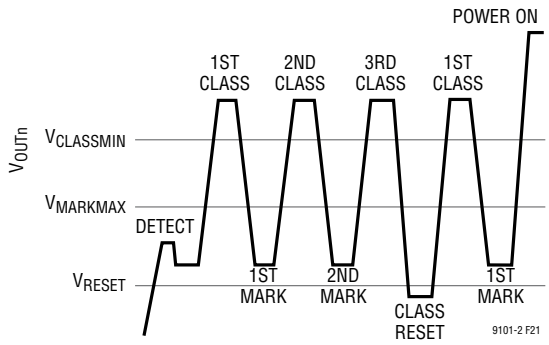

Figure 21. Class Reset Event Between Class Sequences

A class reset event is issued by maintaining the channel voltage below 2.8V for at least t_{CLASS_RESET}. The subsequent single event classification is used to demote the PD to 13W.

In auto mode, the 4PID information is used to automatically determine the number of powered channels.

LLDP signaling may, at some time later, determine the pre-bt PD is actually four pair capable and the LTC9101-2/LTC9102 may be instructed to deliver 4-pair power.

Invalid Multi-Event Classification Combinations

The 802.3bt specification defines a set of valid class signature combinations. All PDs return the same classification signature on the first two class events. Type 3 and 4 PDs modify the classification signature on all subsequent class events. For example, a single-signature Class 5 PD will respond to the class events 1, 2, 3, and 4 with a class signature of 4, 4, 0, and 0, respectively.

Any individual class signature that exceeds the class current limit is flagged as an invalid classification result. Any sequence of class signatures that does not represent a legal sequence based on PD configuration will likewise be flagged as an invalid classification result.

APPLICATIONS INFORMATION

Auto Mode Maximum PSE Power

In auto mode the LTC9101-2/LTC9102 automatically detects, classifies and powers all connected valid PDs. In order to do this, each port must be configured for its maximum power allocation. Select the resistor R_{PWRMD} from Table 11 that reflects the system's per-port maximum power delivery capability.

Connect the PWRMD0 pin of the LTC9102 at ID address 00b to V_{EE} through R_{PWRMD}. The PWRMD0 pin of the LTC9102 at ID address 01b, 10b, and 11b must be left floating. The PWRMD1 pin of each LTC9102 must be left floating. The PWRMD0 resistor is measured at reset.

The maximum power allocation is a reflection of the power supply and power path capability. The PWRMD0 resistor setting is applied to every port in this chipset, across all quads and ICs. Accordingly, the PWRMD0 resistor must be set with consideration for each port's power path capability and for the system's power supply capability.

Table 11. PWRMD0 Pin R_{PWRMD0} Configuration

MODE	R_{PWRMD} (kΩ)	PORT MODE 0x12	DETECT/ CLASS ENABLE 0x14	2P/4P CONFIG 0x29
Disabled	Open	0000,0000b	0000,0000b	1000,1000b
Class 4 to 4P	14.3	1111,1111b	1111,1111b	1011,1011b
Class 5	11.0	1111,1111b	1111,1111b	1100,1100b
Class 6	8.45	1111,1111b	1111,1111b	1101,1101b
Class 7	6.49	1111,1111b	1111,1111b	1110,1110b
Class 8	1	1111,1111b	1111,1111b	1111,1111b

POWER CONTROL

The primary function of the LTC9101-2/LTC9102 is to control power delivery to the PSE port. With the LTC9101-2/LTC9102, a PSE port is composed of either one or two power channels; each power channel controls power delivery over a pairset. Within this section, operation of 4-pair configured ports is defined per channel.

The LTC9101-2/LTC9102 delivers power by controlling the gate drive voltage of an external power MOSFET while monitoring the current (through an external sense resistor) and the output voltage (across the OUT pin).

The LTC9101-2/LTC9102 connects the V_{EE} power supply to the PSE port in a controlled manner, meeting the power demands of the PD while minimizing power dissipation in the external MOSFET and disturbances to the V_{EE} backplane.

Inrush Control

When commanded to apply power to a port, the LTC9101-2/LTC9102 ramps up the GATE pin of one or both channels (as commanded), raising the external MOSFET gate voltage in a controlled manner.

During a typical inrush, the MOSFET gate voltage will rise until the external MOSFET is fully enhanced or the channel reaches the inrush current limit ($I_{INRUSH-2P}$). $I_{INRUSH-2P}$ is set automatically by the PSE. When the PSE is applying 4-pair power to a single-signature PD assigned Class 0 to Class 4, $I_{INRUSH-2P}$ is 212.5mA (typical) per channel. Otherwise, $I_{INRUSH-2P}$ is 425mA (typical) per channel.

The GATE pin will be servoed if channel current exceeds $I_{INRUSH-2P}$, actively limiting current to $I_{INRUSH-2P}$. When the GATE pin is not being servoed, the final V_{GS} is 12V (typical).

During inrush, each powered channel runs a timer (t_{START}). Each powered channel stays in inrush until t_{START} expires. When t_{START} expires, the PSE inspects channel voltage and current. When the PSE is applying power to a PD, inrush is successful if the channel(s) are drawing current below $I_{INRUSH-2P}$, as appropriate per the PD configuration and Class.

If inrush is not successful, power is removed and the corresponding start faults are set. Otherwise, the port or channel, as appropriate, advances to power on and the programmed current limiting thresholds are used as described in the Current Limit section.

Port Power Policing

The power policing threshold (4P Police) is monitored on a per-port basis, up to 128W in 0.5W increments (typical). When the total output power over a one second moving average exceeds the specified threshold, power is removed from the port and the corresponding P_{CUT} faults are set.

APPLICATIONS INFORMATION

In particular, the port policing feature may be used to ensure delivery of PD Class power while staying below 100W Limited Power Source (LPS) requirements.

Channel Power Policing

The channel power policing threshold (2P Police) is monitored on a per-channel basis, up to 128W in 0.5W increments (typical). When the channel output power over a one second moving average exceeds the specified threshold, power will be removed from the channel and the corresponding P_{CUT} fault will be set.

When a channel 2P Police event occurs, if the corresponding port's 4P P_{CUT} Behavior bit is set and a 4P SS PD is powered, both channels will be turned off and both P_{CUT} faults will be set.

Current Limit

Each LTC9101-2/LTC9102 channel includes an implicit current limiting threshold (I_{LIM-2P}), with a corresponding timer (t_{LIM}). The I_{LIM-2P} threshold is a function of the applied 2P Police threshold as shown in Table 12 and Table 13.

Table 12. I_{LIM} Values, Single-Signature PD

2P POLICE	I_{LIM}
0.5W to 15.5W	425mA
16W to 45W	850mA
45.5W to 53.5W	1063mA
54W and Higher	1167mA

Table 13. I_{LIM} Values, Dual-Signature PD

2P POLICE	I_{LIM}
0.5W to 15.5W	425mA
16W to 30W	850mA
30.5W and Higher	1167mA

The LTC9101-2/LTC9102 will actively control the MOSFET gate drive to keep the channel current below I_{LIM-2P}. The LTC9101-2/LTC9102 I_{LIM-2P} threshold is implemented as a two-stage foldback circuit that reduces the channel current if the channel voltage falls below the normal operating voltage. This keeps MOSFET power dissipation at safe levels. The I_{LIM-2P} current limiting circuit is always enabled and actively limiting channel current.

The T_{LIM} register is used to adjust the t_{LIM} setting for each channel and is a minimum time. Two bits are assigned to each channel, as shown in Table 14. These bits are automatically set during startup in Auto mode. t_{LIM} can be adjusted while a channel is active.

Table 14. T_{LIM} Settings

FIELD	T_{LIM}
00b (Default)	Type 1 T_{LIM} 50ms
01b	Spare T_{LIM} 15ms
10b	Type 2 and 3 T_{LIM} 10ms
11b	Type 4 T_{LIM} 6ms

When a channel I_{LIM} event occurs, if the corresponding port's 4P I_{LIM} Behavior bit is set and a Single-Signature PD is 4-Pair powered, both channels will be turned off and both I_{LIM} faults will be set.

MOSFET Fault Detection

LTC9101-2/LTC9102 PSE ports are designed to tolerate significant levels of abuse, but in extreme cases it is possible for an external MOSFET to be damaged. A failed MOSFET may short source to drain, which will make the port appear to be on when it should be off; this condition may also cause the sense resistor to fuse open, turning off the port but causing SENSE to rise to an abnormally high voltage. A failed MOSFET may also short from gate to drain, causing GATE to rise to an abnormally high voltage. OUT, SENSE and GATE are designed to tolerate up to 80V faults without damage.

If the LTC9101-2/LTC9102 detects any of these conditions for more than 3.8ms, it disables all port functionality, reduces the gate drive pull-down current for the port and reports a MOSFET Fault detection status. This is typically a permanent fault, but the host can attempt to recover by resetting the port, setting the port to shutdown mode, or by resetting the entire chip if a port reset fails to clear the fault. If the MOSFET is in fact bad, the fault will quickly return, and the port will disable itself again. The remaining ports of the LTC9101-2/LTC9102 are unaffected.

An open or missing MOSFET will not trigger a MOSFET Fault detection status, but will cause a start fault if the LTC9101-2/LTC9102 attempts to turn on the port.

APPLICATIONS INFORMATION

Disconnect

The LTC9101-2/LTC9102 monitors powered channels to ensure the PD continues to draw the minimum specified current. The $I_{HOLD-2P}$ threshold, monitored as the $V_{HOLD-2P}$ threshold across the 0.1Ω sense resistor, is used to determine if a PD has been disconnected.

The $I_{HOLD-2P}$ (DC Disconnect) threshold is set automatically based on the number of classification events presented to the PD. See Table 6 and Table 7 for details.

A disconnect timer (t_{DIS}) counts up whenever channel current is below the $I_{HOLD-2P}$ threshold, indicating that the PD has been disconnected. If the appropriate t_{DIS} timer(s) expire, the port or channel (Table 15) will be turned off and the corresponding disconnect faults are set. If the current increases above $I_{HOLD-2P}$ before the t_{DIS} timer expires, the timer(s) reset. As long as the PD exceeds the minimum current level before t_{DIS} expires, it will remain powered.

Although not recommended, the DC disconnect feature can be disabled by clearing the corresponding DC Disconnect Enable bits. Disabling the DC disconnect feature forces the LTC9101-2/LTC9102 out of compliance with the IEEE standard. A powered port will stay powered after the PD is removed; the still-powered port may be subsequently connected to a non-PoE data device, potentially causing damage.

The LTC9101-2/LTC9102 does not include AC disconnect circuitry. AC disconnect is not a supported feature of 802.3bt.

Table 15. DC Disconnect Effect on Port/Channel State

PD CONFIGURATION	FAULT RESULT: TURN OFF PORT OR CHANNEL
	t_{DIS}
Single	Port*
Dual	Channel

*If t_{DIS} expires on both channels

Fast Surge Recovery

High reliability systems demand excellent surge recovery. It is increasingly important for a PSE to minimize power disruption to the PDs during extreme power transients. Furthermore, PDs that do not meet minimum bulk capacitance requirements are particularly vulnerable to power brownouts with traditional PSE solutions. The LTC9101-2/LTC9102 provides an improved hot swap responsiveness with excellent recovery from surge events.

During a surge event, the LTC9102 GATE pin quickly turns off the external MOSFET current flow to protect the PSE, the MOSFET, and downstream circuitry. As the surge dissipates, the LTC9102 quickly turns the MOSFET back on in a safe, current limited manner while minimizing power disruption to the PD. The LTC9102 fast MOSFET turn off and power recovery better support both IEEE compliant PDs and PDs with lower bulk capacitance in high reliability applications.

Autoclass

IEEE 802.3bt introduces a new optional feature, Autoclass. Autoclass enables the PSE to reclaim power budget from single-signature PDs requesting more power than needed under worst-case operating conditions. 802.3bt does not specify Autoclass for dual-signature PDs. The LTC9101-2/LTC9102 fully supports Autoclass.

Prior versions of the 802.3 PoE standard specify minimum PSE output power for worst-case IR drop across the Ethernet cable and minimum PSE output voltage. However, a method for the PSE to reclaim over-allocated power is not specified. When a shorter Ethernet cable is used, or when the guaranteed PSE output voltage is above the specified minimum, the specified minimum PSE output power substantially over-allocates power to the PD.

An example PoE system is shown in two versions. Figure 22 shows a 100W four port PSE servicing three 25.5W PDs over 100meter cables. Such a system requires the PSE to allocate 25.5W per PD and a further 4.5W for each 100m cable's IR drop.

The total power allocation is:

3 Ports • (4.5W + 25.5W) = 90W

APPLICATIONS INFORMATION

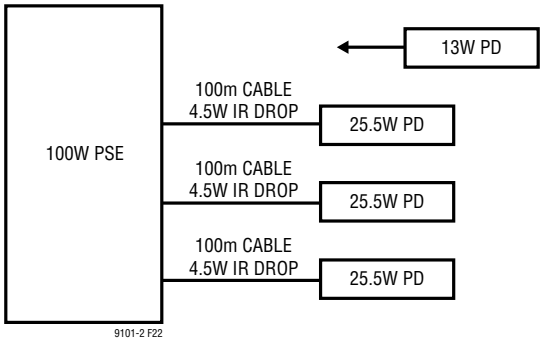

Figure 22. 100W PoE System with 100m Cables

If an additional 13W PD is plugged into the fourth PSE port, only 10W is available and the PD cannot be powered.

Figure 23 shows a 100W four port PSE servicing three 25.5W PDs over 10m cables. Such a system requires the PSE to allocate 25.5W per PD and a further ~0.5W for each 10m cable's IR drop.

Without Autoclass, the total power allocation is:

3 ports • (4.5W + 25.5W) = 90W

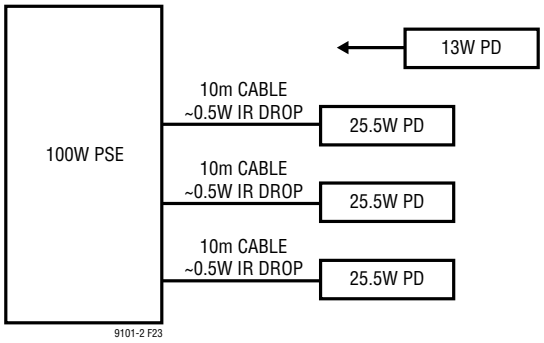

Figure 23. 100W PoE System with 10m Cables

If an additional 13W PD is plugged into the fourth PSE port, only 10W is available and the PD cannot be powered even though the IR drop is much less than in the prior example.

Assuming the system in Figure 23 is Autoclass-enabled, the recovered power budget can be used to power additional ports. During classification, the PSE observes the PD's Autoclass request. After power on is completed, the PD draws its maximum power while the PSE performs an Autoclass measurement, as specified by 802.3bt. The PSE in Figure 23 will measure and report 26W of power consumption for each of the three 25.5W PDs. This result allows the host to revise the PSE available power budget.

With Autoclass, the total power allocation for Figure 23 is:

3 Ports • 26W (Measured) = 78W

If an additional 13W PD is plugged into the fourth PSE port, a full 22W is now available and the PD can be successfully powered.

Autoclass Negotiation Procedure

A PSE may receive an Autoclass request from the PD by Physical Layer classification or LLDP (by way of the PSE host). For Physical Layer requests, the Autoclass negotiation procedure listed below is shown in Figure 24.

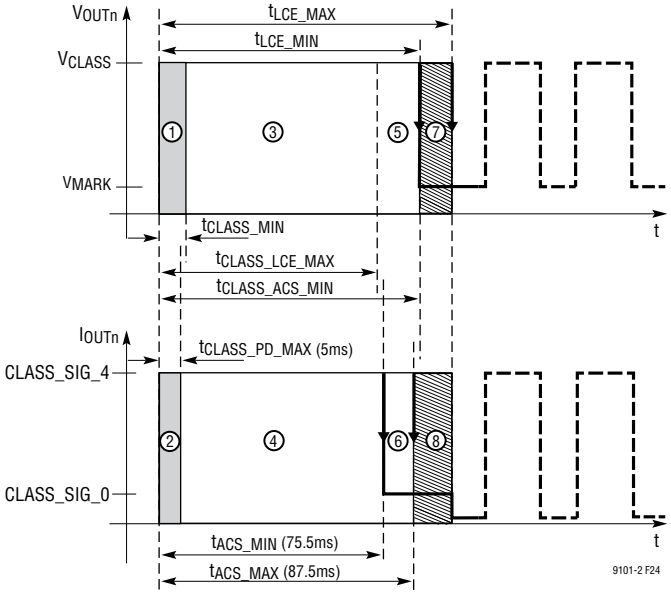

Figure 24. Autoclass Negotiation, Voltage and Current

1. PSE begins issuing the long first class event. The PD class signature is allowed to settle during this time.
2. The PD responds with a class signature corresponding to its Class. The class signature during this time period is unrelated to the Autoclass negotiation.
3. The PSE measures the PD class signature during this time and uses the result for the normal Multi-event Classification.
4. The PD continues presenting its class signature.

APPLICATIONS INFORMATION

5. The PSE continues the long class event and does not measure the class signature current at this time.
6. The PD, if requesting Autoclass, transitions to class signature 0. If the PD is not requesting Autoclass it continues presenting its class signature.
7. The PSE measures the Autoclass response of the PD. If class signature 0 is measured, the PD is requesting Autoclass. When the measurement is complete the first class event is ended.
8. The PD continues holding the class signature selected in step 6 until the end of the first class event.

Following the Autoclass negotiation procedure, PSE and PD continue Physical Layer classification and power up as normal. Regardless of Autoclass, the PD is required to operate below the negotiated power allocation corresponding to PD assigned Class.

Autoclass Measurement Procedure

Autoclass measurements may be requested by the PD through Physical Layer classification or, following power on, through LLDP. Although the LTC9101-2/LTC9102 is compatible with LLDP-based Autoclass requests, it cannot receive LLDP Autoclass requests directly since it does not have access to the data path.

If the PSE is commanded to perform an Autoclass measurement following a Physical Layer request, the measurement typically begins t_{AUTO_PSE1} (1.5s typical) after port inrush is successfully completed. For LLDP-based Autoclass requests, the measurement begins immediately.

The Autoclass measurement period is t_{AUTO_PSE2} – t_{AUTO_PSE1} (1.8s typical) using a sliding window of t_{AUTO_WINDOW} (0.23s typical). During the Autoclass measurement period, the PSE continuously monitors I_{PORT} and V_{EE}, calculating maximum average power. Following the Autoclass measurement period, the Autoclass measurements are reported in the Port Parametric registers.

See the LTC9101-2NDASI Software Programming documentation for details on enabling Autoclass, the status of the Autoclass negotiation, reading Autoclass measurement results and dynamically requesting an Autoclass measurement.

Port Current Readback

The LTC9101-2 measures the current at each power channel with per-channel A/D converters. Channel current is only valid when the power channel is on and reads zero at all other times. Samples are taken continuously; a moving 1 second average is updated every 100ms

Port Voltage and V_{EE} Readback

The LTC9101-2/LTC9102 continuously measures the V_{EE} voltage with a dedicated A/D converter. This global V_{EE} measurement is fully synchronized to all port current measurements and can monitor down to the LTC9102 UVLO threshold.

Temperature Readback

In addition to the over temperature fault in the supply event register, the LTC9101-2 also reports die temperature of each corresponding LTC9102.

Overtemperature Protection

Overtemperature protection automatically removes power from affected ports when LTC9102 temperature exceeds a preset threshold (150°C, typ). Ports are prevented from resuming operation until the die temperature drops below a preset recovery threshold (125°C, typ). SeeLTC9101-2NDASI Software Interface guide for details.

Over Supply Shutdown (OSS)

The LTC9101-2 provides a low latency port shedding feature to quickly reduce the system load when required. By allowing a preconfigured set of ports to be turned off, the current on an overloaded main power supply can be reduced rapidly while keeping high priority devices powered. An LTC9101-2 can be configured in either a 1-bit or 3-bit shutdown priority based on the Multibit Priority field.

In 1-bit priority mode each port can be configured to high or low priority. Specifically, if Multibit Priority is disabled, then Port Power Priority are followed for port priority and OSS action (i.e. legacy 1-bit priority). On a rising edge of the OSS HW pin, the low priority ports will be shut down within 6.5µs. An OSS event shall set OSS event and Disconnect interrupt.

APPLICATIONS INFORMATION

In 3-bit priority mode, e.g., Multibit Priority is enabled, each port can be configured to one of eight Multibit Power Priorities. When the host system wants certain group of priority ports to be shut down, it will send the matching shutdown code on the OSS pin. The LTC9101-2 compares the shutdown code received on OSS with the Multibit Power Priority of each port and shuts down ports which are less than or equal to the flagged shutdown code (see Figure 25).

If a port is turned off via OSS, the corresponding Detection and Classification Enable bits remain enabled, so the port will begin redetection.

Port Remapping

The LTC9101-2/LTC9102 supports the ability to remap ports logically. This can be achieved by writing the appropriate values into the port remapping register to achieve the remapping (see Table 16). By default, there is no remapping.

Table 16. Port Remapping

CODE	REMAPPING
00b	Port 1
01b	Port 2
10b	Port 3
11b	Port 4

Physical port remapping is unlimited; any physical port can be mapped to any logical port. When the ports are configured for 4P operation, the 4P mapping is always logical port 1 and port 2 for one 4P port and logical port 3 and port 4 for the other 4P port. Physical port mapping can map any two of the physical 2P ports to the logical 4P port: Logical port 1,2 can map to physical port 1,2; 1,3; 1,4; 2,1; 2,3; 2,4; 3,1; 3,2; 3,4; 4,1; 4,2; or 4,3.

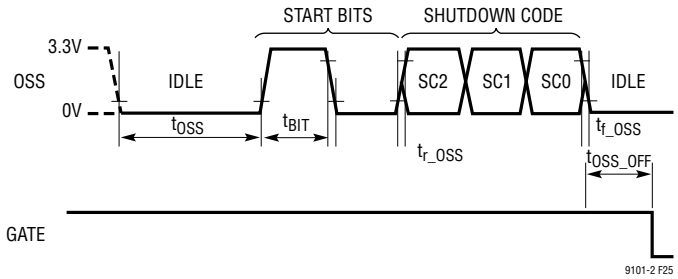

Figure 25. Multi Bit Priority Port Shutdown of Lower-Priority Port

Code Download

LTC9101-2 firmware is field-upgradable by downloading and executing firmware images.

Contact Analog Devices for code download procedures and firmware images.

Firmware images are stored in a dedicated flash partition. A fully-compliant IEEE 802.3bt firmware image is preconfigured on the LTC9101-2. The firmware image may be overwritten by the user.

Two complete copies of the firmware image are maintained under separate ECC and CRC protection for maximum data protection.

Stored Configurations

Custom I^2C register map initial values may optionally be stored in a dedicated flash partition (configuration package). When shipped from the factory, the LTC9101-2 contains a default configuration package where register map initial values are as specified in the LTC9101-2NDASI Software Interface. Register map default configurations may be stored during manufacturing bring up or field-updated via configuration package download and will be auto-loaded at boot.

Contact ADI applications support for assistance in generating custom configuration packages. Configuration packages are downloaded using normal code download mechanisms. Package headers ensure configuration packages are identified and stored in the appropriate flash partition.

If a stored configuration is utilized, the state of the PWRMD[1:0] pins can be overwritten by a configuration package. CFG[1:0] are still required to inform the LTC9101-2 how many LTC9102s are attached. AD[4:1] are still required to inform the LTC9101-2 of the base I^2C chip address.

Two identical copies of the configuration image are maintained under separate ECC and CRC protection for maximum data protection.

APPLICATIONS INFORMATION

SERIAL DIGITAL INTERFACE

Overview

The LTC9101-2 communicates with the host using a standard SMBus/I^{2}C 2-wire interface. The LTC9101-2 is a slave-only device, and communicates with the host master using standard SMBus protocols. Interrupts are signaled to the host via $\overline{INT}$. The timing diagrams (Figure 5 through Figure 9) show typical communication waveforms and their timing relationships. More information about the SMBus data protocols can be found at www.smbus.org.

Bus Addressing

The LTC9101-1's primary 7-bit serial bus address is $01A_4A_3A_2A_10b$, with bits 4:1 set by AD[4:1] respectively. See Table 4 for device configuration options. Depending on device configuration, up to 12 I^{2}C addresses will be populated from the I^{2}C base address upwards. All LTC9101-2s also respond to the broadcast address 1111111b, allowing the host to write the same command (typically configuration commands) to multiple LTC9101-2s in a single transaction. If the LTC9101-2 is asserting $\overline{INT}$, it will also respond to the alert response address (0001100b) per the SMBus specification.

Each LTC9101-2/LTC9102 is logically composed of multiple four port groups, known as quads, each packed into a single I^{2}C address. See Device Configuration section for details. For example, if CFG[1:0] is set to 00, an LTC9101-2 is configured as a 12-port device when attached to an LTC9102 (see Table 4). This configuration requires consecutive I^{2}C addresses, with quad offset 0 starting at the I^{2}C base address.

Interrupts and SMBAlert

Most port events can be configured to trigger an interrupt, asserting $\overline{INT}$ and alerting the host to the event. This removes the need for the host to poll the LTC9101-2, minimizing serial bus traffic and conserving host CPU cycles. Multiple LTC9101-2s can share a common $\overline{INT}$ line, with the host using the SMBAlert protocol (ARA) to determine which LTC9101-2 caused an interrupt.

Register Description

For information on serial bus usage and device configuration and status, refer to the LTC9101-2NDASI Software Interface guide. Contact Analog Devices to request this document.

ISOLATION REQUIREMENTS

IEEE 802.3 Ethernet specifications require that network segments (including PoE circuitry) be electrically isolated from the chassis ground of each network interface device. However, network segments are not required to be isolated from each other, provided that the segments are connected to devices residing within a single building on a single power distribution system.

If the PSE is part of a larger system, contains additional external non-Ethernet ports, or must be referenced to protective ground for some other reason, the PoE subsystem must be electrically isolated from the rest of the system.

The LTC9101-2/LTC9102 chipset simplifies PSE isolation by allowing the LTC9101-2 chip to reside on the non-isolated side. There it can receive power from the main logic supply and connect directly to the I^{2}C/SMBus bus. In this case, the SDAIN and SDAOUT pins can be tied together and will act as a standard I^{2}C/SMBus SDA pin. Isolation between the LTC9101-2 and LTC9102 is implemented using a proprietary transformer-based communication protocol. Additional details are provided in the High-Speed Data Isolation section of this data sheet.

For simple devices, such as unmanaged PoE switches, the isolation requirement can be met by using an isolated main power supply for the entire device. This strategy can be used if the device has no electrically conducting ports other than twisted-pair Ethernet. The LTC9101-2 may directly connect to the LTC9102s in the above circumstances, or if the system already provides isolation.

EXTERNAL COMPONENT SELECTION

Power Supplies

The LTC9101-2/LTC9102 requires two supply voltages to operate. V_{DD} requires 3.3V (nominally) relative to DGND.

APPLICATIONS INFORMATION

V_{EE} requires a negative voltage of between –51V to –57V for Type 3 PSEs, or –53V to –57V for Type 4 PSEs, relative to AGND.

Digital Power Supply

V_{DD} provides digital power for the LTC9101-2 processor. A ceramic decoupling cap of at least 0.1µF should be placed from each V_{DD} to DGND, as close as practical to each LTC9101-2. In addition, each LTC9101-2 must include a bulk cap of 10µF for robust surge immunity. A 1.2V core voltage supply is generated internally and requires a 1µF ceramic decoupling cap between the CAP1 pin and DGND and between CAP2 and DGND.

In systems using ADI's proprietary isolation, V_{DD} should be delivered by the host controller's non-isolated 3.3V supply. To maintain required isolation, LTC9102 AGND and LTC9101-2 DGND must not be connected. If using the direct connection scheme, the LTC9101-2 DGND must be connected to LTC9102 V_{EE}.

Main PoE Power Supply

V_{EE} is the main isolated PoE supply that provides power to the PDs. Because it supplies a relatively large amount of power and is subject to significant current transients, it requires more design care than a simple logic supply. For minimum IR loss and best system efficiency, set V_{EE} near maximum amplitude (57V), leaving enough margin to account for transient over or undershoot, temperature drift, and the line regulation specifications of the particular power supply used.

A bypass capacitor and a transient voltage suppressor (TVS) between each LTC9102 AGND and V_{EE} are very important for reliable operation. If a short circuit occurs at one of the output ports it can take as long as 1µs for the LTC9102 to begin regulating the current. During this time the current is limited only by the small impedances in the circuit; a high current spike typically occurs, causing a voltage transient on the V_{EE} supply and possibly causing the LTC9101-2/LTC9102 to reset due to a UVLO fault. A 1µF, 100V X7R capacitor and a SMAJ58A near each LTC9102 are recommended to minimize spurious resets. An electrolytic bulk capacitor of at least 47µF, 100V and a bulk TVS are also recommended per system.

LTC9102 Low Voltage Power Supplies

The LTC9102 includes internal voltage regulators that generate low voltage supplies directly from the main PoE power supply. At startup, an internal regulator generates 6V at PWRIN, drawing power from AGND. Internal 4.3V and 3.3V rails are sub-regulated from PWRIN. The PWRIN pin requires a local 1µF, 100V bypass capacitor.

Pull-up resistors can be connected from PWRIN to AGND to dissipate heat outside the LTC9102 package. Optionally, an external power supply can be connected to PWRIN to override the startup regulator and reduce power dissipation.

Figure 26 shows a pull-up resistor configuration with the internal 3.3V regulator. Bypass resistors R1, R2, R3, and R4 draw heat away from the LTC9102s. Note that the voltage of the PWRIN pin changes based on the LTC9102 operating mode and its corresponding current consumption. If more current is consumed than the bypass resistors provide, the startup regulator maintains the voltage at 6V typical. The LTC9102 can operate without the pull-up resistors in space-constrained applications.

In applications with an external PWRIN supply, a 6.5V regulator provides an optimum voltage to override the internal 6V start-up regulator, while minimizing the LTC9102 device heating. The external supply may be shared across multiple LTC9102s.

A 3.3V power supply can be connected directly to the CAP3 pin, as shown in Figure 27. This provides the most power efficient sleep mode. When supplying external 3.3V power, tie the EXT3 pin to CAP3. This will disable the internal 3.3V regulator and prevent power back-feed. The 3.3V regulator must power up within $t_{CAP3EXT}$ specified in the electrical characteristics table.

If using the direct connection scheme, the 3.3V regulator that supplies the LTC9101-2 can also supply the LTC9102s. This is the preferred option when the LTC9101-2 and LTC9102 are on the same side of the system isolation barrier.

APPLICATIONS INFORMATION

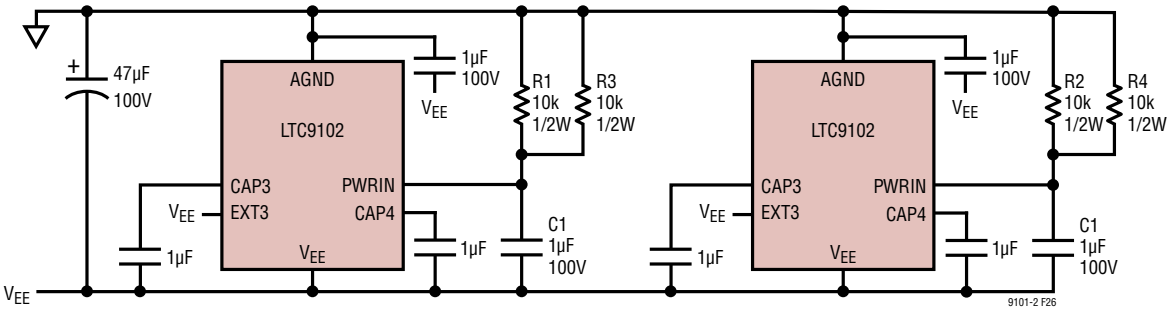

Figure 26. Power Supply Configuration with Internal 3.3V Supply

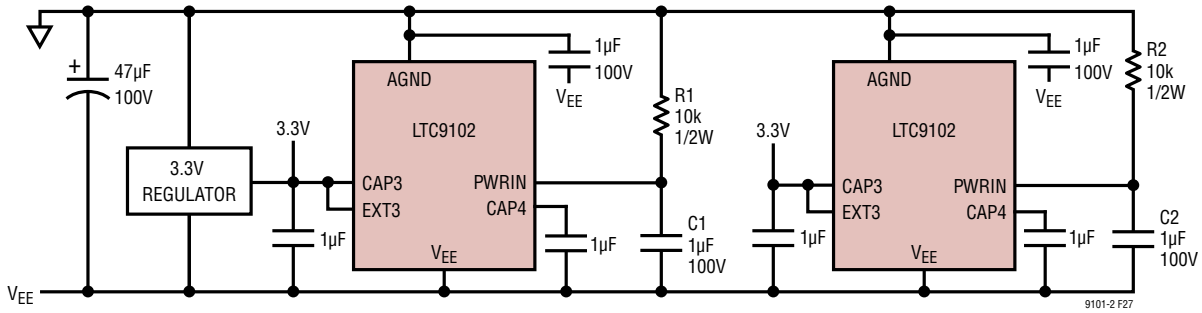

Figure 27. Power Supply Configuration with External 3.3V Regulators

High-Speed Data Isolation

The LTC9101-2/LTC9102 chipset can either provide proprietary isolation or rely on existing system isolation. Significant BOM cost reductions can be achieved using the proprietary isolation scheme.

In the proprietary isolation scheme, the LTC9101-2/LTC9102 chipset uses transformers to isolate the LTC9101-2 from one to four LTC9102s (see Figure 28). In this case, the SDAIN and SDAOUT pins can be shorted to each other and tied directly to the I^2C/SMBus bus. The transformers should be 10Base-T or 10/100Base-T with a 1:1 turns ratio. Optimally, the selected transformers do not have common-mode chokes. These transformers typically provide 1500V of isolation between the LTC9101-2 and the LTC9102s. For proper operation, strict layout guidelines must be met.

In the direct connection scheme, the LTC9101-2/LTC9102 chipset relies on pre-existing system isolation. In this scheme, the LTC9101-2 connects directly to one or more LTC9102s using a proprietary communication protocol (see Figure 29).

External MOSFET

Careful selection of the power MOSFET is critical to system reliability. Choosing a MOSFET requires extensive analysis and testing of the MOSFET SOA curve against the various PSE current limit conditions. ADI recommends the PSMN075-100MSE for PSEs configured to deliver up to 51W maximum port power (single-signature) or 25.5W maximum pairset power (dual-signature). For PSEs configured to power up to 71.3W maximum port power (single-signature) or 35.6W maximum pairset power (dual-signature), ADI recommends the PSMN040-100MSE. These MOSFETs are selected for their proven reliability in PoE applications. Contact ADI Applications before using a MOSFET other than one of these recommended parts.

Sense Resistors

The LTC9101-2/LTC9102 is designed for a low 0.1Ω current sense resistance per channel, laid out as shown in the Layout Requirements section, Figure 31. In order to meet the $I_{HOLD-2P}$, and I_{LIM-2P} accuracy required by the IEEE specification, the sense resistors should have ±1%

APPLICATIONS INFORMATION

tolerance or better, and no more than ±200ppm/°C temperature coefficient.

Port Output Cap

Each port requires a 0.1µF cap across OUTn to AGND (see Figure 30) to keep the LTC9102 stable while in current limit during startup or overload. Common ceramic capacitors often have significant voltage coefficients; this means the capacitance is reduced as the applied voltage increases. To minimize this problem, X7R ceramic capacitors rated for at least 100V are recommended and must be located close to the LTC9102.

Surge Protection

Ethernet ports can be subject to significant cable surge events. To keep PoE voltages below a safe level and protect the application against damage, protection components, as shown in Figure 30, are required at the main supply, at the LTC9102 supply pins, and at each port.

Bulk transient voltage suppression (TVS_{BULK}) and bulk capacitance (C_{BULK}) are required across the main PoE supply and should be sized to accommodate system level surge requirements.

Across each LTC9102 AGND pin and V_{EE} pin is a SMAJ58A 58V TVS (D1) and a 1µF, 100V bypass capacitor (C1). These components must be placed close to the LTC9102 pins.

Each port requires an S1B clamp diode from OUTn to supply AGND. This diode steers harmful surges into the supply rails where they are absorbed by the surge suppressors and the V_{EE} bypass capacitance. The layout of these paths must be low impedance.

APPLICATIONS INFORMATION

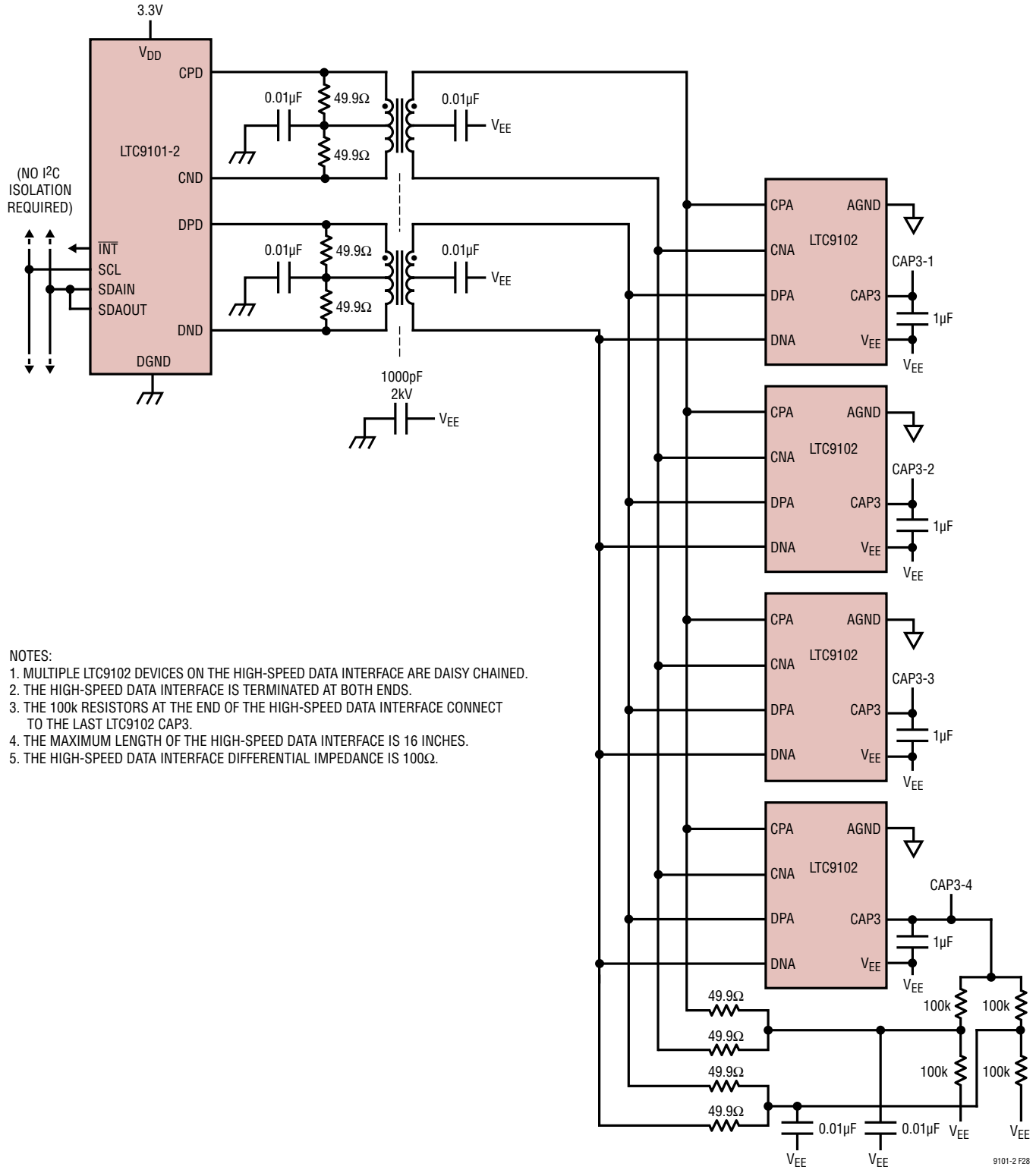

NOTES:
1. MULTIPLE LTC9102 DEVICES ON THE HIGH-SPEED DATA INTERFACE ARE DAISY CHAINED.
2. THE HIGH-SPEED DATA INTERFACE IS TERMINATED AT BOTH ENDS.
3. THE 100k RESISTORS AT THE END OF THE HIGH-SPEED DATA INTERFACE CONNECT TO THE LAST LTC9102 CAP3.
4. THE MAXIMUM LENGTH OF THE HIGH-SPEED DATA INTERFACE IS 16 INCHES.
5. THE HIGH-SPEED DATA INTERFACE DIFFERENTIAL IMPEDANCE IS 100Ω.

Figure 28. LTC9101-2/LTC9102 Proprietary Isolation Scheme

APPLICATIONS INFORMATION

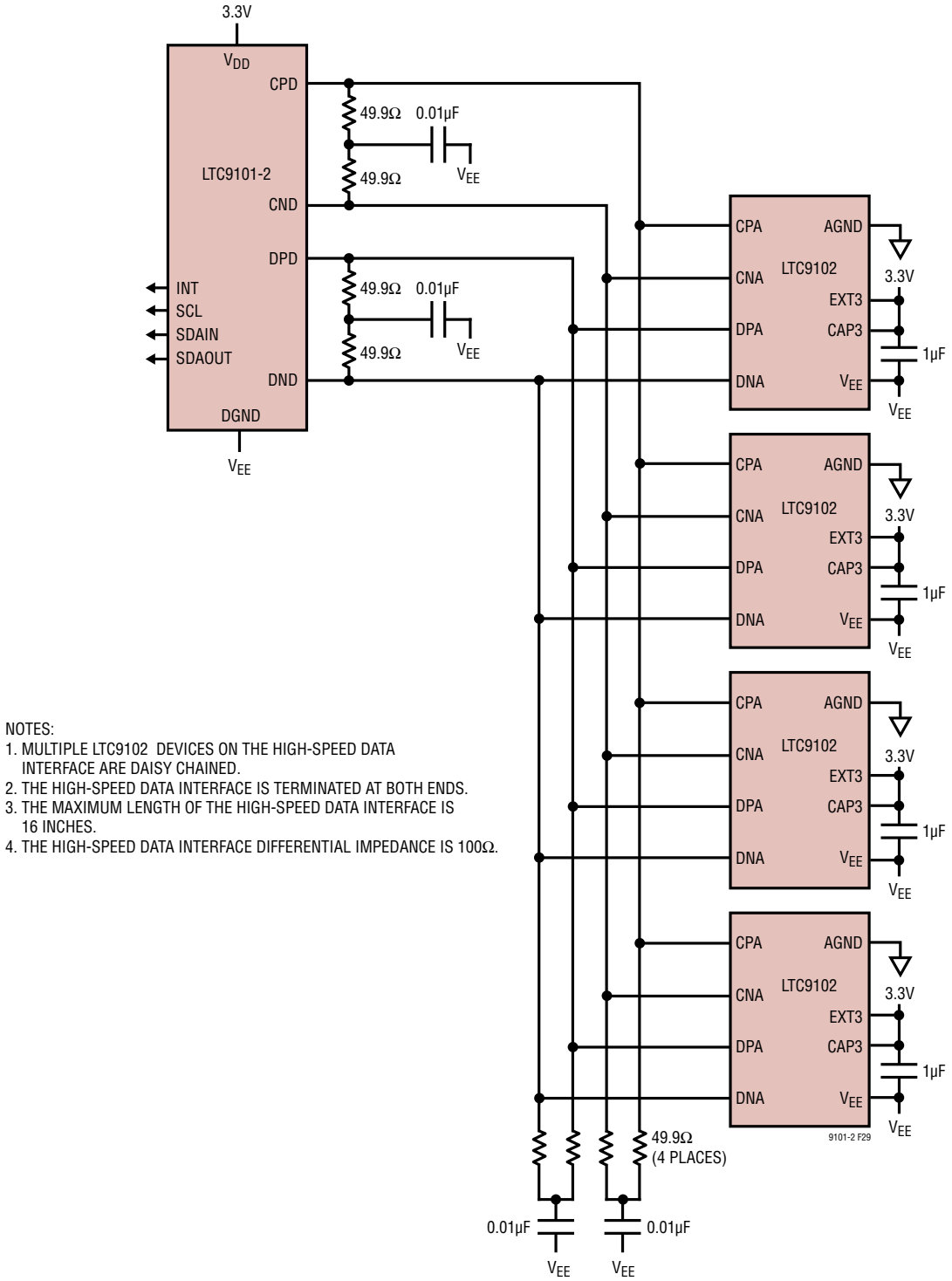

NOTES:
1. MULTIPLE LTC9102 DEVICES ON THE HIGH-SPEED DATA INTERFACE ARE DAISY CHAINED.
2. THE HIGH-SPEED DATA INTERFACE IS TERMINATED AT BOTH ENDS.
3. THE MAXIMUM LENGTH OF THE HIGH-SPEED DATA INTERFACE IS 16 INCHES.
4. THE HIGH-SPEED DATA INTERFACE DIFFERENTIAL IMPEDANCE IS 100Ω.

Figure 29. LTC9101-2/LTC9102 Direct Connection Scheme

APPLICATIONS INFORMATION

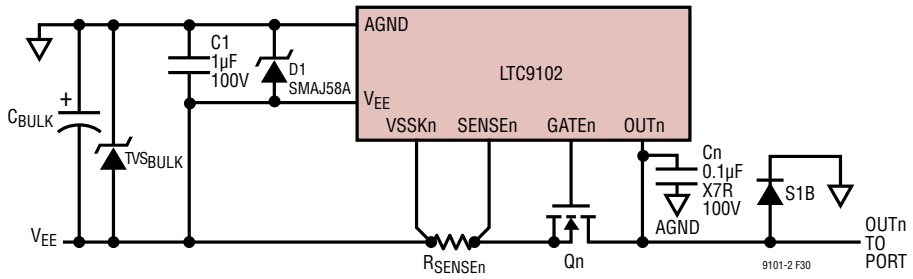

Figure 30. LTC9102 Surge Protection

Table 17. Component Selection for PSE Maximum Class

PSE CLASS	SENSE RESISTOR	HOT SWAP MOSFET	FUSE	ETHERNET TRANS-FORMER
Class 3	100mΩ, 1%, 50mW	PSMN075-100MSE	SF-0603HI075F-2	7490220120
Class 4	100mΩ, 1%, 100mW	PSMN075-100MSE	SF-0603HI100F-2	7490220121
Class 6	100mΩ, 1%, 100mW	PSMN040-100MSE	SF-0603HI100F-2	7490220121
Class 8	100mΩ, 1%, 200mW	PSMN040-100MSE	SF-0603HI150F-2	7490220122

APPLICATIONS INFORMATION

LAYOUT REQUIREMENTS

Strict adherence to board layout, parts placement and routing requirements is critical for IEEE compliance, parametric measurement accuracy, system robustness and thermal dissipation. Refer to the DC3160A-KIT demo kit for example layout references.

Kelvin Sense

Proper connection of the port current Kelvin sense lines is important for current threshold accuracy and IEEE compliance. Refer to Figure 31 for an example layout of these Kelvin sense lines. The LTC9102 VSSKn pin is Kelvin connected to the sense resistor (V_{EE} side) pad and is not otherwise connected to V_{EE} copper areas. Similarly, the LTC9102 SENSEn pin is Kelvin connected to the sense resistor (SENSEn side) pad and is not otherwise connected in the power path. Figure 31 shows the two Kelvin traces from the LTC9102 to the sense resistor (R_{SENSEn}).

High-Speed Data Interface

The LTC9101-2/LTC9102 chipset communicates across a proprietary high-speed, multi-drop data interface. This allows for a single LTC9101-2 to control up to four LTC9102s.

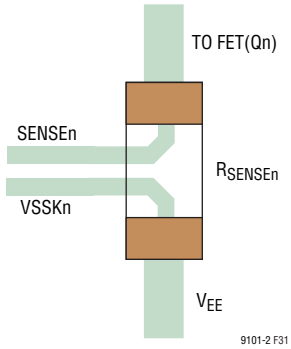

Figure 31. R_{SENSE} Kelvin Connections

The data-lines require impedance matched traces to each LTC9102. The data bus termination resistors must be located at the LTC9102 farthest away from the isolation transformers. For isolated applications, the DC biasing resistors must connect to the LTC9102 CAP3 pin, farthest away from the isolation transformers. As shown in Figure 28 and Figure 29, design the interface with 100Ω differential transmission lines, and terminate 100Ωs differentially. Limit the high-speed data interface line length to 16 inches. Minimize the transmission stubs between the LTC9102s and the high-speed data interface.

TYPICAL APPLICATIONS

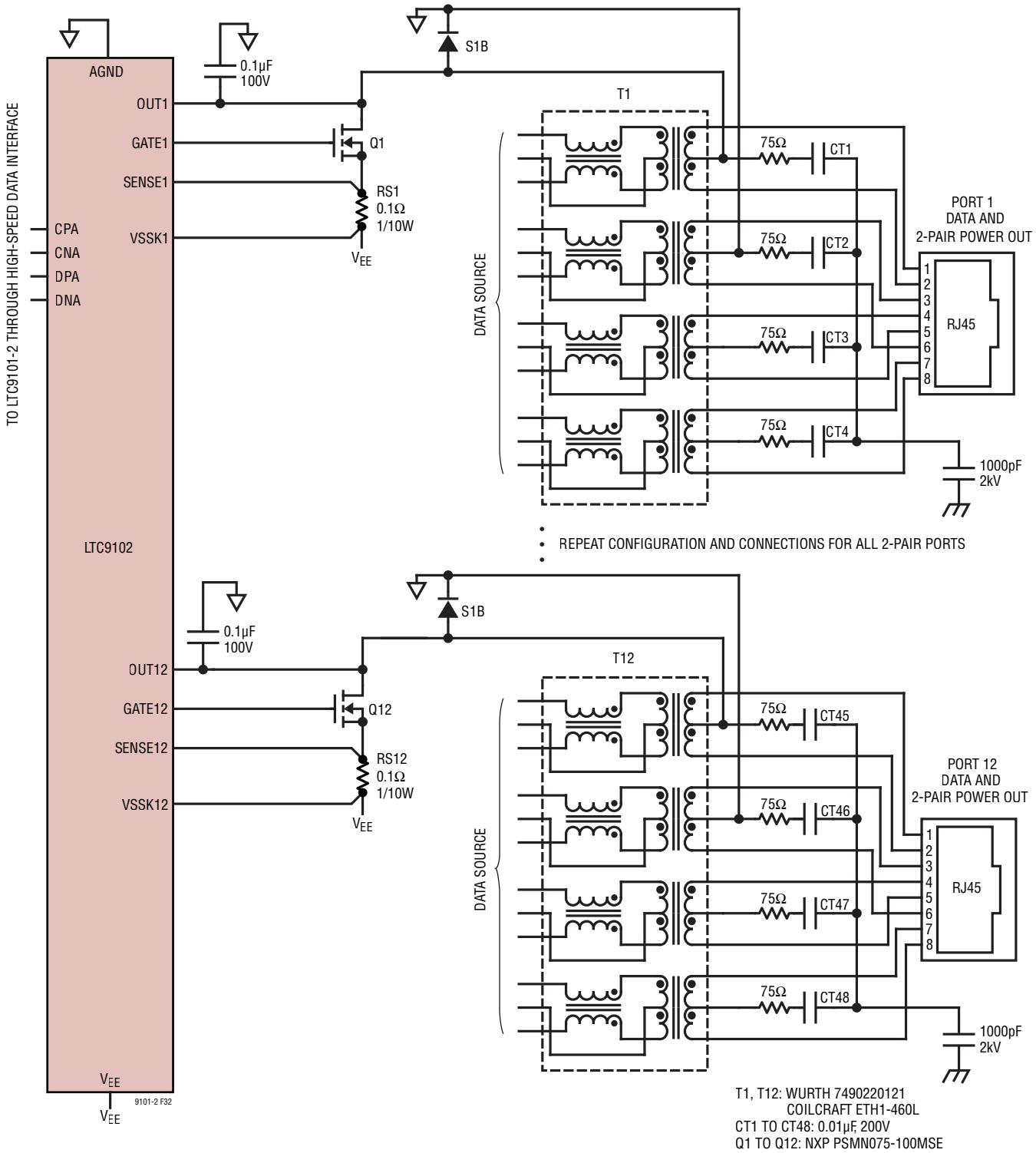

Figure 32. Alternative A (MDI-X) and B (S), 4-Pair, 1000Base-T, IEEE 802.3bt, Type 3 or Type 4 PSE, Ports 1 and 6 Shown

TYPICAL APPLICATIONS

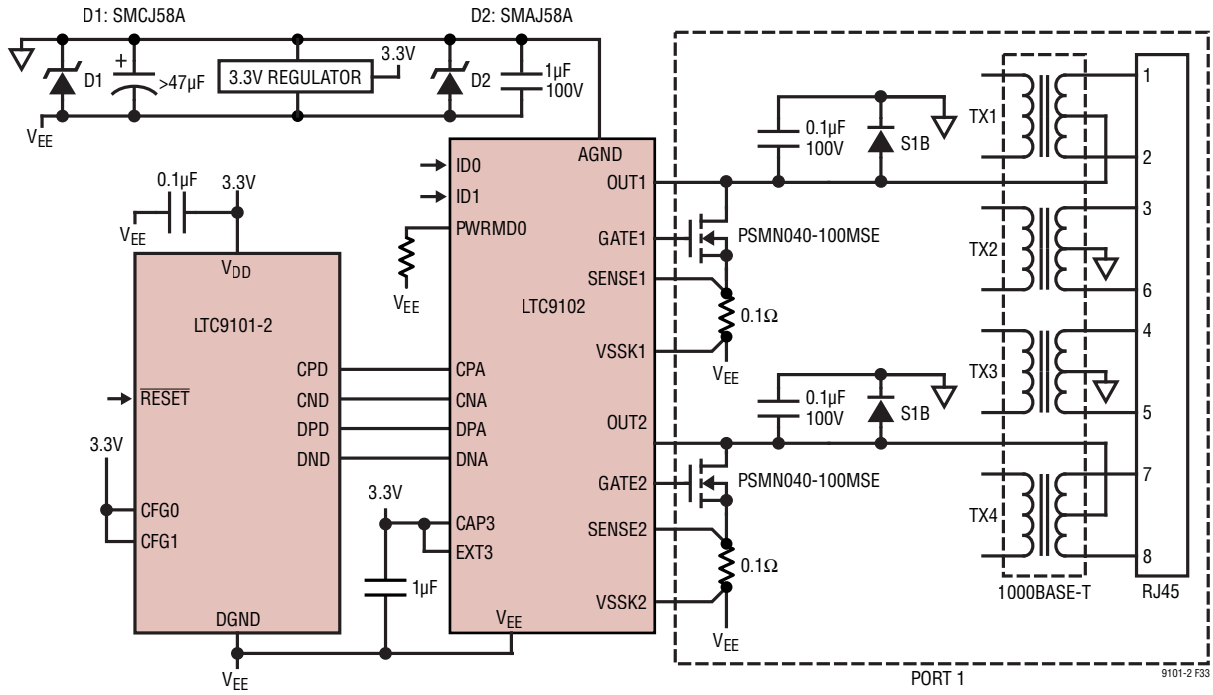

Figure 33. Autonomous IEEE 802.3bt 4-Pair PSE, Type 3 or Type 4, Alternative A (MDI-X) and B (S), 1000Base-T, 1 Port Shown

PACKAGE DESCRIPTION

UF Package
24-Lead Plastic QFN (4mm × 4mm)
(Reference LTC DWG # 05-08-1697 Rev B)

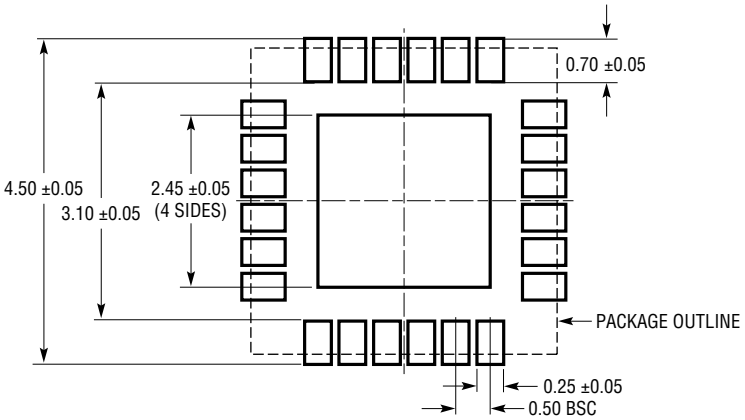

RECOMMENDED SOLDER PAD PITCH AND DIMENSIONS

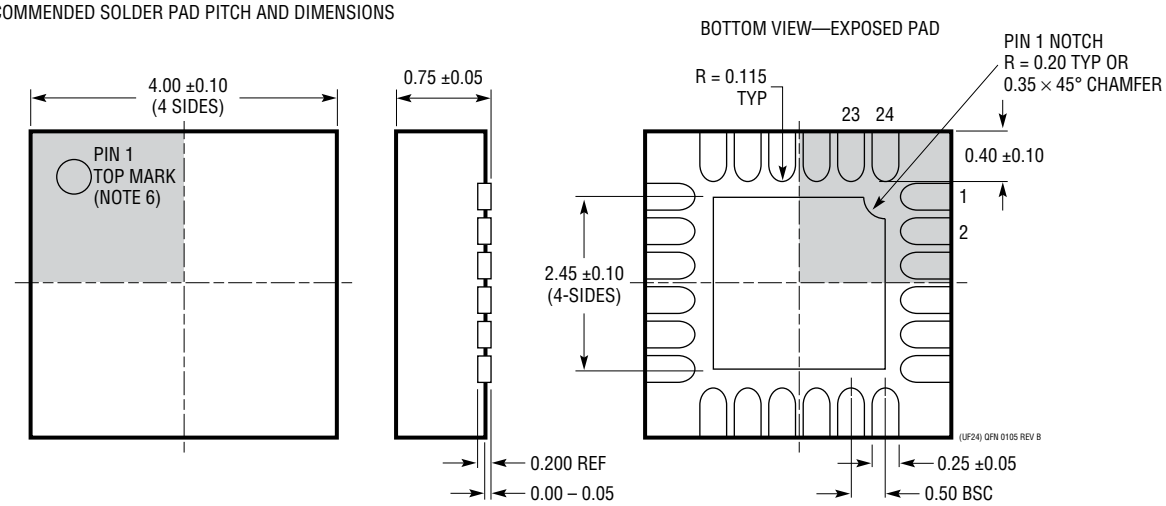

NOTE:
1. DRAWING PROPOSED TO BE MADE A JEDEC PACKAGE OUTLINE MO-220 VARIATION (WGGD-X)—TO BE APPROVED
2. DRAWING NOT TO SCALE
3. ALL DIMENSIONS ARE IN MILLIMETERS
4. DIMENSIONS OF EXPOSED PAD ON BOTTOM OF PACKAGE DO NOT INCLUDE MOLD FLASH. MOLD FLASH, IF PRESENT, SHALL NOT EXCEED 0.15mm ON ANY SIDE, IF PRESENT
5. EXPOSED PAD SHALL BE SOLDER PLATED
6. SHADED AREA IS ONLY A REFERENCE FOR PIN 1 LOCATION ON THE TOP AND BOTTOM OF PACKAGE

PACKAGE DESCRIPTION

UKJ Package
64-Lead Plastic QFN (7mm × 11mm)
(Reference LTC DWG # 05-08-1780 Rev 0)

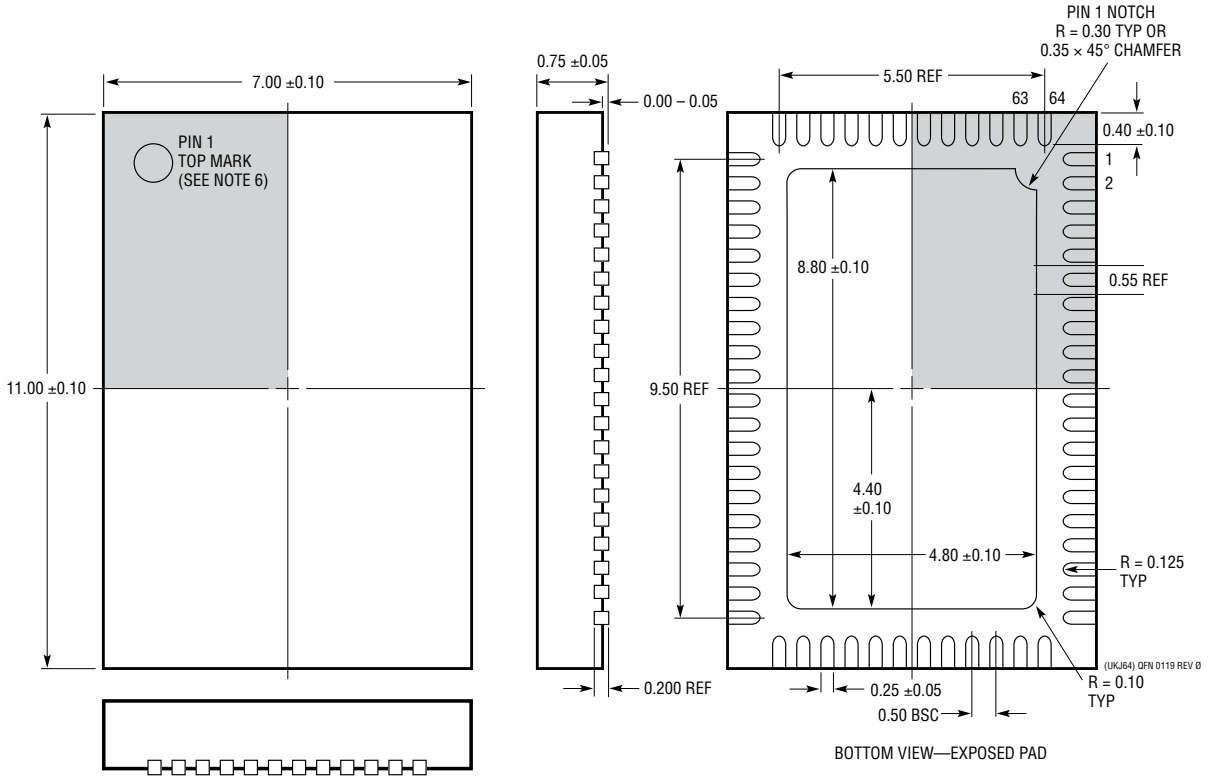

NOTE:
1. DRAWING IS NOT A JEDEC PACKAGE OUTLINE
2. DRAWING NOT TO SCALE
3. ALL DIMENSIONS ARE IN MILLIMETERS
4. DIMENSIONS OF EXPOSED PAD ON BOTTOM OF PACKAGE DO NOT INCLUDE MOLD FLASH. MOLD FLASH, IF PRESENT, SHALL NOT EXCEED 0.20mm ON ANY SIDE
5. EXPOSED PAD SHALL BE SOLDER PLATED
6. SHADED AREA IS ONLY A REFERENCE FOR PIN 1 LOCATION ON THE TOP AND BOTTOM OF PACKAGE

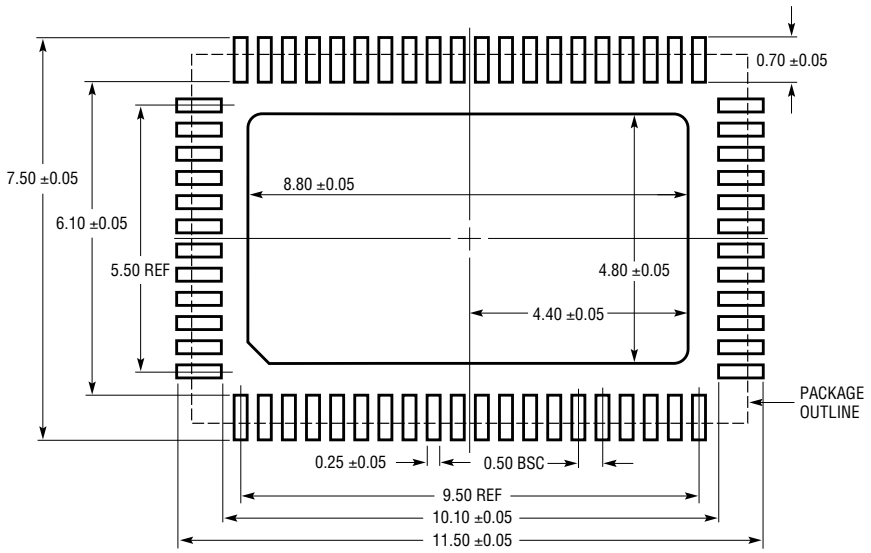

APPLY SOLDER MASK TO AREAS THAT ARE NOT SOLDERED

Information furnished by Analog Devices is believed to be accurate and reliable. However, no responsibility is assumed by Analog Devices for its use, nor for any infringements of patents or other rights of third parties that may result from its use. Specifications subject to change without notice. No license is granted by implication or otherwise under any patent or patent rights of Analog Devices.

TYPICAL APPLICATION

IEEE 802.3bt Type 3 or Type 4 PSE, Alternative A (MDI-X) and B (S), 1000Base-T, 1 Port Shown

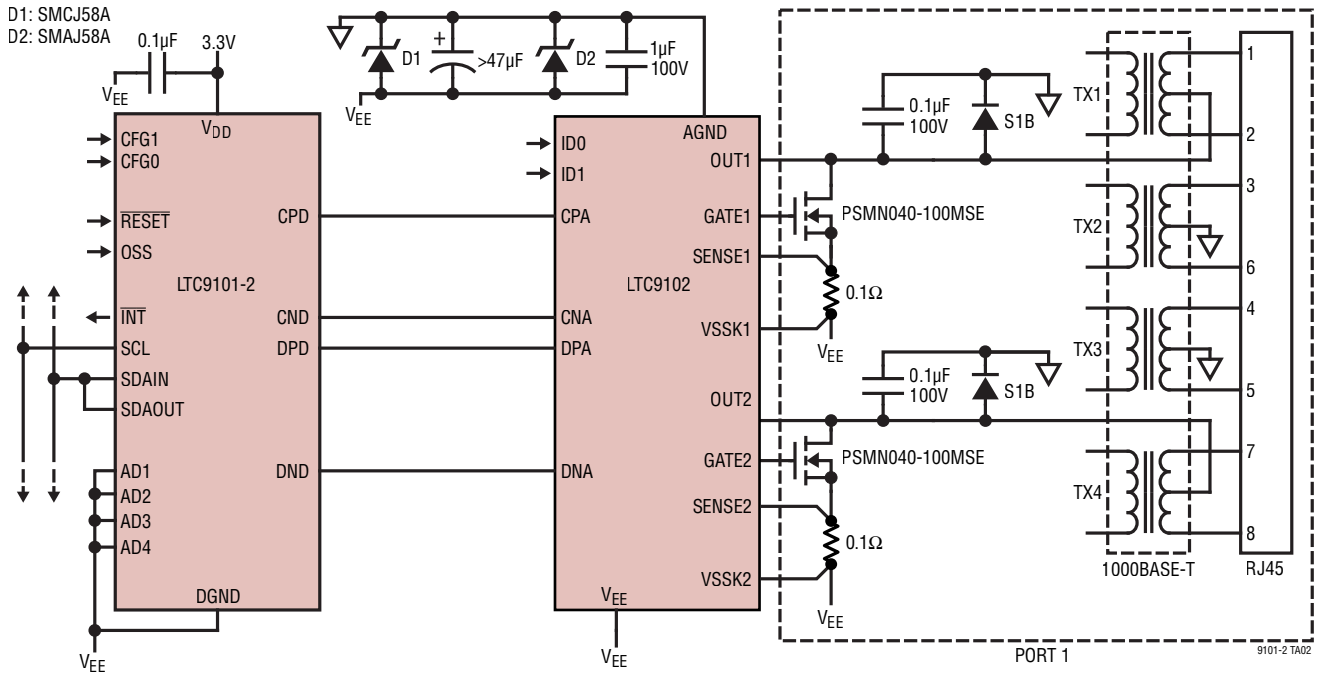

RELATED PARTS

PART NUMBER	DESCRIPTION	COMMENTS
LTC9101-1/LTC9102/LTC9103	48-Port IEEE 802.3bt PoE PSE Controller	Lowest in Industry Power Path Dissipation with 0.1Ω Sense, Transformer Isolated Communications
LTC4292/LTC4291-1	4-Port IEEE 802.3bt PoE PSE Controller	Transformer Isolation, 14-bit Current Monitoring per Port with Programmable Current Limit, Supports Type 1-4 PDs
LT®4293	LTPoE++/IEEE 802.3bt PD Interface Controller	External Switch, LTPoE++ and IEEE 802.3bt Support, Configurable Class and AUX Support
LT4294	IEEE 802.3bt PD Controller	External Switch, IEEE 802.3bt Support, Configurable Class and AUX Support
LT4295	IEEE 802.3bt PD with Forward/Flyback Switching Regulator Controller	External Switch, IEEE 802.3bt Support, Configurable Class, Forward or No-Opto Flyback Operation, Frequency, PG/SG Delays, Soft-Start, and Aux Support as Low as 9V, Including Housekeeping Buck, Slope Compensation
LTC4290/LTC4271	8-Port PoE/PoE+/LTPoE++ PSE Controller	Transformer Isolation, Supports IEEE 802.3af, IEEE 802.3at and LTPoE++ PDs
LTC4263	Single IEEE 802.3af PSE Controller	Internal MOSFET Switch
LTC4265	IEEE 802.3at PD Interface Controller	Internal 100V, 1A Switch, 2-Event Classification Recognition
LTC4266	Quad IEEE 802.3at PoE PSE Controller	With Programmable I_{CUT}/I_{LIM}, 2-Event Classification, and Port Current and Voltage Monitoring
LTC4267	IEEE 802.3af PD Interface with Integrated Switching Regulator	Internal 100V, 400mA Switch, Dual Inrush Current, Programmable Class
LTC4270/LTC4271	12-Port PoE/PoE+/LTPoE++® PSE Controller	Transformer Isolation, Supports Type 1, Type 2 and LTPoE++ PDs
LTC4278	IEEE 802.3at PD Interface with Integrated Flyback Switching Regulator	2-Event Classification, Programmable Class, Synchronous No-Opto Flyback Controller, 50kHz to 250kHz, 12V Aux Support
LTC4279	Single PoE/PoE+/LTPoE++ PSE Controller	Supports IEEE 802.3af, IEEE 802.3at, LTPoE++ and Proprietary PDs

© ANALOG DEVICES, INC. 2022