Honeywell

Interactive Catalog Replaces Catalog Pages

Honeywell Sensing and Control has replaced the PDF product catalog with the new Interactive Catalog. The Interactive Catalog is a power search tool that makes it easier to find product information. It includes more installation, application, and technical information than ever before.

CHECK THIS OUT!
Sensing and Control
Interactive Catalog...

Click this icon to try the new Interactive Catalog.

Sensing and Control
Honeywell Inc.
11 West Spring Street
Freeport, Illinois 61032

Pressure Sensors

Low Pressure Differential, Gage, Vacuum Gage/Amplified

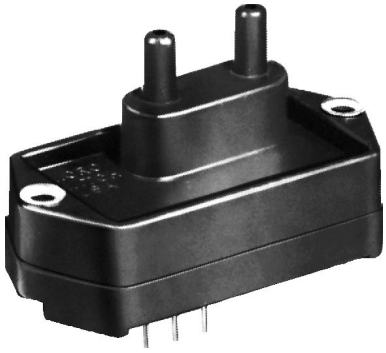

FEATURES
- Low pressure measurement
- PCB terminals on opposite side from the ports
- Fully signal conditioned

160PC SERIES PERFORMANCE CHARACTERISTICS at 8.0 ±0.01 VDC Excitation, 25°C (Exception 163PC at 10 ±0.01 VDC Excitation, 25°C)

	Min.	Typ.	Max.	Units
Excitation	6.00	8.00	16	VDC
Supply Current	---	8.00	20	mA
Current Sourcing Output	---	---	10	mA
Null Offset (161/162/164PC)*	0.95	1.00	1.05	V
Null Offset (163PC)**	3.45	3.50	3.55	V
Output at Full Pressure (161/162/164PC)	5.90	6.00	6.10	V
Output at Full Vacuum (163PC)	0.80	1.00	1.20	V
Span (161/162/164PC)	4.85	5.00	5.15	V
Span (163PC)**	---	5.00	---	V
Ratiometricity Error				
7 to 8 V or 8 to 9 V	---	±0.50	---	%Span
9 to 12 V	---	±2.00	---	
Stability over One Year	---	±0.50	---	%Span
Response Time	---	---	1.00	msec
Weight	---	28	---	grams
Short Circuit Protection	Output may be shorted indefinitely to ground			
Output Ripple	None, DC device			
Ground Reference	Supply and output are common			

*Positive (or negative) pressure measurement.
**Positive AND negative pressure measurement.

ENVIRONMENTAL SPECIFICATIONS

Operating Temperature	−40° to +85°C (−40° to +185°F)	
Storage Temperature	−55° to +125°C (−67° to +257°F)	
Compensated Temperature	−18° to +63°C (0° to +145°F)	
Shock	MIL-STD-202, Method 213 (50 g, half sine, 6 msec)	
Vibration	MIL-STD-202, Method 204 (10 to 2000 Hz at 10 g)	
Media	P2 port	Wetted materials; polyester housing, epoxy adhesive, silicon, borosilicate glass,and silicon-to-glass bond*
	P1 port	Dry gases only

*Liquid media containing some highly ionic solutions could potentially neutralize the chip-to-glass tube bond.

160PC SERIES ORDER GUIDE, VACUUM GAGE AND GAGE TYPE

Catalog Listing	Pressure Range ″H_2O	Shift Null, Sensitivity, Combined** 25 to 5° 25 to 45°C Max.	25 to −18° 25 to +63°C Max.	25 to −40° 25 to 85°C Max.	Sensitivity V/″H_2O	Overpressure psi Max.	Linearity, B.F.S.L. %Span P2 > P1 Max.	P2 < P1 Max.	Repeatability & Hysteresis %Span Typ.
161PC01D	0-27.68	---	±1.00	±2.00	0.18	5	---	±1.00	±0.15 Vacuum Gage
162PC01G	0-27.68	---	±1.00	±2.00	0.18	5	---	±1.00	±0.15 Gage

160PC SERIES ORDER GUIDE, DIFFERENTIAL TYPE

Catalog Listing	Pressure Range ″H_2O	Shift Null, Sensitivity, Combined** 25 to 5° 25 to 45°C Max.	25 to −18° 25 to +63°C Max.	25 to −40° 25 to 85°C Max.	Sensitivity V/″H_2O	Overpressure psi Max.	Linearity, B.F.S.L. %Span P2 > P1 Max.	P2 < P1 Max.	Repeatability & Hysteresis %Span Typ.
162PC01D	0-27.68	---	±1.00	±2.00	0.18	5	±2.00	---	±0.15
163PC01D36	±5	±1.00	---	---	0.50	5	±2.00	±1.00	±0.25
164PC01D37	0-10	±1.00	---	---	0.50	5	±2.00	---	±0.25
163PC01D75	±2.5	±1.25	---	---	1.00	5	±2.00	±1.00	±0.25
164PC01D76	0-5	±1.25	---	---	1.00	5	±2.00	---	±0.25

160PC SERIES ORDER GUIDE, DIFFERENTIAL TYPE @ 10 VDC ±0.01 EXCITATION, 25°C

Catalog Listing	Pressure Range cmH_2O	Shift Null, Sensitivity, Combined** 25 to 5° 25 to 45°C Max.	25 to −18° 25 to +63°C Max.	25 to −40° 25 to 85°C Max.	Sensitivity V/cmH_2O	Overpressure cmH_2O Max.	Linearity, B.F.S.L. %Span P2 > P1 Max.	P2 < P1 Max.	Repeatability & Hysteresis %Span Typ.
163PC01D48	−20 to +120	±0.75*	---	---	0.36	350	±1.5	---	±0.15

*Null shift. Span shift is ±1.00/Span
**% Span specification applies to each shift independently (Null, Sensitivity, or Combined)

Low Pressure Differential, Gage, Vacuum Gage/Amplified

INTERNAL CIRCUITRY

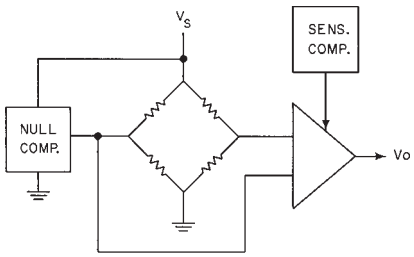

NOTES

1. Terminals are labeled on the sensor.
2. Input and output share a common ground.
3. R_L must be greater than or equal to 3000 ohms.

RATIOMETRICITY

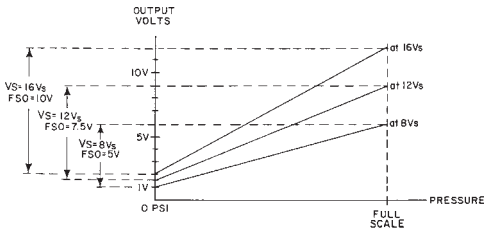

Ratiometricity refers to the output voltage being directly proportional to supply voltage. 160PC sensors in this catalog are calibrated at 8 VDC supply voltage (except 163PC) to provide a 1-6 volt (5 V Span) output swing. For example, if supply increases by 50% to 12 VDC, the output voltage increased by 50% to 1.5-9 volts (7.5 V Span).

NOTE

The output is not perfectly ratiometric. See Accuracy specifications for the degree of error.

NULL AND SENSITIVITY TEMPERATURE SHIFT

Amplified pressure sensor are 100% tested to insure that the maximum null and sensitivity temperature shift does not exceed the specification. The diagram below illustrates how null and sensitivity shift relates to temperature. Note that the maximum shift occurs at temperature extremes. Therefore, if a sensor is not exposed to the entire temperature range, the maximum null and sensitivity shift will actually be less than the value specified.

This diagram indicates the temperature shift pertaining to a few listings. Maximum null and sensitivity shift varies from listing to listing.

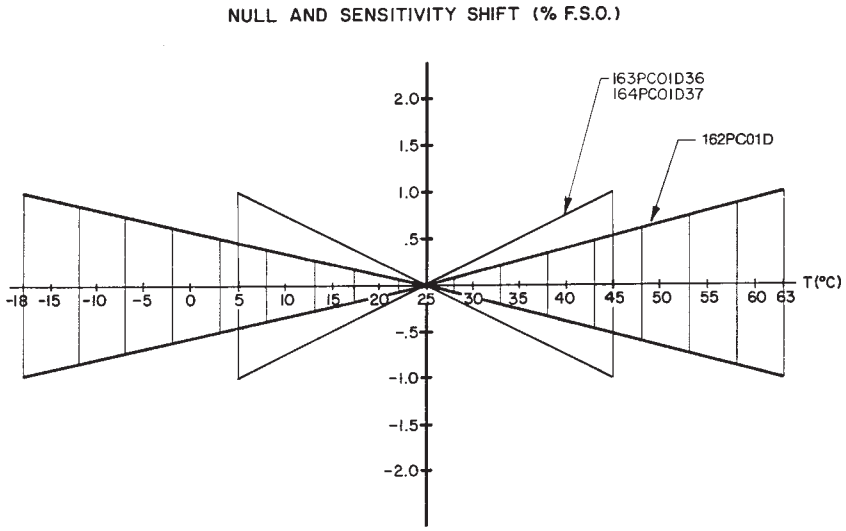

SCALING OF 160PC SERIES SENSORS WITH 8V EXCITATIONS

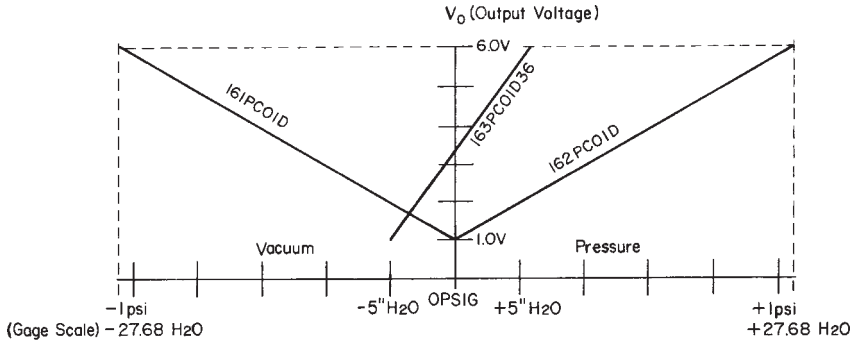

161PC01D	Vacuum Gage	V_o = 1 V at 0 psig & 6 V at −1 psig
162PC01D	Differential	V_o = 1 V at 0 psig & 6 V at 1 psig
163PC01D36	Differential	V_o = 1 V at −5″ H_2O & 6 V at −5″ H_2O

NOTE: 161PC sensors are scaled for greater pressure on the P1 side of the chip. 162PC sensors are scaled for greater pressure on the P2 side of the chip. Other scalings available upon request.

Low Pressure Differential, Gage, Vacuum Gage/Amplified

MOUNTING DIMENSIONS (For reference only)

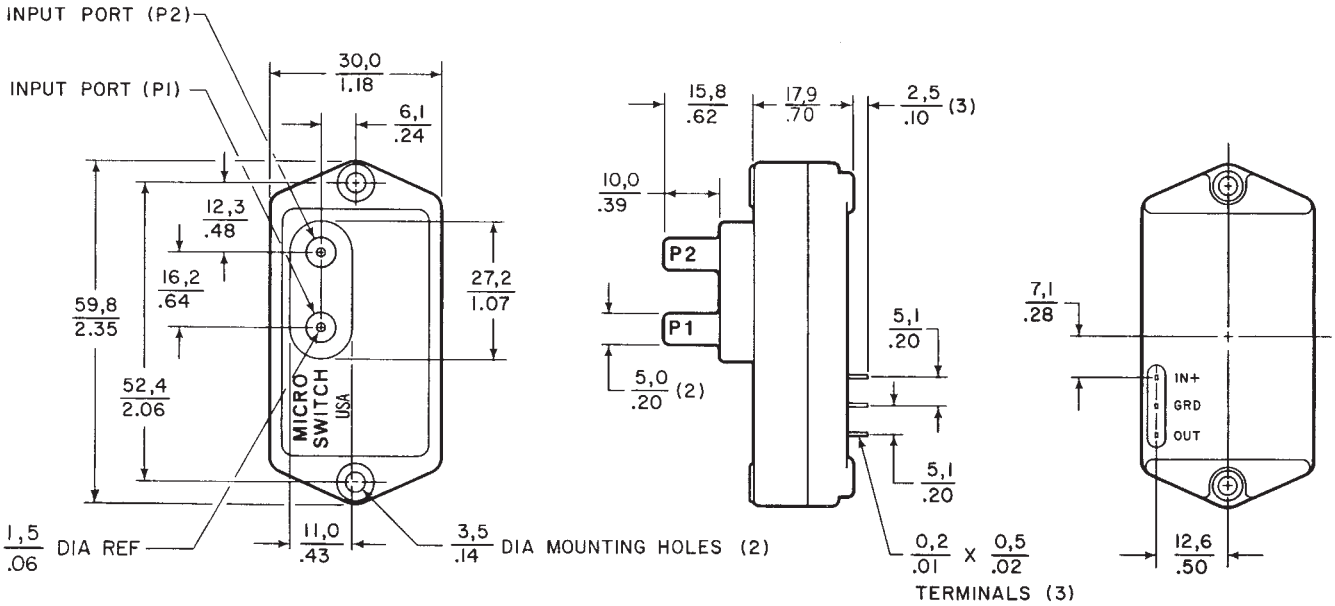
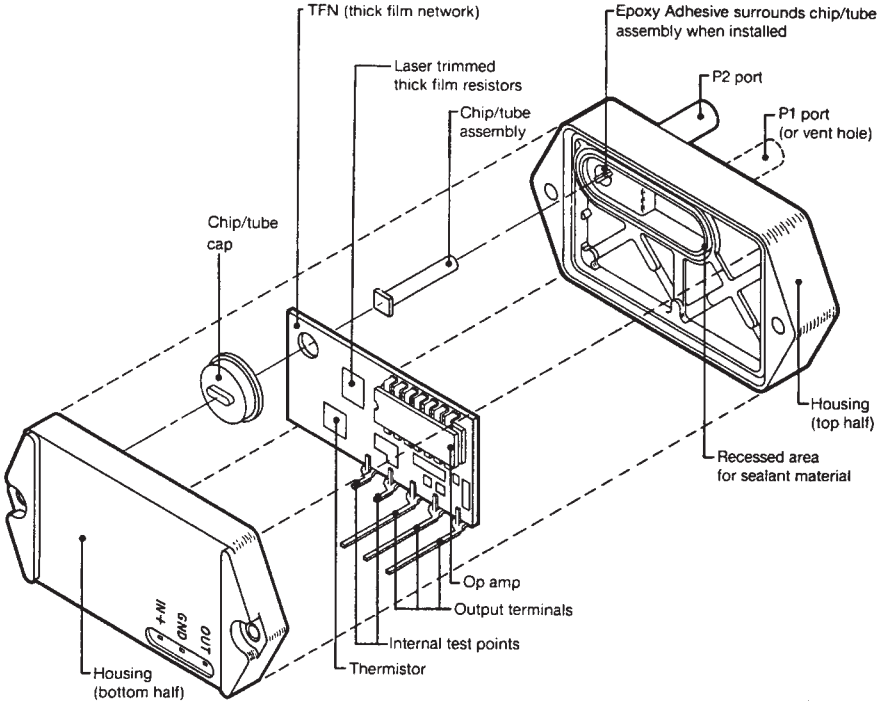
160PC CONSTRUCTION