NLSX3012

2-Bit 100 Mb/s Configurable Dual-Supply Level Translator

The NLSX3012 is a 2−bit configurable dual−supply bidirectional level translator without a direction control pin. The I/O V_{CC}− and I/O V_L−ports are designed to track two different power supply rails, V_{CC} and V_L respectively. The V_{CC} supply rail is configurable from 1.3 V to 4.5 V while the V_L supply rail is configurable from 0.9 V to (V_{CC} − 0.4) V. This allows lower voltage logic signals on the V_L side to be translated into higher voltage logic signals on the V_{CC} side, and vice−versa. Both I/O ports are auto−sensing; thus, no direction pin is required.

The Output Enable (EN) input, when Low, disables both I/O ports by putting them in 3−state. This significantly reduces the supply currents from both V_{CC} and V_L. The EN signal is designed to track V_L.

Features

- Wide High−Side V_{CC} Operating Range: 1.3 V to 4.5 V
  Wide Low−Side V_L Operating Range: 0.9 V to (V_{CC} − 0.4) V
- High−Speed with 140 Mb/s Guaranteed Date Rate for V_L > 1.8 V
- Low Bit−to−Bit Skew
- Overvoltage Tolerant Enable and I/O Pins
- Non−preferential Powerup Sequencing
- Small packaging: UDFN8, SO−8, Micro8
- These are Pb−Free Devices

Typical Applications

- Mobile Phones, PDAs, Other Portable Devices
- PC and Laptops

ON Semiconductor®

http://onsemi.com

MARKING DIAGRAMS

UDFN8
MU SUFFIX
CASE 517AJ

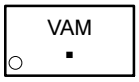

VA = Specific Device Code
M = Date Code
▪ = Pb−Free Package

SO−8
D SUFFIX
CASE 751

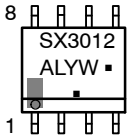

A = Assembly Location
L = Wafer Lot
Y = Year
W = Work Week
▪ = Pb−Free Package

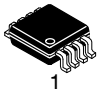

Micro8
DM SUFFIX
CASE 846A

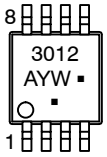

A = Assembly Location
Y = Year
W = Work Week
▪ = Pb−Free Package

ORDERING INFORMATION

Device	Package	Shipping†
NLSX3012MUTAG	UDFN8 (Pb−Free)	3000/Tape & Reel
NLSX3012DR2G	SO−8 (Pb−Free)	2500/Tape & Reel
NLSX3012DMR2G	Micro8 (Pb−Free)	4000/Tape & Reel

†For information on tape and reel specifications, including part orientation and tape sizes, please refer to our Tape and Reel Packaging Specification Brochure, BRD8011/D.

© Semiconductor Components Industries, LLC, 2011

September, 2011 − Rev. 2
Publication Order Number:
NLSX3012/D

LOGIC DIAGRAM

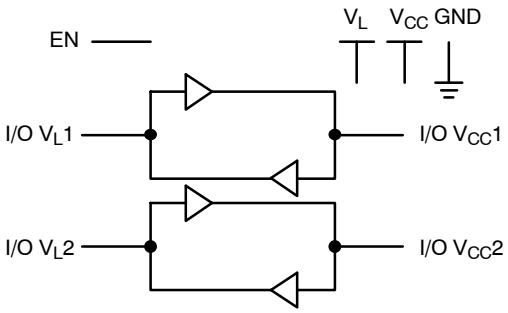

PIN ASSIGNMENTS

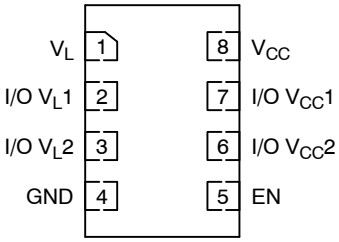

UDFN8
(Top View)

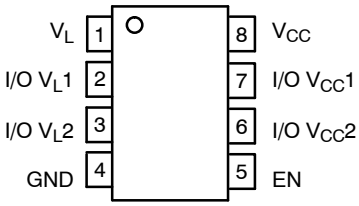

SOIC−8
(Top View)

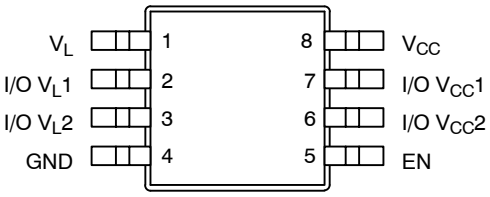

Micro8
(Top View)

PIN ASSIGNMENT

Pins	Description
V_{CC}	V_{CC} Input Voltage
V_L	V_L Input Voltage
GND	Ground
EN	Output Enable
I/O V_{CC}n	I/O Port, Referenced to V_{CC}
I/O V_Ln	I/O Port, Referenced to V_L

FUNCTION TABLE

EN	Operating Mode
L	Hi−Z
H	I/O Buses Connected

MAXIMUM RATINGS

Symbol	Parameter	Value	Condition	Unit
V_{CC}	V_{CC} Supply Voltage	−0.5 to +5.5		V
V_L	V_L Supply Voltage	−0.5 to +5.5		V
I/O V_{CC}	V_{CC}−Referenced DC Input/Output Voltage	−0.5 to (V_{CC} + 0.3)		V
I/O V_L	V_L−Referenced DC Input/Output Voltage	−0.5 to (V_L + 0.3)		V
V_{EN}	Enable Control Pin DC Input Voltage	−0.5 to +5.5		V
I_{IK}	Input Diode Clamp Current	−50	V_I < GND	mA
I_{OK}	Output Diode Clamp Current	−50	V_O < GND	mA
I_{CC}	DC Supply Current Through V_{CC}	±100		mA
I_L	DC Supply Current Through V_L	±100		mA
I_{GND}	DC Ground Current Through Ground Pin	±100		mA
T_{STG}	Storage Temperature	−65 to +150		°C

Stresses exceeding Maximum Ratings may damage the device. Maximum Ratings are stress ratings only. Functional operation above the Recommended Operating Conditions is not implied. Extended exposure to stresses above the Recommended Operating Conditions may affect device reliability.

RECOMMENDED OPERATING CONDITIONS

Symbol	Parameter	Min	Max	Unit
V_{CC}	V_{CC} Supply Voltage	1.3	4.5	V
V_L	V_L Supply Voltage	0.9	V_{CC} − 0.4	V
V_{EN}	Enable Control Pin Voltage	GND	4.5	V
V_{IO}	Bus Input/Output Voltage I/O V_{CC} I/O V_L	GND GND	4.5 4.5	V
T_A	Operating Temperature Range	−40	+85	°C
ΔI/ΔV	Input Transition Rise or Rate V_I, V_{IO} from 30% to 70% of V_{CC}; V_{CC} = 3.3 V ± 0.3 V	0	10	ns

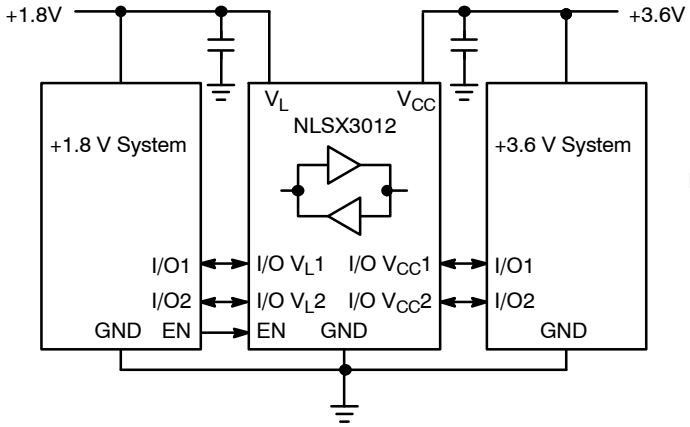

Figure 1. Typical Application Circuit

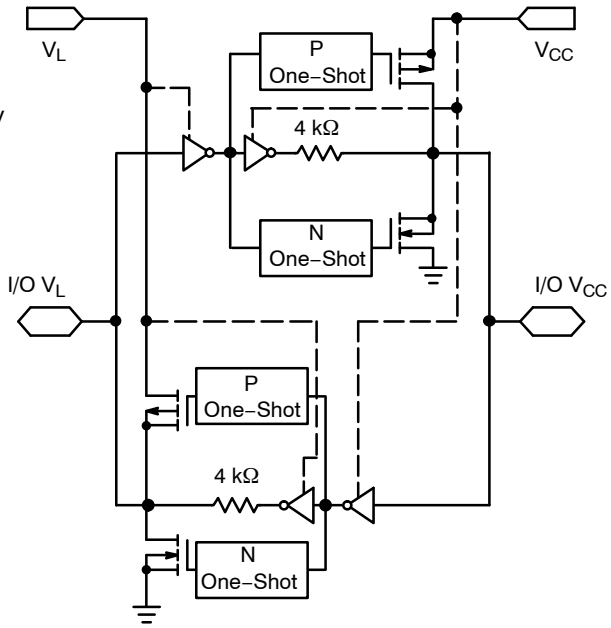

Figure 2. Simplified Functional Diagram (1 I/O Line) (EN = 1)

DC ELECTRICAL CHARACTERISTICS

Symbol	Parameter	Test Conditions (Note 1)	V_{CC} (V) (Note 2)	V_L (V) (Note 3)	−40°C to +85°C			Unit
					Min	Typ (Note 4)	Max	
V_{IHC}	I/O V_{CC} Input HIGH Voltage		1.3 to 4.5	0.9 to (V_{CC} – 0.4)	0.8 * V_{CC}	–	–	V
V_{ILC}	I/O V_{CC} Input LOW Voltage		1.3 to 4.5	0.9 to (V_{CC} – 0.4)	–	–	0.2 * V_{CC}	V
V_{IHL}	I/O V_L Input HIGH Voltage		1.3 to 4.5	0.9 to (V_{CC} – 0.4)	0.8 * V_L	–	–	V
V_{ILL}	I/O V_L Input LOW Voltage		1.3 to 4.5	0.9 to (V_{CC} – 0.4)	–	–	0.2 * V_L	V
V_{IH}	Control Pin Input HIGH Voltage	T_A = +25°C	1.3 to 4.5	0.9 to (V_{CC} – 0.4)	0.8 * V_L	–	–	V
V_{IL}	Control Pin Input LOW Voltage	T_A = +25°C	1.3 to 4.5	0.9 to (V_{CC} – 0.4)	–	–	0.2 * V_L	V
V_{OHC}	I/O V_{CC} Output HIGH Voltage	I/O V_{CC} Source Current = 20 μA	1.3 to 4.5	0.9 to (V_{CC} – 0.4)	0.8 * V_{CC}	–	–	V
V_{OLC}	I/O V_{CC} Output LOW Voltage	I/O V_{CC} Sink Current = 20 μA	1.3 to 4.5	0.9 to (V_{CC} – 0.4)	–	–	0.2 * V_{CC}	V
V_{OHL}	I/O V_L Output HIGH Voltage	I/O V_L Source Current = 20 μA	1.3 to 4.5	0.9 to (V_{CC} – 0.4)	0.8 * V_L	–	–	V
V_{OLL}	I/O V_L Output LOW Voltage	I/O V_L Sink Current = 20 μA	1.3 to 4.5	0.9 to (V_{CC} – 0.4)	–	–	0.2 * V_L	V

1. Normal test conditions are V_{EN} = 0 V, C_{IOVCC} = 15 pF and C_{IOVL} = 15 pF, unless otherwise specified.
2. V_{CC} is the supply voltage associated with the high voltage port, and V_{CC} ranges from +1.3 V to 4.5 V under normal operating conditions.
3. V_L is the supply voltage associated with the low voltage port. V_L must be less than or equal to (V_{CC} – 0.4) V during normal operation. However, during startup and shutdown conditions, V_L can be greater than (V_{CC} – 0.4) V.
4. Typical values are for V_{CC} = +2.8 V, V_L = +1.8 V and T_A = +25°C. All units are production tested at T_A = +25°C. Limits over the operating temperature range are guaranteed by design.

POWER CONSUMPTION

Symbol	Parameter	Test Conditions (Note 5)	V_{CC} (V) (Note 6)	V_L (V) (Note 7)	−40°C to +85°C			Unit
					Min	Typ	Max	
I_{Q-VCC}	Supply Current from V_{CC}	EN = V_L; I/O V_{CCn} = 0 V, I/O V_{Ln} = 0 V, I/O V_{CCn} = V_{CC} or I/O V_{Ln} = V_L and I_o = 0	1.3 to 3.6	0.9 to (V_{CC} – 0.4)	–	–	1.0	μA
I_{Q-VL}	Supply Current from V_L	EN = V_L; I/O V_{CCn} = 0 V, I/O V_{Ln} = 0 V, I/O V_{CCn} = V_{CC} or I/O V_{Ln} = V_L and I_o = 0	1.3 to 3.6	0.9 to (V_{CC} – 0.4)	–	–	1.0	μA
		EN = V_L, I/O V_{CCn} = 0 V, I/O V_{Ln} = 0 V, I/O V_{CCn} = V_{CC} or I/O V_{Ln} = (V_{CC} – 0.2 V) and I_o = 0		< (V_{CC} – 0.2)	–	–	2.0	
I_{TS-VCC}	V_{CC} Tristate Output Mode Supply Current	EN = 0 V	1.3 to 3.6	0.9 to (V_{CC} – 0.4)	–	–	1.0	μA
I_{TS-VL}	V_L Tristate Output Mode Supply Current	EN = 0 V	1.3 to 3.6	0.9 to (V_{CC} – 0.4)	–	–	0.2	μA
		EN = 0 V		V_{CC} – 0.2	–	–	2.0	
I_{OZ}	I/O Tristate Output Mode Leakage Current	EN = 0 V	1.3 to 3.6	0.9 to (V_{CC} – 0.4)	–	–	0.15	μA
		EN = 0 V		V_{CC} – 0.2	–	–	2.0	
I_{EN}	Output Enable Pin Input Current	–	1.3 to 3.6	0.9 to (V_{CC} – 0.4)	–	–	1.0	μA

5. Normal test conditions are V_{EN} = 0 V, C_{IOVCC} = 15 pF and C_{IOVL} = 15 pF, unless otherwise specified.
6. V_{CC} is the supply voltage associated with the high voltage port, and V_{CC} ranges from +1.3 V to 4.5 V under normal operating conditions.
7. V_L is the supply voltage associated with the low voltage port. V_L must be less than or equal to (V_{CC} – 0.4) V during normal operation. However, during startup and shutdown conditions, V_L can be greater than (V_{CC} – 0.4) V.
8. Typical values are for V_{CC} = +2.8 V, V_L = +1.8 V and T_A = +25°C. All units are production tested at T_A = +25°C. Limits over the operating temperature range are guaranteed by design.

TIMING CHARACTERISTICS

Symbol	Parameter	Test Conditions (Note 9)	V_{CC} (V) (Note 10)	V_L (V) (Note 11)	−40°C to +85°C			Unit
					Min	Typ (Note 12)	Max	
t_{R-VCC}	I/O V_{CC} Rise Time (Output = I/O_V_{CC})	C_{IOVCC} = 15 pF	1.3 to 4.5	0.9 to (V_{CC} − 0.4)		0.7	2.4	ns
t_{F-VCC}	I/O V_{CC} Falltime (Output = I/O_V_{CC})	C_{IOVCC} = 15 pF	1.3 to 4.5	0.9 to (V_{CC} − 0.4)		0.5	1.0	ns
t_{R-VL}	I/O V_L Risetime (Output = I/O_V_L)	C_{IOVL} = 15 pF	1.3 to 4.5	0.9 to (V_{CC} − 0.4)		1.0	3.8	ns
t_{F-VL}	I/O V_L Falltime (Output = I/O_V_L)	C_{IOVL} = 15 pF	1.3 to 4.5	0.9 to (V_{CC} − 0.4)		0.6	1.2	ns
Z_{O-VCC}	I/O V_{CC} One−Shot Output Impedance		1.3 to 4.5	0.9 to (V_{CC} − 0.4)		30		Ω
Z_{O-VL}	I/O V_L One−Shot Output Impedance		1.3 to 4.5	0.9 to (V_{CC} − 0.4)		30		Ω
t_{PD_VL-VCC}	Propagation Delay (Output = I/O_V_{CC}, t_{PHL}, t_{PLH})	C_{IOVCC} = 15 pF	1.3 to 4.5	0.9 to (V_{CC} − 0.4)		4.5	12	ns
t_{PD_VCC-VL}	Propagation Delay (Output = I/O_V_L, t_{PHL}, t_{PLH})	C_{IOVL} = 15 pF	1.3 to 4.5	0.9 to (V_{CC} − 0.4)		3.0	7.2	ns
$t_{SK\ VL-VCC}$	Channel−to−Channel Skew (Output = I/O_V_{CC})	C_{IOVCC} = 15 pF	1.3 to 4.5	0.9 to (V_{CC} − 0.4)		0.2	0.3	nS
t_{SK_VCC-VL}	Channel−to−Channel Skew (Output = I/O_V_L)	C_{IOVCC} = 15 pF	1.3 to 4.5	0.9 to (V_{CC} − 0.4)		0.2	0.3	nS
MDR	Maximum Data Rate	(Output = I/O_V_{CC}, C_{IOVCC} = 15 pF)	1.3 to 4.5	0.9 to (V_{CC} − 0.4)	110			Mb/s
		(Output = I/O_V_L, C_{IOVL} = 15 pF)	> 2.2	> 1.8	140			

9. Normal test conditions are V_{EN} = 0 V, C_{IOVCC} = 15 pF and C_{IOVL} = 15 pF, unless otherwise specified.
10. V_{CC} is the supply voltage associated with the high voltage port, and V_{CC} ranges from +1.3 V to 4.5 V under normal operating conditions.
11. V_L is the supply voltage associated with the low voltage port. V_L must be less than or equal to (V_{CC} − 0.4) V during normal operation. However, during startup and shutdown conditions, V_L can be greater than (V_{CC} − 0.4) V.
12. Typical values are for V_{CC} = +2.8 V, V_L = +1.8 V and T_A = +25°C. All units are production tested at T_A = +25°C. Limits over the operating temperature range are guaranteed by design.

ENABLE / DISABLE TIME MEASUREMENTS

Symbol	Parameter	Test Conditions (Note 13)	V_{CC} (V) (Note 14)	V_L (V) (Note 15)	−40°C to +85°C			Unit
					Min	Typ (Note 16)	Max	
t_{EN-VCC}	Turn−On Enable Time (Output = I/O_V_{CC}, t_{pZH})	C_{IOVCC} = 15 pF	1.3 to 4.5	0.9 to (V_{CC} − 0.4)		150	200	ns
	Turn−On Enable Time (Output = I/O_V_{CC}, t_{pZL})	C_{IOVL} = 15 pF	1.3 to 4.5	0.9 to (V_{CC} − 0.4)		130	180	ns
t_{EN-VL}	Turn−On Enable Time (Output = I/O_V_L, t_{pZH})	C_{IOVCC} = 15 pF	1.3 to 4.5	0.9 to (V_{CC} − 0.4)		95	225	ns
	Turn−On Enable Time (Output = I/O_V_L, t_{pZL})	C_{IOVL} = 15 pF	1.3 to 4.5	0.9 to (V_{CC} − 0.4)		75	100	ns
$t_{DIS-VCC}$	Turn−Off Disable Time (Output = I/O_V_{CC}, t_{pHZ})	C_{IOVCC} = 15 pF	1.3 to 4.5	0.9 to (V_{CC} − 0.4)		175	250	ns
	Propagation Delay (Output = I/O_V_{CC}, t_{PLZ})	C_{IOVL} = 15 pF	1.3 to 4.5	0.9 to (V_{CC} − 0.4)		140	160	ns
t_{DIS-VL}	Turn−Off Disable Time (Output = I/O_V_L, t_{pHZ})	C_{IOVCC} = 15 pF	1.3 to 4.5	0.9 to (V_{CC} − 0.4)		180	275	ns
	Propagation Delay (Output = I/O_V_L, t_{PLZ})	C_{IOVL} = 15 pF	1.3 to 4.5	0.9 to (V_{CC} − 0.4)		160	220	ns

13. Normal test conditions are V_{EN} = 0 V, C_{IOVCC} = 15 pF and C_{IOVL} = 15 pF, unless otherwise specified.
14. V_{CC} is the supply voltage associated with the high voltage port, and V_{CC} ranges from +1.3 V to 4.5 V under normal operating conditions.
15. V_L is the supply voltage associated with the low voltage port. V_L must be less than or equal to (V_{CC} − 0.4) V during normal operation. However, during startup and shutdown conditions, V_L can be greater than (V_{CC} − 0.4) V.
16. Typical values are for V_{CC} = +2.8 V, V_L = +1.8 V and T_A = +25 °C. All units are production tested at T_A = +25 °C. Limits over the operating temperature range are guaranteed by design.

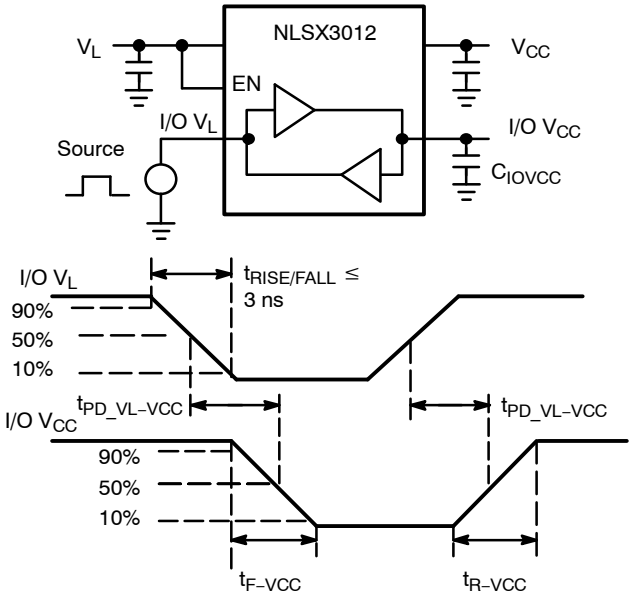

Figure 3. Driving I/O V_L Test Circuit and Timing

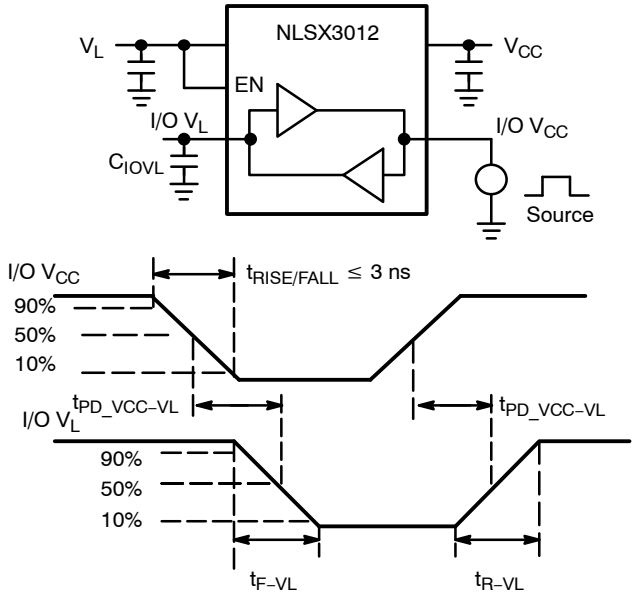

Figure 4. Driving I/O V_{CC} Test Circuit and Timing

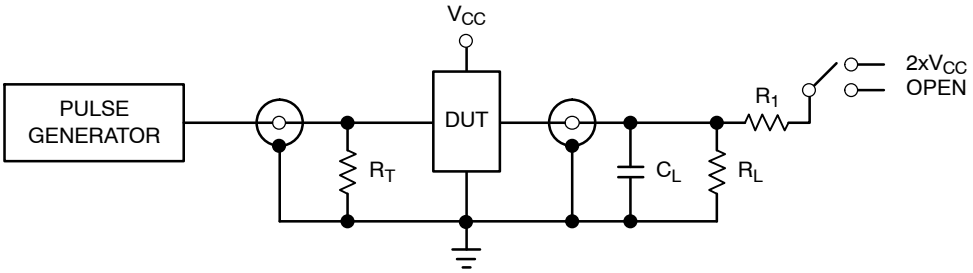

Test	Switch
t_{PZH}, t_{PHZ}	Open
t_{PZL}, t_{PLZ}	2 x V_{CC}

C_L = 15 pF or equivalent (Includes jig and probe capacitance)
R_L = R_1 = 50 kΩ or equivalent
R_T = Z_{OUT} of pulse generator (typically 50 Ω)

Figure 5. Test Circuit for Enable/Disable Time Measurement

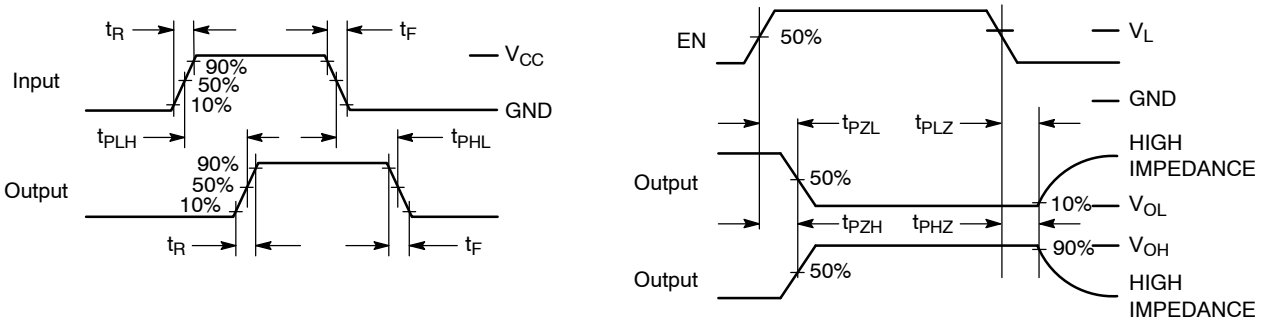

Figure 6. Timing Definitions for Propagation Delays and Enable/Disable Measurement

IMPORTANT APPLICATIONS INFORMATION

Level Translator Architecture

The NLSX3012 auto sense translator provides bi−directional voltage level shifting to transfer data in multiple supply voltage systems. This device has two supply voltages, V_L and V_{CC}, which set the logic levels on the input and output sides of the translator. When used to transfer data from the V_L to the V_{CC} ports, input signals referenced to the V_L supply are translated to output signals with a logic level matched to V_{CC}. In a similar manner, the V_{CC} to V_L translation shifts input signals with a logic level compatible to V_{CC} to an output signal matched to V_L.

The NLSX3012 consists of four bi−directional channels that independently determine the direction of the data flow without requiring a directional pin. The one−shot circuits are used to detect the rising or falling input signals. In addition, the one shots decrease the rise and fall time of the output signal for high−to−low and low−to−high transitions.

Input Driver Requirements

Auto sense translators such as the NLSX3012 have a wide bandwidth, but a relatively small DC output current rating. The high bandwidth of the bi−directional I/O circuit is used to quickly transform from an input to an output driver and vice versa. The I/O ports have a modest DC current output specification so that the output driver can be over driven when data is sent to in the opposite direction.

For proper operation, the input driver to the auto sense translator should be capable of driving 2 mA of peak output current with an output impedance less than 25 Ω. The bi−directional configuration of the translator results in both input stages being active for a very short time period. Although the peak current from the input signal circuit is relatively large, the average current is small and consistent with a standard CMOS input stage.

Output Load Requirements

The NLSX3012 is designed to drive CMOS inputs. Resistive pullup or pulldown loads of less than 50 kΩ should not be used with this device. The NLSX3373 or NLSX3378 open−drain auto sense translators are alternate translator options for an application such as the I^2C bus that requires pullup resistors.

Enable Input (EN)

The NLSX3012 has an Enable pin (EN) that provides tri−state operation at the I/O pins. Driving the Enable pin to a low logic level minimizes the power consumption of the device and drives the I/O V_{CC} and I/O V_L pins to a high impedance state. Normal translation operation occurs when the EN pin is equal to a logic high signal. The EN pin is referenced to the V_L supply and has Over−Voltage Tolerant (OVT) protection.

Uni−Directional versus Bi−Directional Translation

The NLSX3012 can function as a non−inverting uni−directional translator. One advantage of using the translator as a uni−directional device is that each I/O pin can be configured as either an input or output. The configurable input or output feature is especially useful in applications such as SPI that use multiple uni−directional I/O lines to send data to and from a device. The flexible I/O port of the auto sense translator simplifies the trace connections on the PCB.

Power Supply Guidelines

It is recommended that the V_L supply should be less than or equal to the value of the V_{CC} minus 0.4 V. The sequencing of the power supplies will not damage the device during the power up operation; however, the current consumption of the device will increase if V_L exceeds V_{CC} minus 0.4 V. In addition, the I/O V_{CC} and I/O V_L pins are in the high impedance state if either supply voltage is equal to 0 V.

For optimal performance, 0.01 to 0.1 μF decoupling capacitors should be used on the V_L and V_{CC} power supply pins. Ceramic capacitors are a good design choice to filter and bypass any noise signals on the power supply voltage lines to the ground plane of the PCB. The noise immunity will be maximized by placing the capacitors as close as possible to the supply and ground pins, along with minimizing the PCB connection traces.

PACKAGE DIMENSIONS

UDFN8 1.8 x 1.2, 0.4P
CASE 517AJ−01
ISSUE O

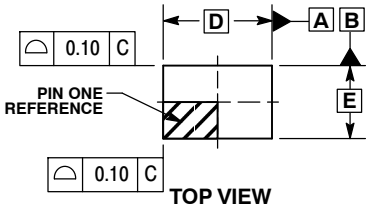

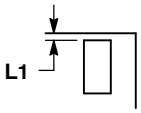

DETAIL A
NOTE 5

NOTES:
1. DIMENSIONING AND TOLERANCING PER ASME Y14.5M, 1994.
2. CONTROLLING DIMENSION: MILLIMETERS.
3. DIMENSION b APPLIES TO PLATED TERMINAL AND IS MEASURED BETWEEN 0.15 AND 0.30 mm FROM TERMINAL TIP.
4. MOLD FLASH ALLOWED ON TERMINALS ALONG EDGE OF PACKAGE. FLASH MAY NOT EXCEED 0.03 ONTO BOTTOM SURFACE OF TERMINALS.
5. DETAIL A SHOWS OPTIONAL CONSTRUCTION FOR TERMINALS.

	MILLIMETERS	
DIM	MIN	MAX
A	0.45	0.55
A1	0.00	0.05
A3	0.127 REF	
b	0.15	0.25
b2	0.30 REF	
D	1.80 BSC	
E	1.20 BSC	
e	0.40 BSC	
L	0.45	0.55
L1	0.00	0.03
L2	0.40 REF	

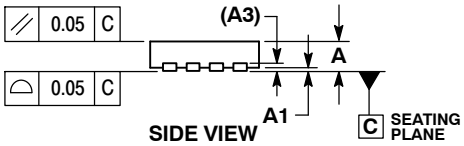

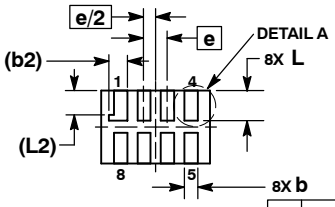

⊕	0.10 Ⓜ	C	A B
	0.05 Ⓜ	C	NOTE 3

MOUNTING FOOTPRINT SOLDERMASK DEFINED*

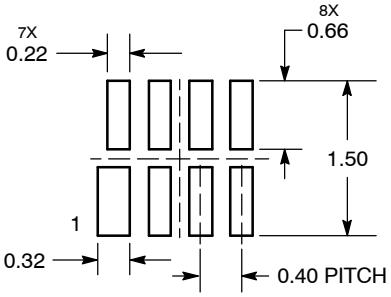

DIMENSIONS: MILLIMETERS

*For additional information on our Pb−Free strategy and soldering details, please download the ON Semiconductor Soldering and Mounting Techniques Reference Manual, SOLDERRM/D.

PACKAGE DIMENSIONS

SOIC−8 NB
CASE 751−07
ISSUE AK

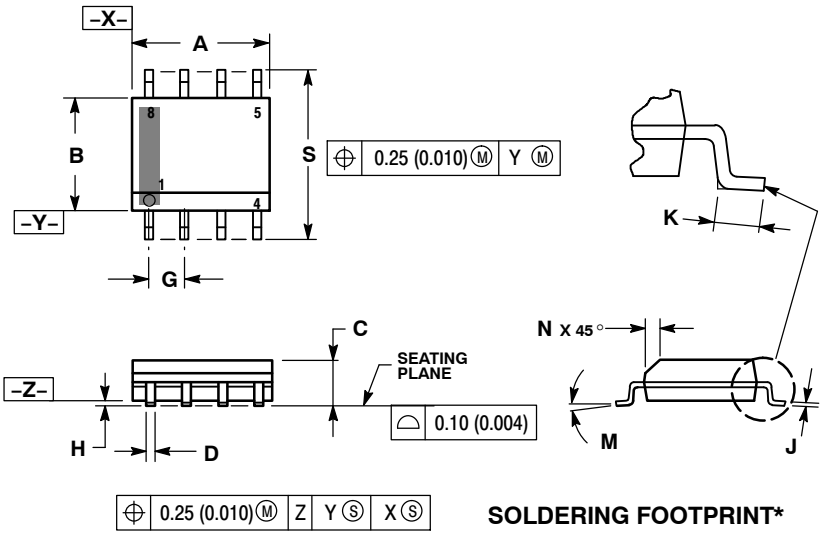

NOTES:
1. DIMENSIONING AND TOLERANCING PER ANSI Y14.5M, 1982.
2. CONTROLLING DIMENSION: MILLIMETER.
3. DIMENSION A AND B DO NOT INCLUDE MOLD PROTRUSION.
4. MAXIMUM MOLD PROTRUSION 0.15 (0.006) PER SIDE.
5. DIMENSION D DOES NOT INCLUDE DAMBAR PROTRUSION. ALLOWABLE DAMBAR PROTRUSION SHALL BE 0.127 (0.005) TOTAL IN EXCESS OF THE D DIMENSION AT MAXIMUM MATERIAL CONDITION.
6. 751−01 THRU 751−06 ARE OBSOLETE. NEW STANDARD IS 751−07.

	MILLIMETERS		INCHES	
DIM	MIN	MAX	MIN	MAX
A	4.80	5.00	0.189	0.197
B	3.80	4.00	0.150	0.157
C	1.35	1.75	0.053	0.069
D	0.33	0.51	0.013	0.020
G	1.27 BSC		0.050 BSC	
H	0.10	0.25	0.004	0.010
J	0.19	0.25	0.007	0.010
K	0.40	1.27	0.016	0.050
M	0 °	8 °	0 °	8 °
N	0.25	0.50	0.010	0.020
S	5.80	6.20	0.228	0.244

SOLDERING FOOTPRINT*

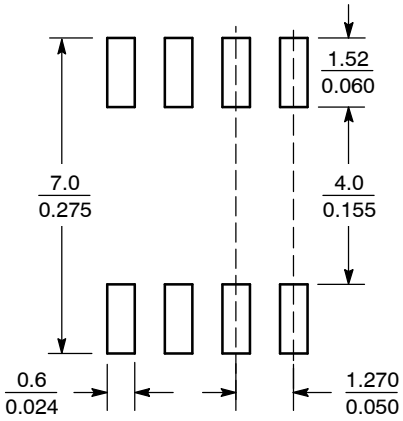

SCALE 6:1 (mm / inches)

*For additional information on our Pb−Free strategy and soldering details, please download the ON Semiconductor Soldering and Mounting Techniques Reference Manual, SOLDERRM/D.

PACKAGE DIMENSIONS

Micro8™
CASE 846A−02
ISSUE H

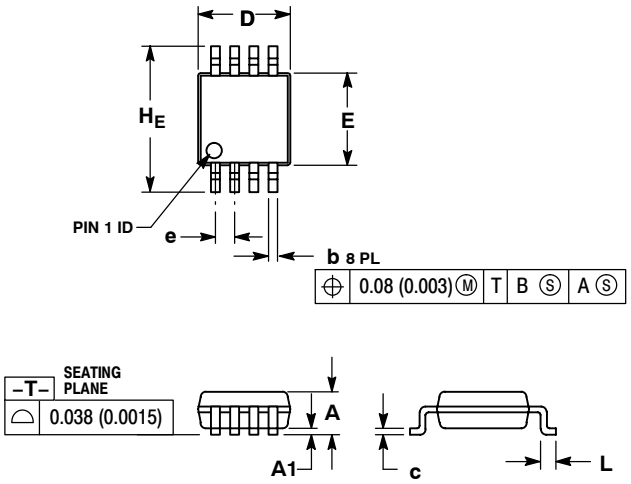

NOTES:
1. DIMENSIONING AND TOLERANCING PER ANSI Y14.5M, 1982.
2. CONTROLLING DIMENSION: MILLIMETER.
3. DIMENSION A DOES NOT INCLUDE MOLD FLASH, PROTRUSIONS OR GATE BURRS. MOLD FLASH, PROTRUSIONS OR GATE BURRS SHALL NOT EXCEED 0.15 (0.006) PER SIDE.
4. DIMENSION B DOES NOT INCLUDE INTERLEAD FLASH OR PROTRUSION. INTERLEAD FLASH OR PROTRUSION SHALL NOT EXCEED 0.25 (0.010) PER SIDE.
5. 846A−01 OBSOLETE, NEW STANDARD 846A−02.

	MILLIMETERS			INCHES		
DIM	MIN	NOM	MAX	MIN	NOM	MAX
A	−−	−−	1.10	−−	−−	0.043
A1	0.05	0.08	0.15	0.002	0.003	0.006
b	0.25	0.33	0.40	0.010	0.013	0.016
c	0.13	0.18	0.23	0.005	0.007	0.009
D	2.90	3.00	3.10	0.114	0.118	0.122
E	2.90	3.00	3.10	0.114	0.118	0.122
e	0.65 BSC			0.026 BSC		
L	0.40	0.55	0.70	0.016	0.021	0.028
H_E	4.75	4.90	5.05	0.187	0.193	0.199

SOLDERING FOOTPRINT*

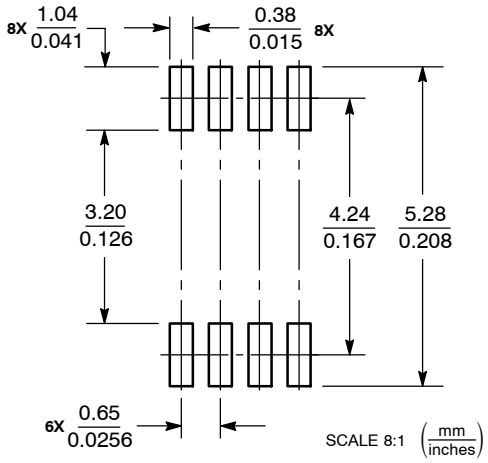

*For additional information on our Pb−Free strategy and soldering details, please download the ON Semiconductor Soldering and Mounting Techniques Reference Manual, SOLDERRM/D.

ON Semiconductor and ON are registered trademarks of Semiconductor Components Industries, LLC (SCILLC). SCILLC reserves the right to make changes without further notice to any products herein. SCILLC makes no warranty, representation or guarantee regarding the suitability of its products for any particular purpose, nor does SCILLC assume any liability arising out of the application or use of any product or circuit, and specifically disclaims any and all liability, including without limitation special, consequential or incidental damages. "Typical" parameters which may be provided in SCILLC data sheets and/or specifications can and do vary in different applications and actual performance may vary over time. All operating parameters, including "Typicals" must be validated for each customer application by customer's technical experts. SCILLC does not convey any license under its patent rights nor the rights of others. SCILLC products are not designed, intended, or authorized for use as components in systems intended for surgical implant into the body, or other applications intended to support or sustain life, or for any other application in which the failure of the SCILLC product could create a situation where personal injury or death may occur. Should Buyer purchase or use SCILLC products for any such unintended or unauthorized application, Buyer shall indemnify and hold SCILLC and its officers, employees, subsidiaries, affiliates, and distributors harmless against all claims, costs, damages, and expenses, and reasonable attorney fees arising out of, directly or indirectly, any claim of personal injury or death associated with such unintended or unauthorized use, even if such claim alleges that SCILLC was negligent regarding the design or manufacture of the part. SCILLC is an Equal Opportunity/Affirmative Action Employer. This literature is subject to all applicable copyright laws and is not for resale in any manner.

PUBLICATION ORDERING INFORMATION

LITERATURE FULFILLMENT:
Literature Distribution Center for ON Semiconductor
P.O. Box 5163, Denver, Colorado 80217 USA
Phone: 303−675−2175 or 800−344−3860 Toll Free USA/Canada
Fax: 303−675−2176 or 800−344−3867 Toll Free USA/Canada
Email: orderlit@onsemi.com

N. American Technical Support: 800−282−9855 Toll Free USA/Canada
Europe, Middle East and Africa Technical Support:
Phone: 421 33 790 2910
Japan Customer Focus Center
Phone: 81−3−5773−3850

ON Semiconductor Website: **www.onsemi.com**

Order Literature: http://www.onsemi.com/orderlit

For additional information, please contact your loca
Sales Representative