ROHS

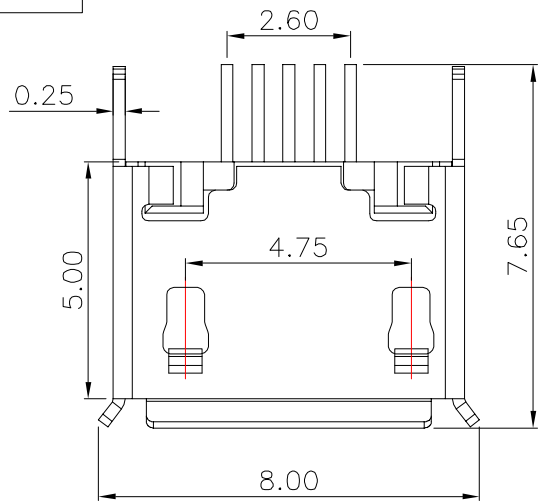

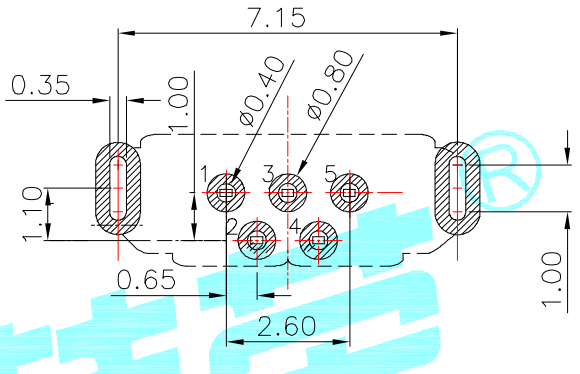

Recommended PCB Layout

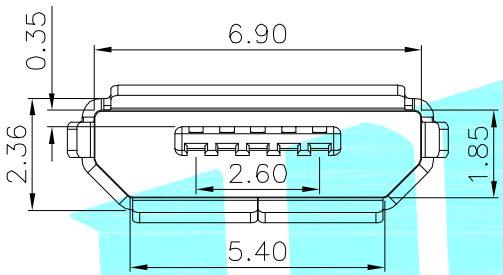

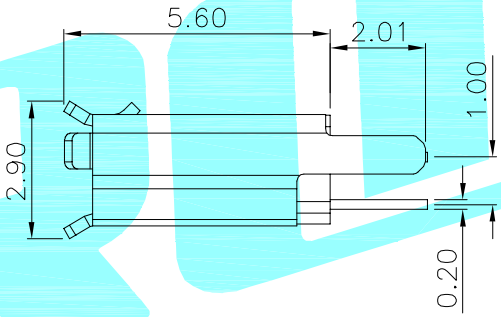

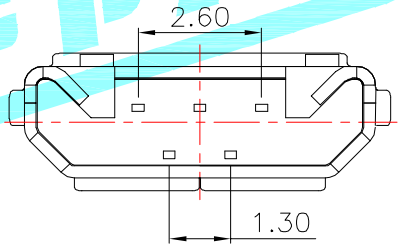

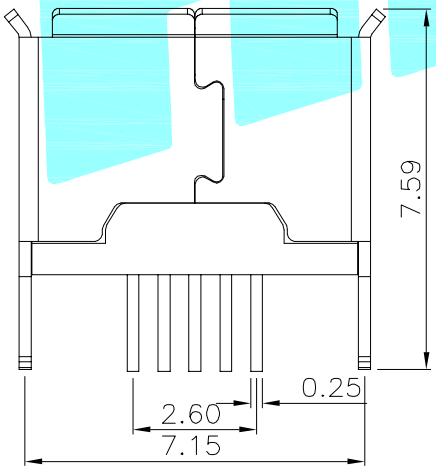

SPECIFICATIONS

1.RATING: DC30V 1.0A
2.MECHANICAL LIFE: 5,000 CYCLES.

ITEM	PART NAME	TER'NO.	QTY.	MATERIAL	FINISHING	REMARK
③	Shell	——	1	SUS	Sn Plated	——
②	Contact	——	5	Phosphor Bronze	Au Plated	——
①	Housing	——	1	LCP	Black	——

APPROVALS		DATE	HRO韩荣® ELECTRONICS CO.,LTD	
DRAWN	Coco.LI	2014/9/29		
CHECKED			TITLE:	USB CONNECTOR
APPROVALS			PART NO.	U-D-M5DD-Y-2
TOLERANCES ARE	30~以上 ±0.30 / 10~30 ±0.25 / 5~10 ±0.20 / ~ 5 ±0.15	ANGLE ±2°	UNIT: mm	SCALE: 1:1 / PROJ:
			DRAWING NO.	—— / SHEET 1 OF 1

ECN NO.	REV.	DATE.	DESCRIPTION.	CHANGE.	CHECK.	APPRO.
——	A	——	NEW	——	——	——