isc N-Channel MOSFET Transistor ISC60NM60L

FEATURES

- Drain Current : I_D= 60A@ T_C=25℃
- Drain Source Voltage
  : V_{DSS}= 600V(Min)
- Static Drain-Source On-Resistance
  : $R_{DS(on)}$ = 65mΩ (Max) @V_{GS}=10V
- 100% avalanche tested
- Minimum Lot-to-Lot variations for robust device performance and reliable operation

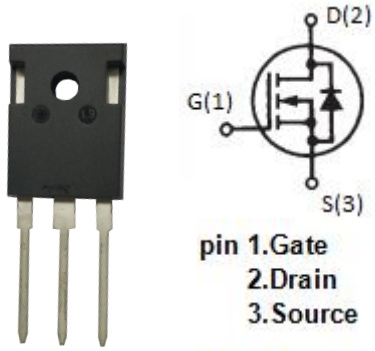

DESCRIPTION

- motor drive, DC-DC converter, power switch and solenoid drive.

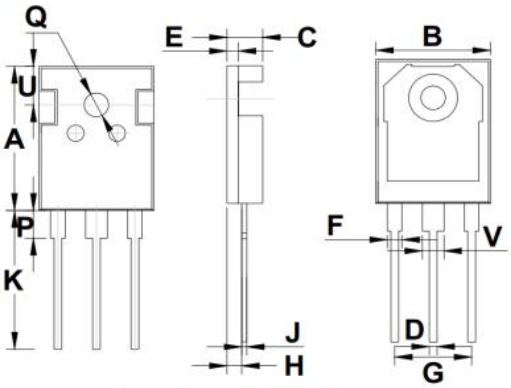

DIM	MM MIN	MM MAX
A	19.80	20.20
B	15.40	15.80
C	4.90	5.10
D	0.90	1.10
E	1.40	1.60
F	1.90	2.10
G	10.80	11.00
H	2.40	2.60
J	0.50	0.70
K	19.50	20.50
P	3.90	4.10
Q	3.30	3.50
U	5.20	5.40
V	2.90	3.10

ABSOLUTE MAXIMUM RATINGS(T_a=25℃)

SYMBOL	PARAMETER	VALUE	UNIT
V_{DSS}	Drain-Source Voltage	600	V
V_{GS}	Gate-Source Voltage-Continuous	±30	V
I_D	Drain Current-Continuous	60	A
I_{DM}	Drain Current-Single Pluse	180	A
P_D	Total Dissipation @T_C=25℃	320	W
T_J	Max. Operating Junction Temperature	-55~150	℃
T_{stg}	Storage Temperature	-55~150	℃

THERMAL CHARACTERISTICS

SYMBOL	PARAMETER	MAX	UNIT
$R_{th\ j\text{-}c}$	Thermal Resistance, Junction to Case	0.39	℃/W

Download from alldatasheet.com

ELECTRICAL CHARACTERISTICS

T_C=25℃ unless otherwise specified

SYMBOL	PARAMETER	CONDITIONS	MIN	MAX	UNIT
$V_{(BR)DSS}$	Drain-Source Breakdown Voltage	V_{GS}= 0; I_D= 0.25mA	600	--	V
$V_{GS(th)}$	Gate Threshold Voltage	V_{DS}= 10V; I_D= 0.25mA	2.5	4.5	V
$R_{DS(on)}$	Drain-Source On-Resistance	V_{GS}= 10V; I_D= 30A	--	65	mΩ
I_{GSS}	Gate-Body Leakage Current	V_{GS}= ±30V;V_{DS}= 0	--	±0.1	uA
I_{DSS}	Zero Gate Voltage Drain Current	V_{DS}= 600V; V_{GS}= 0	--	50	uA
V_{SD}	Forward On-Voltage	I_S= 60A; V_{GS}= 0	--	1.4	V

NOTICE：

ISC reserves the rights to make changes of the content herein the datasheet at any time without notification. The information contained herein is presented only as a guide for the applications of our products.

ISC products are intended for usage in general electronic equipment. The products are not designed for use in equipment which require specialized quality and/or reliability, or in equipment which could have applications in hazardous environments, aerospace industry, or medical field. Please contact us if you intend our products to be used in these special applications.

ISC makes no warranty or guarantee regarding the suitability of its products for any particular purpose, nor does ISC assume any liability arising from the application or use of any products, and specifically disclaims any and all liability, including without limitation special, consequential or incidental damages.

Download from alldatasheet.com