LED driver series for LCD back light

White LED driver for medium sized and large sized LCD back light

BD9470AEFV・BD9470AFM

●General Description

BD9470AEFV and BD9470AFM are high efficiency driver for white LED. They are designed for large sized LCD. BD9470AEFV and BD9470AFM are built-in DCDC converter that supply appropriate voltage for light source.
BD9470AEFV and BD9470AFM are also built-in protection function for abnormal state such as OVP: over voltage protection, OCP: over current limit protection of DCDC, SCP: short circuit protection, open detection of LED string.
Thus they are used for conditions of large output voltage and load conditions.

●Features

- 6ch LED constant current driver
- LED maximum output current 250mA
- Individual PWM dimming modulation allowed for LEDs
- ±2% LED current accuracy (when each LED is set to 130mA)
- Built-in LED feedback voltage automatic adjustment circuit according to LED current
- Built-in start-up circuit independent of PWM light modulation
- built-in VOUT・FB voltage maintenance function when PWM=Low（0%）
- Built-in LED current stabilization circuit while scanning operation is performed
- Built-in VOUT discharge circuit while shutdown
- Built-in LED protection (OPEN / SHORT protection)
- Individual detection and individual LED OFF for both open and short circuit
- Adjustable LED short-circuit protection threshold
- PWM-independent LED protection
- VOUT over voltage protection (OVP) and reduced voltage protection (SCP) circuit
- Built-in failure indication function
- Built-in ISET pin short-circuit protection circuit

●Typical Application Circuit

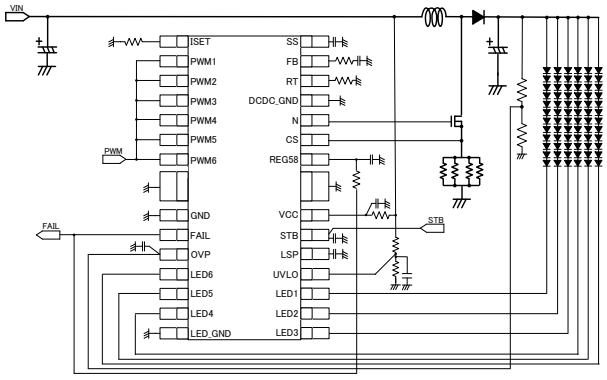

Figure 3. Typical Application Circuit

●Key Specifications

- VCC supply Voltage range: 9.0V～35.0V
- LED minimum output current: 40mA
- LED maximum output current: 250mA
- DCDC oscillation frequency: 150KHz(RT=100Kohm)
- Operation circuit current: 6mA(typ.)
- Operating temperature range: -40℃～85℃

●Applications

- LED driver for TV, monitor and LCD back light

●Package

	W (Typ.) x D(Typ.) x H(Max.)
HSOP-M28	18.50mm x 9.90mm x 2.41mm
HTSSOP-B28	9.70mm x 6.40mm x 1.00mm

Figure 1. HSOP-M28

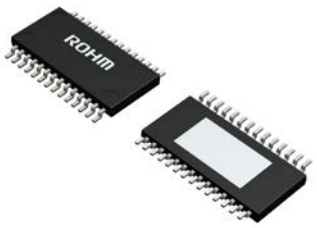

Figure 2. HTSSOP-B28

○Product structure：Silicon monolithic integrated circuit ○This product is not designed protection against radioactive rays

© 2013 ROHM Co., Ltd. All rights reserved.

1. Specification for BD9470AEFV・BD9470AFM

●Absolute Maximum Ratings (Ta=25°C)

Parameter	Symbol	**Rating**	unit
OVP Detect Voltage (DCDC Stop)	VCC	-0.3~36	V
LED1~6 pin voltage	LED1~6	-0.3~40	V
STB・FAIL・UVLO・OVP pin voltage	STB,FAIL,UVLO,OVP	-0.3~36	V
ISET・FB・SS・ CS・N・REG58・RT pin voltage	ISET・FB・SS・CS・N・REG58・RT	-0.3~7	V
PWM1~6・LSP	PWM1~6・LSP	-0.3~16	
Power dissipation (HSOP-M28)*1	Pd	5208	mW
Power dissipation (HTSSOP-B28)*2	Pd	4700	mW
Operating temperature range	Topr	-40～+85	℃
Storage temperature range	Tstg	-55～+150	℃
Maximum junction temperature	Tjmax	+150	℃

*1 Decreases -41.7mW/°C at Ta=25°C or higher (When mounting a four-layer 70.0mmx70.0mmx1.6mm board)
*2 Decreases -37.6mW/°C at Ta=25°C or higher (When mounting a four-layer 70.0mmx70.0mmx1.6mm board)

●Recommended Operating Ratings

Parameter	Symbol	Rating	unit
Supply voltage	VCC	9.0 ～ 35.0	V
LED1-4 pin minimum output current	ILED_MIN	40	mA*1
LED1-4 pin maximum output current	ILED_MAX	250	mA*1*2*3
LSP input voltage range	VLSP	0.3～2.5	V
DC/DC oscillation frequency	fsw	100 ～ 500	kHz
Min. on-duty for PWM light modulation	PWM_MIN	30	μS

*1 The amount of current per channel

*2 If LED makes significant variations in its reference voltage Vf, the driver will increase power dissipation, resulting in a rise in package temperature. To avoid this problem, design the board with thorough consideration given to heat radiation measures.

*3 The LED current can be set up to 250mA

● Pin Configuration (TOP VIEW)

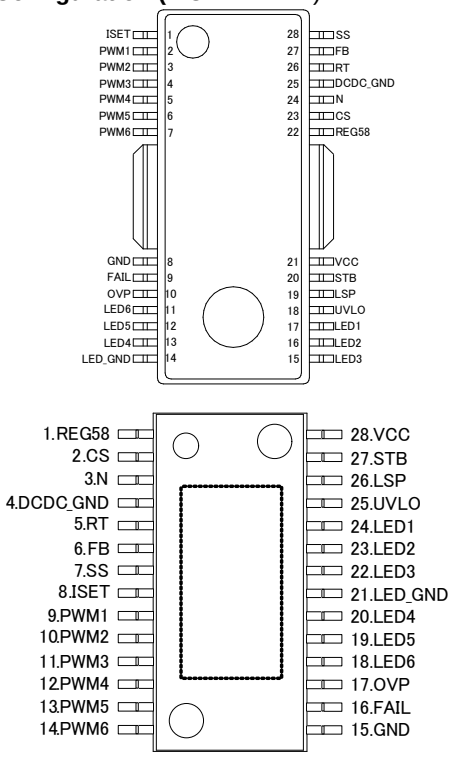

Figure 4. Pin Configuration（TOP VIEW）

●Outline Dimension Diagrams/Sign Diagrams

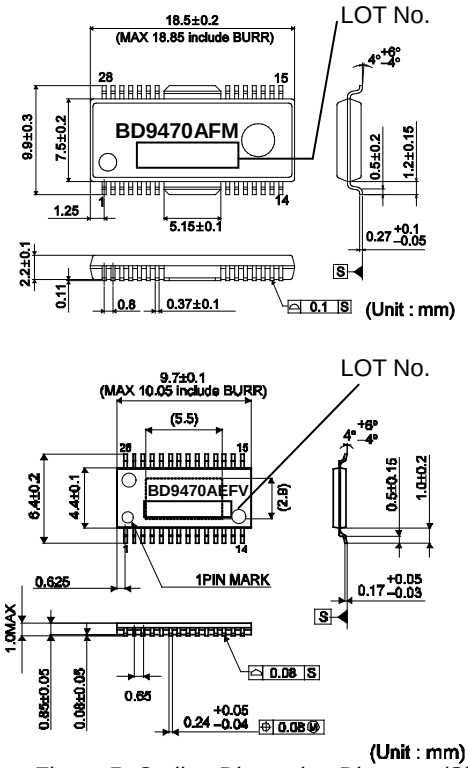

Figure 5. Outline Dimension Diagrams/Sign Diagrams

© 2013 ROHM Co., Ltd. All rights reserved.

Contents

1. Specification for BD9470AEFV・BD9470AFM P2～P9
- ●Absolute Maximum Ratings P2
- ●Recommended Operating Ratings P2
- ●Pin Configuration P2
- ●Outline Dimension Diagrams/Sign Diagrams P2
- ●Electrical Characteristics P4,P5
- ●Pin Numbers, Names, and Functions P6
- ●External Component Recommended Range P6
- ●Internal Equivalent Circuit Diagrams P7
- ●Block Diagram P8
- ●Characteristic date P8,P9

2. Understanding BD9470AEFV・BD9470AFM P10～P12
- ●Pin Functions P10～P12

3. Application of BD9470AEFV・BD9470AFM P13～P32

3.1 BD9470AEFV, BD9470AFM examination for application P13～P27
- ●Start-up and SS capacity setting explanation P13,P14
- ●The setting of REG58 capacity and shutdown procedure P15
- ●VCC series resistance setting procedure P16
- ●The necessity for holding output voltage and FB voltage while PWM=Low P17,P18
- ●Explanation of VOUT（OVP） voltage holding function when PWM=Low P19,P20
- ●FB current Source mode・Sink/Source mode P21,P22
- ●LED Current setting P23
- ●DC/DC converter drive frequency setting P23
- ●UVLO setting procedure P24
- ●OVP/SCP setting method P25
- ●LSP setting procedure P26
- ●Timer latch function P27

3.2 Selection of DCDC components P28～P30
- ●OCP setting procedure/DCDC component current tolerance selection procedure P28,P29
- ●Selection of Inductor L P30
- ●Selection of switching MOSFET transistors P30
- ●Selection of rectifier diodes P30

3.3 Timing chart P31

3.4 List of protection function P32

4. Caution on use P33

5. Ordering Information P34

6. Revision history P35

© 2013 ROHM Co., Ltd. All rights reserved.

●**Electrical Characteristics (unless otherwise specified, Ta = 25°C, VCC=24V)**

Parameter	Symbol	Specification			unit	Condition
		Min	Typ	Max		
【Whole Device】						
Operation Circuit	Icc	—	5.5	8.5	mA	STB=3V, PWM1-6=3.3V
Standby current	IST	—	40	80	μA	STB=0V
【UVLO Block】						
Operating voltage (VCC)	VUVLO_VCC	6.5	7.5	8.5	V	VCC=SWEEP UP
Hysteresis voltage（VCC）	VUHYS_VCC	150	300	600	mV	VCC=SWEEP DOWN
UVLO release voltage	VUVLO_U	2.88	3.00	3.12	V	VUVLO=SWEEP UP
UVLO hysteresis voltage	VUHYS_U	250	300	350	mV	VUVLO=SWEEP DOWN
UVLO pin leakage current	UVLO_LK	-2	0	2	μA	VUVLO=4V
【DC/DC Block】						
Error amp. Reference voltage (Min)	VLED	0.36	0.40	0.44	V	LEDx Terminal ILEDx = 40mA
Error amp. basic voltage (ILED=130mA)	VLED	0.428	0.450	0.472	V	LEDx Terminal ILEDx = 130mA
Oscillation frequency	FCT	142.5	150	157. 5	KHz	RT=100kohm
Max. duty cycle of output N	NMAX_DUTY	90	95	99	%	RT=100kohm
RT short protection range	RT_DET	-0.3	-	VRT×90%	V	RT=SWEEP DOWN
On resistance on N pin source side	RONSO	1.5	3	6	Ω	
On resistance on N pin sink side	RONSI	1.5	3	6	Ω	
RT pin voltage	VRT	1	1.5	2	V	RT=100kohm
SS pin source current	ISSSO	-2.6	-2.0	-1.4	μA	VSS=2V
Soft start completion voltage	VSS_END	3.52	3.70	3.88	V	SS=SWEEP UP
FB source current	IFBSO	-115	-100	-85	μA	VLED=0V, VFB=1.0V
FB sink current	IFBSI	70	100	130	μA	VLED=5.0V(ALL_CH), VFB=1.0V,VSS=4V
FB source mode SS pin input voltage range	FB_SO_SS	4.9	-	-	V	SS=SWEEP UP
FB sink/source mode SS pin input voltage range	FB_SOSI_SS	3.9	-	4.4	V	SS=SWEEP DOWN
Over current detect voltage	VCS	372	400	428	mV	CS=SWEEP UP
CS source current	ICS	15	30	60	μA	VCS=0V
【DC/DC protection Block】						
OVP Detect Voltage (DCDC Stop)	VOVP	2.90	3.00	3.10	V	VOVP SWEEP UP
OVP protection timer release	VOVP_CAN	VOVP-0.14	VOVP-0.1	VOVP-0.04	V	VOVP SWEEP DOWN
Short protection detect voltage	VSCP	0.05	0.1	0.15	V	VOVP SWEEP DOWN
OVP pin leakage current	OVP_LK	-2	0	2	μA	VOVP=4V

© 2013 ROHM Co., Ltd. All rights reserved.

●**Electrical Characteristics (unless otherwise specified, Ta = 25°C, VCC=24V)**

Parameter	Symbol	Specification			unit	Condition
		Min	Typ	Max		
【LED Driver Block】						
LEDx pin current accuracy1	⊿ILED1	-2	-	2	%	ILED=130mA
LEDx pin current accuracy2	⊿ILED2	-2.5	-	2.5	%	ILED=150mA
LEDx pin leakage current	⊿ILED3	-3.5		3.5	%	ILED=250mA
ISET pin voltage	ILLED	-0.8	-	0.8	uA	STB=H, PWMx=L, LEDx=40V
LEDx pin current accuracy1	VISET	1.3	1.5	1.7	V	RISET=30kΩ
【LED protection Block】						
ISET short circuit protection range	ISET_DET	-0.3	-	VISET×90%	V	ISET=SWEEP DOWN
LEDxSHORT protection voltage	VLSP	8.5	9	9.5	V	LEDx=SWEEPUP, LSP=OPEN
LSP pin resistive divider(Higher R)	RULSP	1860	3100	5580	kΩ	LSP=0V
LSP pin resistive divider(Lower R)	RDLSP	540	900	1620	kΩ	LSP=4V
LEDx OPEN detect voltage	VOPEN	0.15	0.20	0.25	V	LEDx=SWEEP DOWN
【REG58 BLock】						
REG58 output voltage 1	REG58_1	5.742	5.8	5.858	V	IO=0mA
REG58 output voltage 2	REG58_2	5.713	5.8	5.887	V	IO=-15mA
REG58 max output current	| IREG58 |	15	ー	-	mA	
REG58_UVLOdetect voltage	REG58_TH	2.1	2.4	2.7	V	STB=ON REG58=SWEEP DOWN
REG58_UVLO Hysteresis	REG58_HYS	100	200	400	mV	STB=ON->OFF REG58=SWEEP DOWN
REG58 Discharge current	REG58_DIS	3.0	5.0	7.0	uA	STB=ON->OFF REG58=4V
【STB Block】						
STB pin HIGH voltage	STBH	2	-	35	V	STB=SWEEP UP
STB pin LOW voltage	STBL	-0.3	-	0.8	V	STB=SWEEP DOWN
STB pin Pull Down resistance	RSTB	600	1000	1800	kΩ	VSTB=3.0V
【PWM Block】						
PWMx pin HIGH voltage	PWM_H	1.5	-	15	V	PWM x =SWEEP UP
PWMx pin LOW voltage	PWM_L	-0.3	-	0.8	V	PWM x =SWEEP DOWN
PWMx pin Pull Down resistance	RPWM	1200	2000	3600	kΩ	PWM x =3.0V
【FAIL Block（OPEN DRAIN）】						
FAIL Pin Ron	RFAIL	250	500	1000	Ω	VFAIL=1.0V
FAIL Pin Leakage current	ILFAIL	-2	0	2	μA	VFAIL=5V

© 2013 ROHM Co., Ltd. All rights reserved.

●**Pin Numbers/Names/Functions**

Pin No. HSOP-M28	Pin Name HTSSOP-B28	Symbol	Function
1	8	ISET	LED current setting resistor connection pin
2	9	PWM1	PWM light modulation signal input pin for LED1
3	10	PWM2	PWM light modulation signal input pin for LED2
4	11	PWM3	PWM light modulation signal input pin for LED3
5	12	PWM4	PWM light modulation signal input pin for LED4
6	13	PWM5	PWM light modulation signal input pin for LED5
7	14	PWM6	PWM light modulation signal input pin for LED6
8	15	GND	Ground pin for analog block
9	16	FAIL	Error detection output pin
10	17	OVP	Overvoltage protection detection pin
11	18	LED6	LED output 6
12	19	LED5	LED output 5
13	20	LED4	LED output 4
14	21	LED_GND	Ground pin for LED
15	22	LED3	LED output 3
16	23	LED2	LED output 2
17	24	LED1	LED output 1
18	25	UVLO	Detection pin for Under voltage Lockout prevention
19	26	LSP	LED short-circuit protection voltage setting pin
20	27	STB	Enable pin
21	28	VCC	Power supply pin
22	1	REG58	5.8V regulator output pin / Shutdown timer pin
23	2	CS	DC/DC output current detection pin OCP detection pin
24	3	N	DC/DC switching output pin
25	4	DCDC_GND	DC/DC GND pin
26	5	RT	DCDC Drive frequency setting connection pin
27	6	FB	Error Amp output pin
28	7	SS	Slow start/ LED protection masking time setting pin

●**External Component Recommended Range**

Parameter	Symbol	Specification	unit
VCC pin connecting capacity	CVCC	0.1 ～ 100	μF
VCC pin connecting resistance	RVCC	0 ～ *1	kΩ
REG58 pin connecting capacity	C_REG	1.0～470	μF
Soft start setting capacity	CSS	0.001～1.0	μF
RT pin connection resistance range	RRT	30～150	kΩ
ISET pin connecting resistance range	RISET	12.16～75	kΩ

The operating conditions listed above are constants for the IC alone. To make constant setting with practical set devices, utmost attention should be paid.
*1 Please refer to【3.2 function explanatiob and selection of external components for thes election of VCC series resistance.

© 2013 ROHM Co., Ltd. All rights reserved.

●**Internal Equivalent Circuit Diagrams**

REG58 / N / CS / DCDC_GND	SS	FB
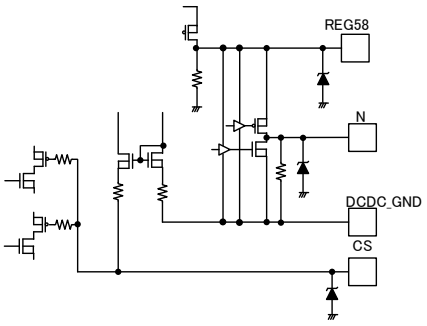	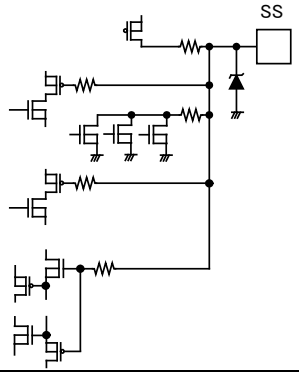	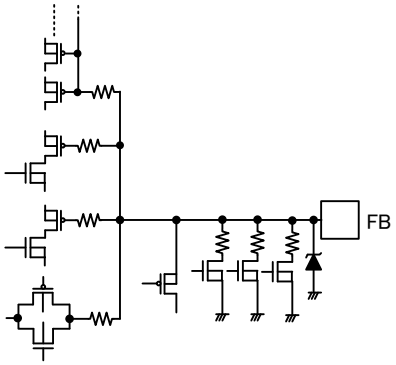
OVP	**ISET**	**RT**
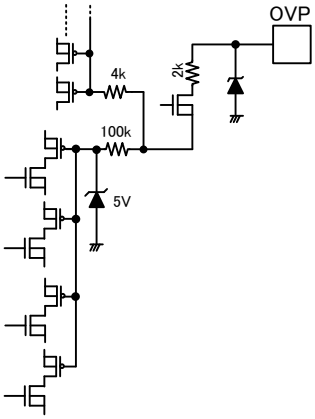	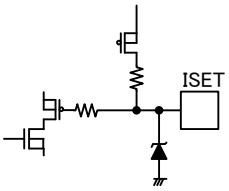	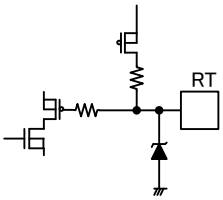
STB	**FAIL**	**UVLO**
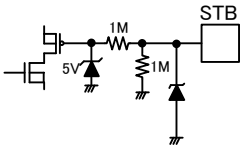	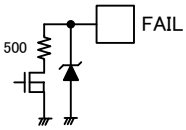	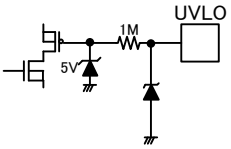
LED1-6/LED_GND	**PWM**	**LSP**
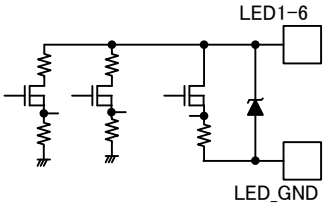	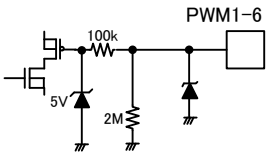	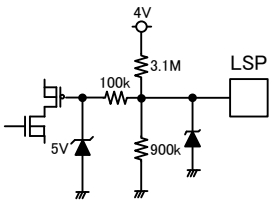

Figure 6. Internal Equivalent Circuit Diagrams

© 2013 ROHM Co., Ltd. All rights reserved.

● **Block Diagram**

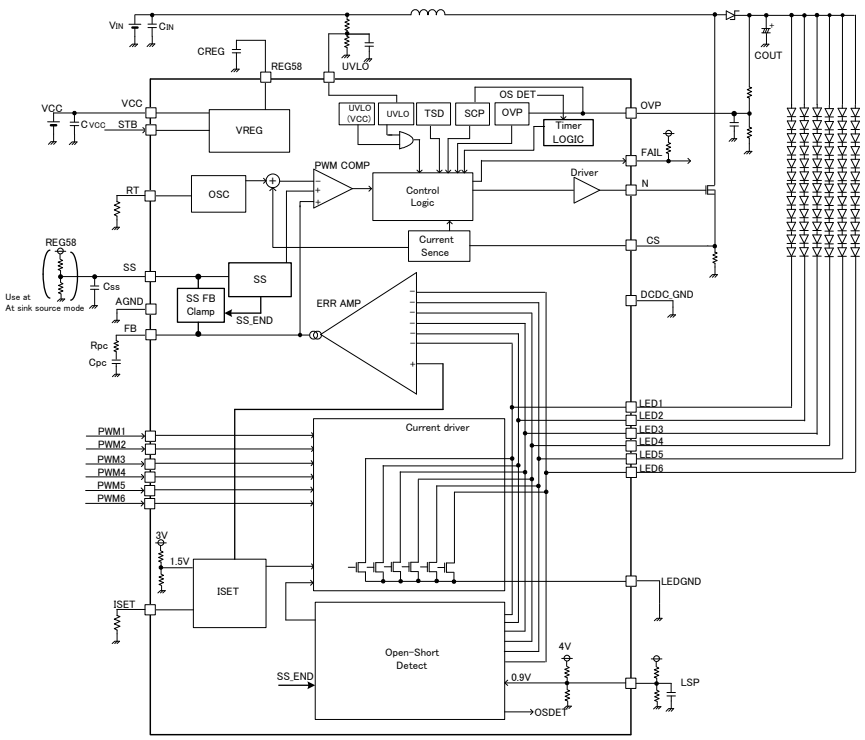

Figure 7. Block Diagram

●**Characteristic date(reference date)**

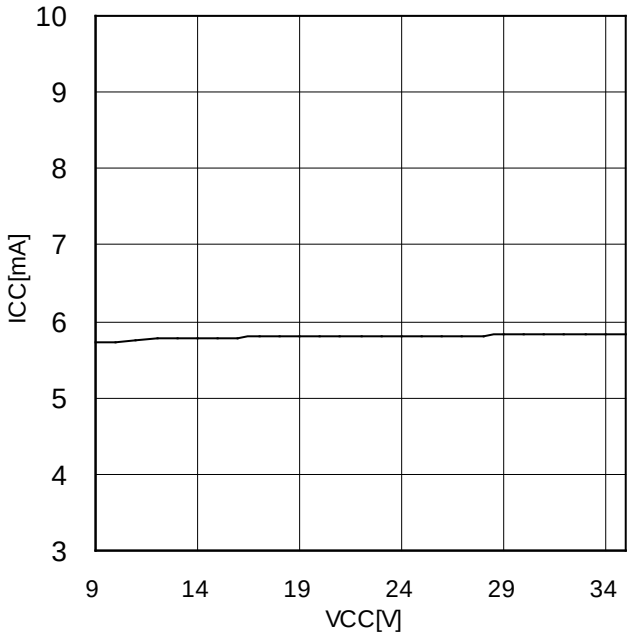

Figure 8. ICC[mA] vs VCC[V]

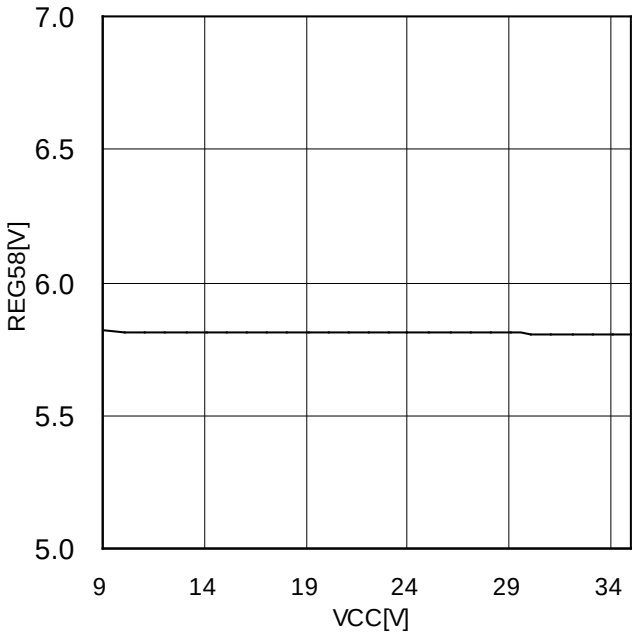

Figure 9. REG58[V] vs VCC[V]

© 2013 ROHM Co., Ltd. All rights reserved.

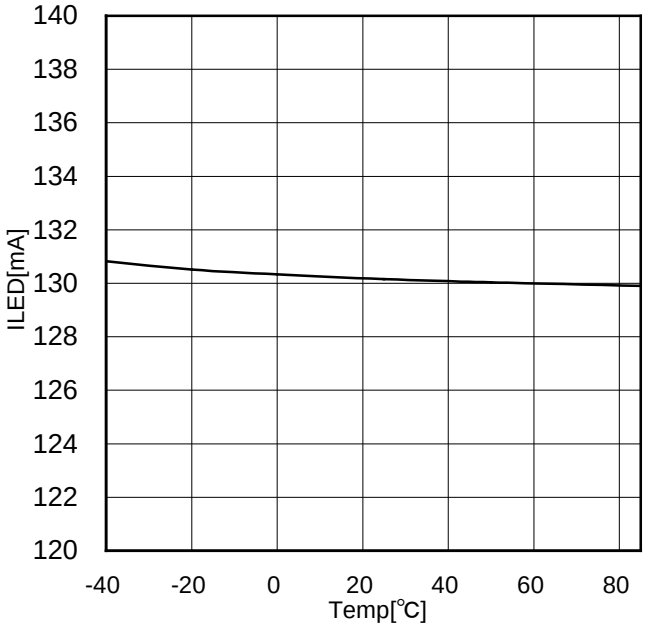

Figure 10. ILED[mA] vs Temp[℃]

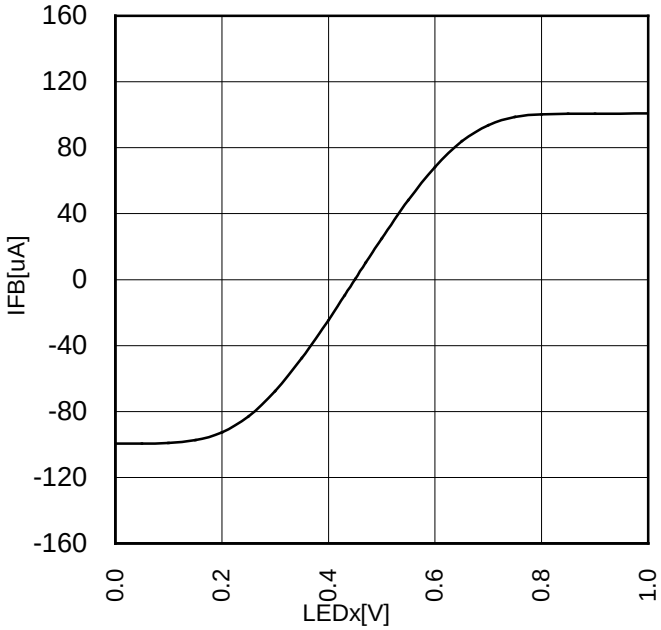

Figure 11. IFB[uA] vs LEDx[V]
(@ILED=130mA)

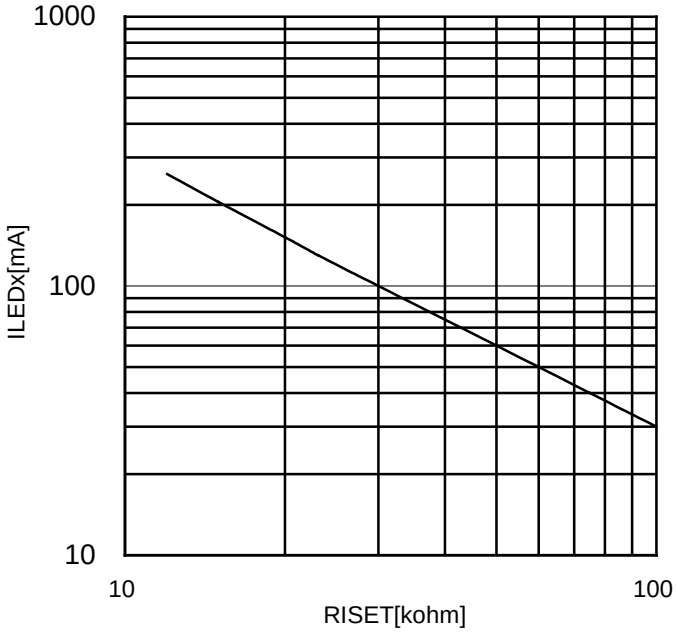

Figure 12. ILEDx[mA] vs RISET[kohm]

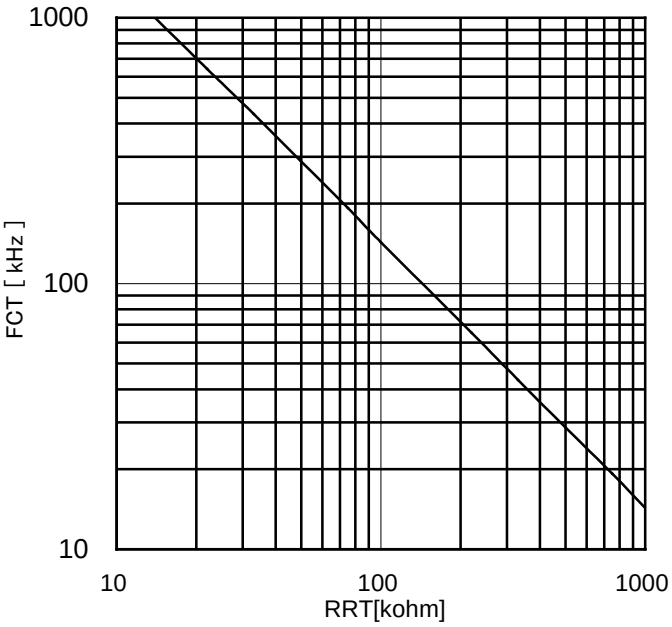

Figure 13. FCT [kHz] vs RRT[kohm]

© 2013 ROHM Co., Ltd. All rights reserved.

2. Understanding BD9470AEFV・BD9470AFM

●Pin Functions

○*ISET* （HTSSOP-B28:8PIN/HSOP-M28：1PIN）

The ISET pin is a resister value of output current setting. The output current ILED vary in inverse proportion to resister value. The relation of the output current ILED and ISET pin connecting resistor RISET are as bellow.

$$R_{ISET} = \frac{3000}{I_{LED}[mA]} \quad [k\Omega]$$

However, current setting range is from 40mA to 150mA.
And the setting of ISET resistor is bellow at using 150mA to 250mA.

$$R_{ISET} = 2653 \times (\ I_{LED}[mA]\ )^{-0.9753} \quad [k\Omega]$$

ILED(mA)	150	160	170	180	190	200	210	220	230	240	250
RSET(kohm)	20.00	18.80	17.72	16.76	15.90	15.12	14.42	13.78	13.19	12.66	12.16

For a setting example, please refer to ‘3.1 application explanation / LED current setting’.
When the RISET is shorted and the ISET pin is grand shorted, the LED current is OFF and the FAIL=OPEN(abnormal signal) to prevent flowing a large current to LED pin when it becomes less than VISET×0.90V(typ).
When the ISET pin back to normal state the LED current return to former system, too and the FAIL=GND(normal signal).
It prepare automatically to suitable LED feedback voltage that can output LED current set by ISET pin.
In short LED feedback voltage is dropped when the LED current is small and the IC heating is held automatically.
In case of a large current is needed, raise the LED pin feedback voltage. And it adjust automatically to LED pin voltage that can be flow large LED current.
The calculation is as below.

$$VLED = 3.462 \times I_{LED}\ [A] \quad [V]$$

The LED feedback voltage (VLED) is clamped to 0.4V(typ.) when the LED current (ILED) is less than 115.6mA.

○*PWM1-6* （HTSSOP-B28:9,10,11,12,13,14PIN / HSOP-M28：2,3,4,5,6,7PIN）

The ON/OFF pin for LED driver. Light can be modulated by changing the duty cycle through the direct input of a PWM light modulation signal in each PWM pin.
The high and low voltage levels of PWM_x pins are as listed in the table below.

State	PWMxvoltage
LED ON state	PWMx=1.5V~15.0V
LED OFF state	PWMx= - 0.3V～0.8V

The sequence of STB/PWM for start-up, please input PWM signal before STB or the same timing STB=PWM=ON.

○*GND* （HTSSOP-B28:15PIN / HSOP-M28：8PIN）

IC internal analog GND pin.

○*FAIL* （HTSSOP-B28:16PIN / HSOP-M28：9PIN）

FAIL signal output pin（OPEN DRAIN）.Internal NMOS will become OPEN while abnormal is detected.

State	FAILoutput
Normal	GND
Abnormal（After Timer Latch）	OPEN Level

○*OVP* （HTSSOP-B28:17PIN / HSOP-M28：10PIN）

The OVP pin is an input pin for overvoltage protection and short circuit protection of DC/DC output voltage. If over voltage is detected, the OVP pin will stop the DC/DC converter conducting step-up operation. If Vout was increased by abnormality, timer is set while OVP＞2.9V(typ.).when it comes to OVP＞3.0V, timer will ON at the same time and to stop DCDC. Although Counter will be stopped when OVP＜2.9V during counting time, in the state of OVP>2.9V, when internal counter completed 2^{18}count（262152 count）, the system will be latched.
When the short circuit protection (SCP) function is activated, the DC/DC converter will stop operation, and then the timer will start counting, after 2^{16} count（65536 count）, DCDC and LED driver will stop and latch.
The OVP pin is of the high impedance type and involves no pull-down resistor, resulting in unstable potential in the open-circuit state. To avoid this problem, be sure to make input voltage setting with the use of a resistive divider or otherwise. OVP pin will be feedback pin when PWM=L. Also, this pin will hold OVP voltage at that time when switch PWM = H to L.
For setting example, refer to information in“3.4 Selection of External Components-OVP/SCP setting procedure
OVP Voltage keep internal IC with PWM=Low timing, and VOUT voltage can hold by using copied OVP voltage while PWM=Low.（The OVP keep voltage range is 0~3V, 30steps）.For setting example, refer to information in “3.2 Selection of External Components”, “Explanation of VOUT（OVP） voltage holding function when PWM=Low”

© 2013 ROHM Co., Ltd. All rights reserved.

○*LED1-6* （HTSSOP-B28:18,19,20,22,23,24PIN / HSOP-M28：11,12,13,15,16,17PIN）

LED constant current output pins. Current value setting can be made by connecting a resistor to the ISET pin.
For the current value setting procedure, refer to the description of “ISET pin”.
If any of the LED pins is put in an abnormality state (short circuit mode, open circuit mode, ground short mode), the relevant protection function will be activated.

・LED pin short circuit protection function (LSP)

When any LED is in short state (more than LED=9.0V(typ)) the LED SHORT is detected.
After abnormal detection, the timer count starts. The LED that is abnormal detection after 2^{16} count is stopped and other LED driver operates normally.

・LED pin open circuit protection function (LOP)

If any of the LED pins becomes open-circuited (0.2V (Typ.) or less), LED_OPEN will be detected. When this error is detected, the timer will start counting, When it completes counting the preset period of time, only LED driver that detected the error will stop operation and other LED driver will conduct normal operation.

・LED GND_SHORT protection function

When any LED pin is GND shorted the LED pin becomes less than 0.20V and the pin is latched because of LED_OPEN detection. After that, the LED pin is pull upped by inner supply but it continues less than 0.2V state in grand shorted. After detecting timer of open state, if the grand shorted (open) state continues 2^7 counts all systems are latched.

To prevent the miss detection there is 4 count interval of mask before starting the timer count.
If PWM=H time is
PWM=H time < 4count・・・Not detect protection because it is in interval time
PWM=H time > 4count・・・Detect protection because it is out of interval time
Please verify enough to operate narrow PWM.

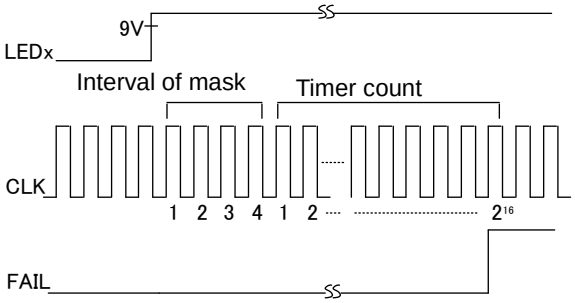

Figure 14. Timing chart of timer count

○LED_GND （HTSSOP-B28:21PIN / HSOP-M28：14PIN）

The LED_GND pin is a power ground pin used for the LED driver block.

○UVLO （HTSSOP-B28:25PIN / HSOP-M28：18PIN）

This pin is used to for step-up DC/DC converter. When UVLO pin voltage reaches 3.0V (Typ.) or more, IC will initiate step-up operation. If it reaches 2.7V (Typ.) or less, the IC will stop the step-up operation.
The UVLO pin is of the high impedance type and involves no pull-down resistor, resulting in unstable potential in the open-circuited state. To avoid this problem, be sure to make input voltage setting with the use of a resistive divider or otherwise.
For calculation examples, refer to information in ’3.1 application explanation/UVLO setting procedure’

○LSP （HTSSOP-B28:26PIN / HSOP-M28：19PIN）

The setting pin for detection voltage of LED short circuit protection. The LED short circuit detection voltage is set to 9V (Typ.) with the LSP pin being in the open-circuited state. However, making a change to the LSP pin input voltage will allow the threshold for LED short circuit protection to be changed.
The relation between the LSP pin voltage and the LED short circuit protection detection voltage is given by the following equation.

$$VLSP_{SHORT} = \frac{VLED_{SHORT}}{10} \quad [V]$$

Here LED_{SHORT}：LED detection voltage
VLSP：LSP setting voltage

LSP pin input voltage setting should be made in the range of 0.3V to 2.5V.
For setting example, refer to information in’3.1 application explanation/LSP setting procedure’

© 2013 ROHM Co., Ltd. All rights reserved.

○STB (HTSSOP-B28:27PIN / HSOP-M28：20PIN)

The pin is used to ON/OFF the IC and allowed for use to reset the IC from shutdown.
The IC state is switched between ON and OFF state according to voltages input in the STB pin. Avoid using the STB pin between two states (0.8 to 2.0V).

Input sequence of STB/PWM for startup, please input PWM before STB or at the same timing.
While in shutdown mode, the timer keeps counting until the IC is completely shut down. For details of shutdown operation, refer to information in'3.1 application explanation/ the setting of REG58 capacity and shutdown procedure'

○VCC （HTSSOP-B28:28PIN / HSOP-M28：21PIN）

IC power supply pin. Input range is 9~35V.
VCC pin voltage reaches 7.5V (Typ.) or more, the IC will initiate operation. If it reaches 7.2V (Typ.) or less, IC will be shut down.

○REG58 （HTSSOP-B28:1PIN / HSOP-M28：22PIN）

The REG pin is used in the DC/DC converter driver block to output 5.8V voltage. The maximum operating current is 15mA.Using the REG pin at a current higher than 15mA can affect the N pin output pulse, causing the IC to malfunction and leading to heat generation of the IC itself. To avoid this problem, it is recommended to make load setting to the minimum level.
In addition, The REG58 pin is also allowed for use as discharge timer for DC/DC output capacitance.
For details, refer to information in '3.1 application explanation/ the setting of REG58 capacity and shutdown procedure'

○CS （HTSSOP-B28:2PIN / HSOP-M28：23PIN）

The CS pin has the following two functions.
1. DC/DC current mode current feed Back function
Current flowing through the inductor is converted into voltage by the current sensing resistor RCS which connected to CS pin and this voltage is compared with voltage set with the error amplifier to control the DC/DC output voltage.
2. Inductor current limit function (OCP pin)
The CS pin also incorporates the overcurrent protection (OCP) function. If the CS pin voltage reaches 0.4V (Typ.) or more, switching operation will be forcedly stopped.
For detailed explanation, Please refer to information in "3.2 Selection of DC/DC Components-OCP setting procedure / DC/DC component current tolerance selection procedure".

○N （HTSSOP-B28:3PIN / HSOP-M28：24PIN）

The N pin is used to output power to the external NMOS gate driver for the DC/DC converter in the amplitude range of approximately 0 to 5.8V.Frequency setting can be adjusted by a resistor connected to the RT pin. For details of frequency setting, refer to the description of the RT pin.

○DCDC_GND （HTSSOP-B28:4PIN / HSOP-M28：25PIN）

The DCDC_GND pin is a power ground pin for the driver block of the output pin N.

○RT （HTSSOP-B28:5PIN / HSOP-M28：26PIN）

The RT pin is used to connect a DC/DC frequency setting resistor. DC/DC drive frequency is determined by connecting the RT resistor.
・Relationship between Drive frequency and RT resistance (Ideal)

$$R_{RT} = \frac{15000}{f_{SW}[kHz]} \quad [k\Omega]$$

However, drive frequency setting is limited in the range of 100 kHz to 500kHz.
For calculation, refer to information in '3.1 application explanation/ DC/DC converter drive frequency setting'
When it reaches under VRT×0.90V(typ), DCDC operation will be stopped in order to prevent from high speed oscillation when the RT resistance is shorted to GND. And when RT pin returns to normal state, DCDC also returns to operation.

○FB （HTSSOP-B28:6PIN / HSOP-M28：27PIN）

The FB pin is an output of DC/DC current mode error amplifier. FB pin detects the voltages of LED pins (1 to 6) and controls inductor current so that the pin voltage of the LED located in the row with the highest Vf will come to 0.45V(130mA, typ.). Therefore, the pin voltages of other LEDs will become higher by Vf variation.
FB Voltage keep internal IC with PWM=Low timing, and it can hold by using copied FB voltage while PWM=Low.（The FB keep voltage range is 0~4V, 40steps）
For setting example, refer to information in '3.1 application explanation/ the necessity for holding output voltage and FB voltage while PWM=Low'

○SS （HTSSOP-B28:7PIN / HSOP-M28：28PIN）

Soft start time and duty for soft start setting pin. The SS pin normally sources 2.0uA (Typ.) of current.
The IC has a built-in soft start start-up circuit independent of PWM light modulation, and thereby raises FB voltage as SS pin voltage rises independent of the duty cycle range of PWM light modulation. When the SS pin voltage reaches 3.7V (Typ.), soft start operation will be completed to unmask the LED protection function.
For setting example, refer to information in '3.1 application explanation/ start-up and SS capacity setting explanation'

© 2013 ROHM Co., Ltd. All rights reserved.

3. Application of BD9470AEFV・BD9470AFM

3.1 BD9470AEFV・BD9470AFM examination for application

●Start-up and SS capacity setting explanation

This section described the start-up sequence of this IC.

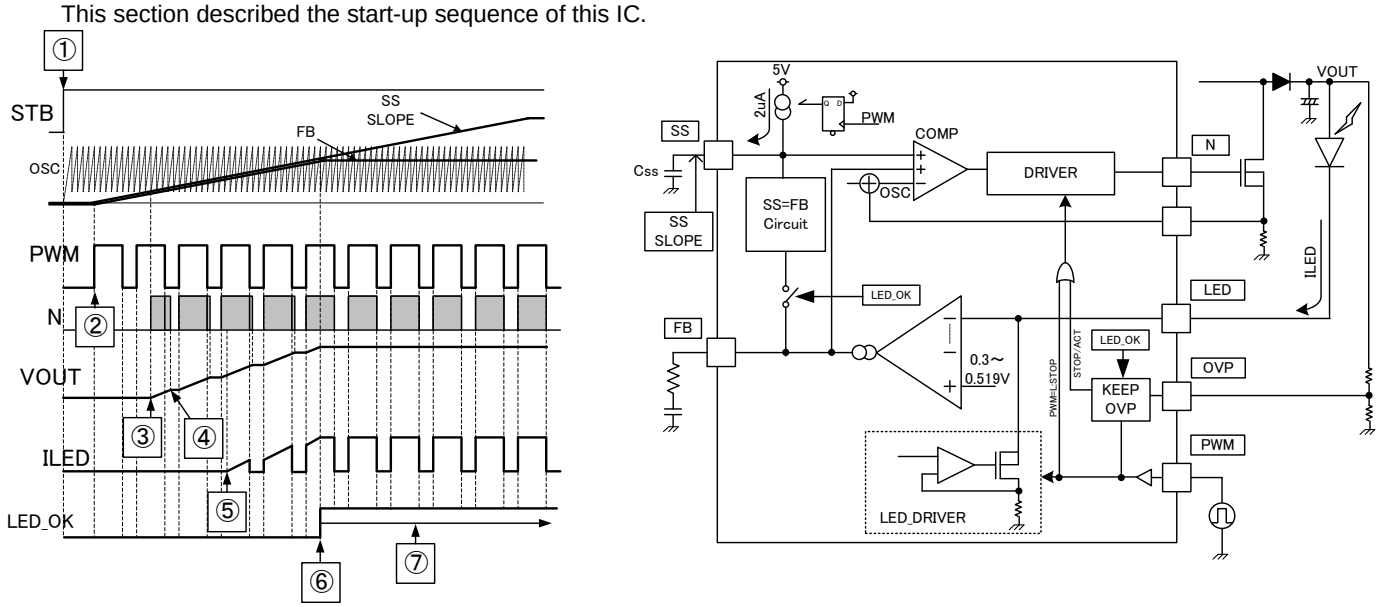

Figure 15. Timing chart of start-up

○Description of start-up sequence

①STB=PWM=ON

②System is ON.SS starts to charge.

At this time, a circuit in which SS voltage for slow start is equal to FB voltage regardless of whether the PWM pin is set to Low or High level.

③Since the FB pin and SS pin reach the lower limit of the internal sawtooth wave, the DC/DC converter operates and VOUT voltage rising.

Until it reachs a certain voltage even PWM=Low by vlotage maintenance function.

（For detailed OVP maintanence function, please refer to"VOUT(OVP) maintanence function section".）

⑤Vout voltage continues rising to reach a voltage at which LED current starts flowing.

⑥When the LED current reaches the set amount of current, isolate the FB circuit from the SS circuit. With this, the start-up operation is completed.（Fast start-up is also diasabled by VOUT maintanence function）

⑦After that, conduct normal operation following the feedback operation sequence with the LED pins.

If the SS pin voltage reaches 3.7V or more, the LED protection function will be activated to forcedly end the SS and FBequalizing circuit.

○ SS capacity setting method

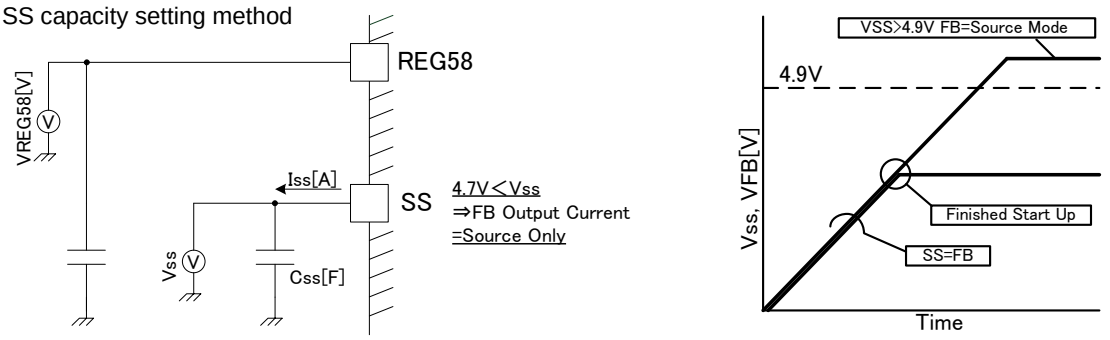

Figure 16. SS setting procedure in FB Source mode

Boot system as above described, because of start-up in the state of FB=SS, the start-up time can be imaged of the time to reach the point from the feedback voltage FB from STB = ON.If you SS> 4.9V, FB output current mode will become Source mode operation.

If the feedback voltage of FB is the same as VSS and the time can be calculated as below.

$$T_{ss} = \frac{C_{ss}[F] \times VFB[V]}{2[\mu A]} \quad [Sec]$$

© 2013 ROHM Co., Ltd. All rights reserved.

However, if SS is set too short, inductor rush current will occur during start-up.In addition, if SS time is set too long, will result in the brighter in stages.SS capacity will veries with various factors, such as voltagestep-up ratio, DCDC driver frequency, LED current and output output condencer, so it is recommended to test and confirm on the actual system.
（SS capacity is often set at about 0.047uF～0.47uF approximately as a reference value）

○Setting example

SS time when the start-up is complete and Css = 0.1uF, Iss = 2uA, Vss = 3.7V will be calculated as follows.

$$T_{ss} = \frac{0.1E^{-6}\,[F] \times 3.7\,[V]}{2\,E^{-6}\,[A]} = 0.185 \quad [Sec]$$

In addition, when FB output is operated in Sink/Source mode（refer to “FB pin output current setting for detailed explanation.）, SS voltage can be set to be in the range of 3.9V～4.4V at the SS pin voltage resistor divider.Soft-start time will be set in that case is as follows.

$$T_{ss} = -\frac{1}{A}\ln\left(1 - \frac{A \times Vss[V]}{B}\right) \quad [Sec]$$

$$A = \frac{R1\,[ohm] + R2\,[ohm]}{Css\,[F] \times R1\,[ohm] \times R2\,[ohm]}$$

$$B = \left(\frac{VREG58\,[V]}{R1\,[ohm]} + Iss[A]\right) \div Css[F]$$

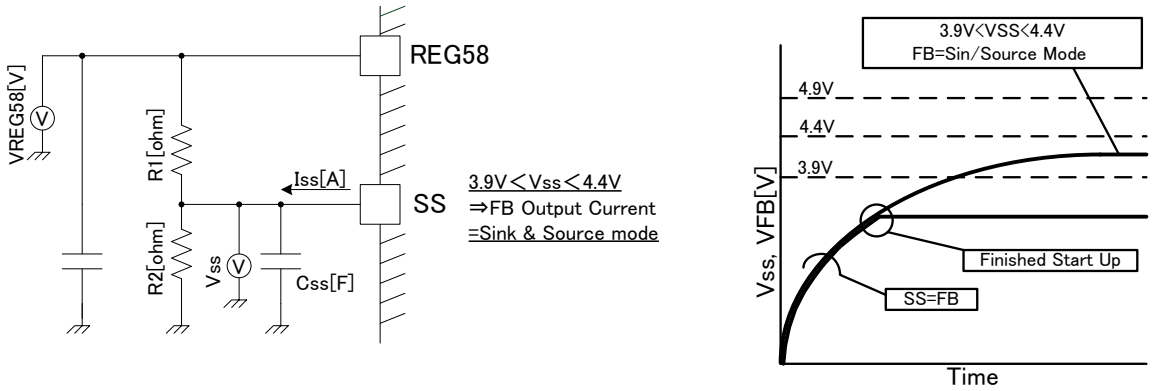

Figure 17. SS setting procedure in FB sink/ source mode

○Setting example

When R1=200kohm, R2=470kohm, Css=1.0uF, VREG58=5.8V, Iss=2uA, Vss=3.7V, SS time is set as below

$$T_{ss} = -\frac{1}{7.12}\ln\left(1 - \frac{7.12 \times 3.7}{31}\right) = 0.266 \quad [Sec]$$

© 2013 ROHM Co., Ltd. All rights reserved.

●**The setting of REG58 capacity and shutdown procedure**

VOUT discharge function is built-in this IC when IC is shutdowned, the below decribes the operation sequence.

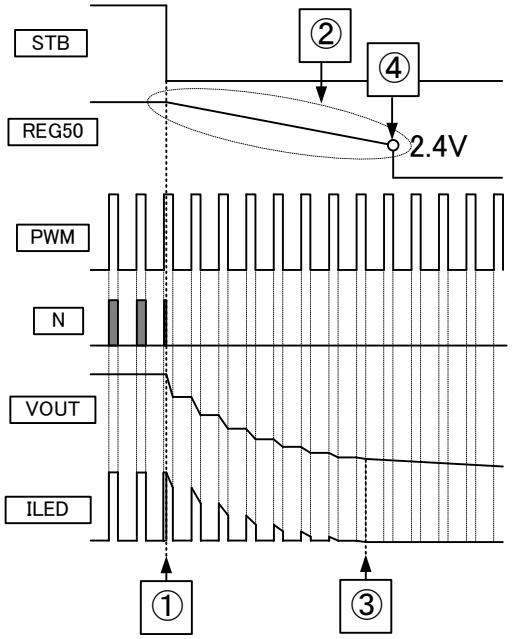

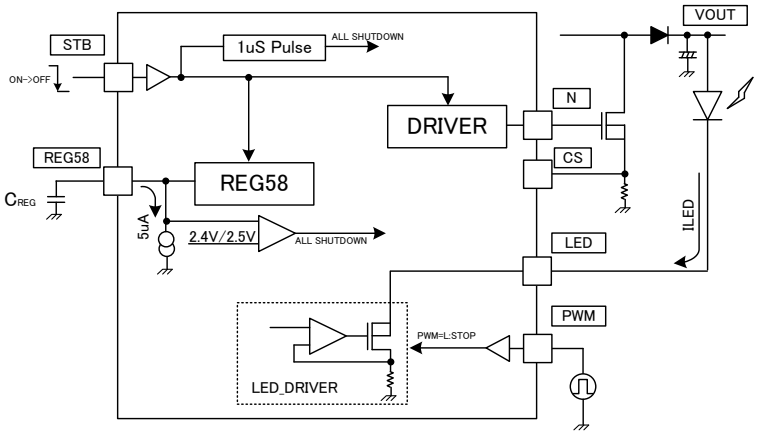

Figure 18.Timing chart of shutdown

○**Explanation of shutdown sequence**

①Set STB pin to “OFF” will stops DC/DC converter and REG58, but LED driver will remain operation.
（Reset signal is output 1uS extent to reset the latch on the IC at this time.Therefore, undershooting will be generated on LED current, but 1uS is very short will not affect The brightness.）
②Discharge the REG58 pin voltage from 5.8V to 2.4V with –5uA current.
③The VOUT voltage will be fully discharged with ILED current and the ILED current will no longer flow.
④When REG58pin voltage will reach 2.4V (Typ.) or less to shut down all systems

○**REG58 capacitance setting procedure**

The shutdown time “T_{OFF}” can be calaulated by the following equation.

$$T_{OFF} = \frac{C_{REG}[F] \times 3.4\,[V]}{5\,[uA]} \quad [Sec]$$

The longest VOUT discharge time will be obtained when the PWM duty cycle is set to the minimum VOUT.
Make REG capacitance setting with an adequate margin so that systems will be shut off after VOUT voltage is fully discharged.

© 2013 ROHM Co., Ltd. All rights reserved.

● **VCC series resistance setting procedure**

By inserting a series resistor to VCC will has the following affection.
①Reduce the voltage VCC, and it is possible to suppress the heat generation of IC.
（ICC×VIN is power consumption of IC）
②Possible to Raise the surge ability to VCC.
However, if resistance is set too large, it is needed to consider that will result in VCC become VCC<9V（Minimum operation voltage）.So the appropriate series resistance setting is needed.

The current influx of IC I_IN as shown on the right is
・Circuit current of IC…ICC
・Current to load is connected toREG58…IREG
・Current which used to drive DCDC FET…IDCDC
There are 3 paths within IC and the ΔV of RVCC can be decided.
VCC voltage generated by the relation as above described at that time can be represented as below.

$$VCC[V] = VIN[V] - \left(ICC[A] + IDCDC[A] + IREG[A]\right) \times RVCC[\Omega] \quad [V] \quad > \quad 9[V]$$

The Criterion of 9V is the minimum operating limit of the IC.
When a series resistance is considered, please set with a sufficient margin.

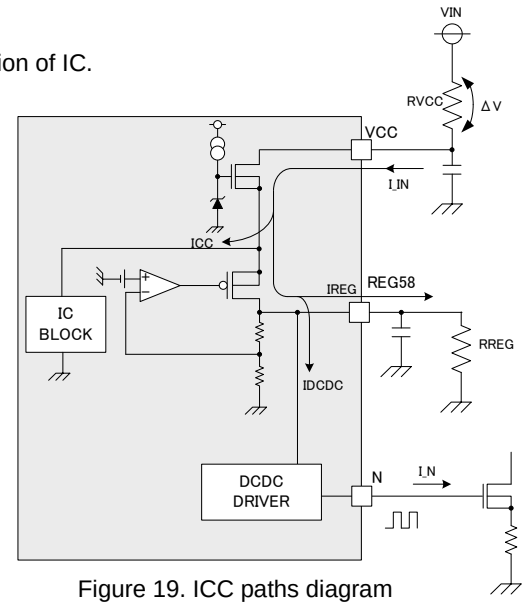

Figure 19. ICC paths diagram

○**Setting example**

Above equation can be transformed as below.

$$RVCC[\Omega] \quad < \quad \frac{VIN[V] - 9[V]}{ICC[A] + IDCDC[A] + IREG[A]}$$

In typical operation, VIN=24V, ICC=5.5mA, RREG=10kΩ, IDCDC=2mA can be assumed and the VCC voltage is

$$RVCC[\Omega] \quad < \quad \frac{24[V] - 9[V]}{0.0055[A] + 0.002[A] + 5.8[V]/10000[\Omega]} = 1.86[k\Omega]$$

However, the result is in typical operation and the variability and margin is not considered.
If the variability of VIN=24V×(-20%）,ICC=8.5mA,RREG=10k×(-5%）,REG58=5.8V×(+5%),IDCDC=2mA×(+100%),VCC operation limit voltage9V×(+20%) are assumed:

$$RVCC[\Omega] \quad < \quad \frac{24 \times 0.8[V] - 9 \times 1.2[V]}{0.0085[A] + 0.002 \times 2[A] + 5.8 \times 1.015[V]/(10000[\Omega] \times 0.95)} = 640[\Omega]$$

According to above result, set RVCC = 640Ω or less is adequate on actual application.
When a series resistance is considered, please set with a sufficient margin.

© 2013 ROHM Co., Ltd. All rights reserved.

●The necessity for holding output voltage and FB voltage while PWM=Low

In conventional control method, DCDC will be stopped and FB voltage become high impendence while PWM=Low. However, if PWM=0% is continued to inputted to system, output voltage and FB voltage is reduced because of discharge phenomenon.eventually output voltage is equal to VIN, and FB voltage drop to 0V.There are several problems such as the following listed if PWM dimming signal is tried to light-up a system.

①Slow start cannot be controlled resulting in the FB voltage overshoot and rush current flow to Inductor.

②Flash phenomenon occur due to start-up control does not work.

③Because there is a need to re-boost, take a long time to light up.

In this IC, the problems as above mentioned is resolved by coping output voltage and FB voltage to IC internally at a time of PWM from High to Low.

The below describes FB and VOUT voltage holding function in detail.

○Explanation of FB voltage holding function while PWM=Low

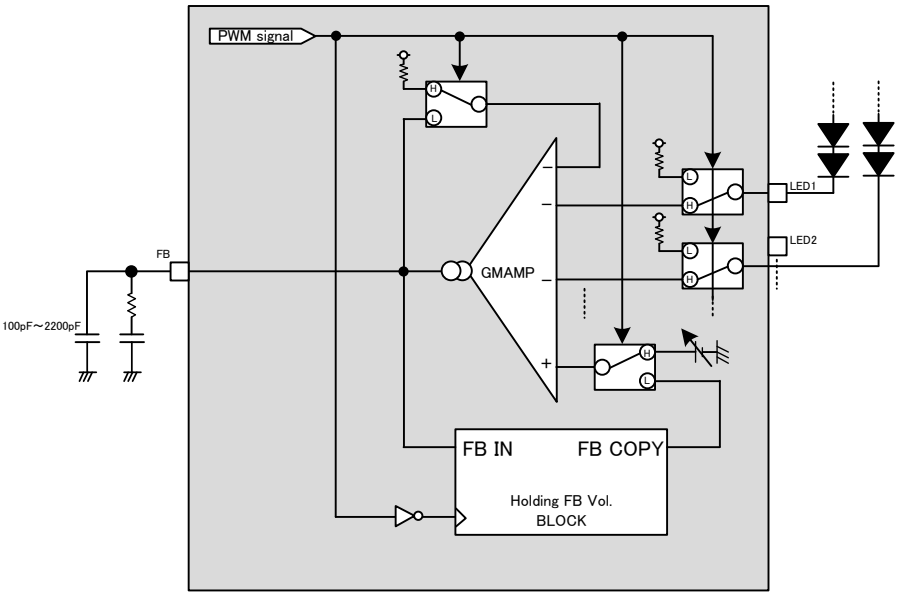

Figure 20. Block diagram of KEEP_FB

FB holding function means FB voltage will be copy to IC internally at a time of PWM from High to Low, FB voltage will be maintained even in the period of PWM=Low.

Because FB voltage resolution is split by 40 from 4V, so the voltage can be copied to IC internally in 0.1V Step.

In addition, FB pin voltage will be influenced by DCDC operation, the copied have ±0.1V difference problem. But because FB voltage is returned as feedback voltage immediately and will not cause an operational problem while PWM=H, it is recommended to add about 100pF～2200pF to FB pin for noise reduction.

© 2013 ROHM Co., Ltd. All rights reserved.

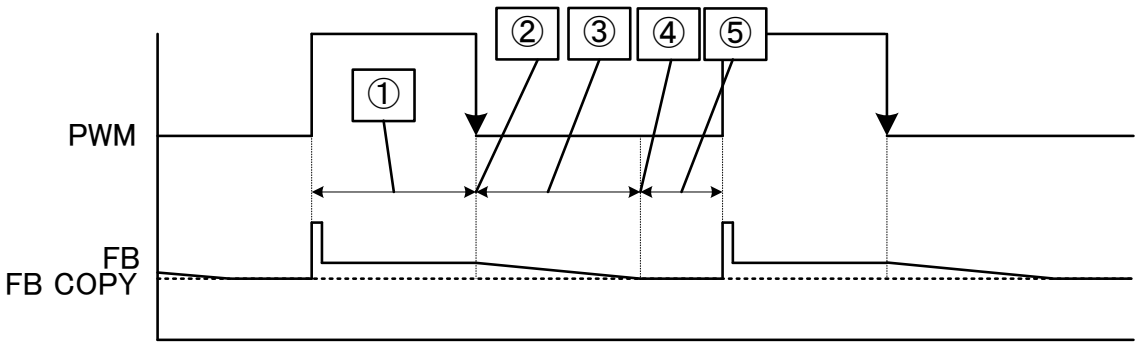

Figure 21. Timing chart of KEEP_FB

①PWM=High, normal feedback operation by LED pin
②FB voltage is copied to IC at a time of PWM from High to Low. FB voltage will be copied by less than 1Bit.
For Example：when FB=2.16V, FB COPY voltage is 2.1V.
③GMAMP is works as Buffer with while PWM=Low, FB voltage is discharged to FB COPY voltage.
④FB COPY=FB voltage.
⑤FB COPY=FB voltage and maintain.

If PWM=0% and because follow the state⑤ continuously, FB voltage will not dropped by natural discharge.

※Notice
FB voltage holding function is performed at 0.1V STEP. If PWM signal is in low duty, FB voltage is not able to rise sufficiently when FB series resistance is small causing to RFB×IFB(typ.100uA)＜0.1V(typ.), The output voltage may not be boosted up to the set voltage.
Therefore, it is recommended to set RFB> 2kohm so that ΔV = RFB × IFB> 0.2V.

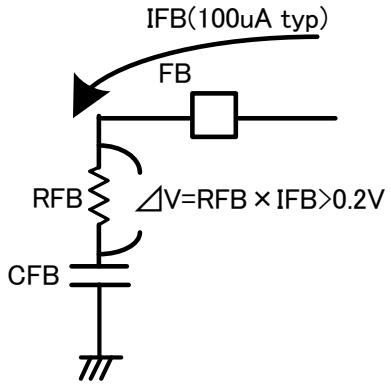

Figure 22. Voltage to FB resistor

© 2013 ROHM Co., Ltd. All rights reserved.

●**Explanation of VOUT（OVP） voltage holding function when PWM=Low**

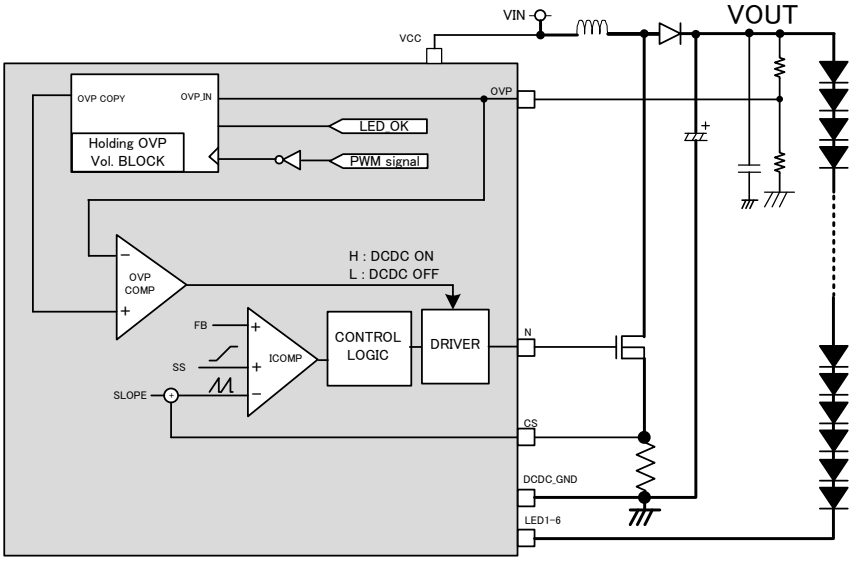

Figure 23. Block diagram of KEEP_OVP

OVP holding function means VOUT(OVP) voltage will be copy to IC internally at a time of PWM from High to Low, voltage will be maintained even in the period of PWM=Low.
In addition to measures of the above problems, by applying this function, the high-speed start-up can be achieved without depending on the PWM.
Because VOUT voltage resolution is the same as FB holding function which is split by 40 from 4V,so the voltage can be copied to IC internally in 0.1V Step.
The description of OVP holding function is divided into narrow PWM operation and start-up operation.

○**Explanation of OVP holding function at start-up**

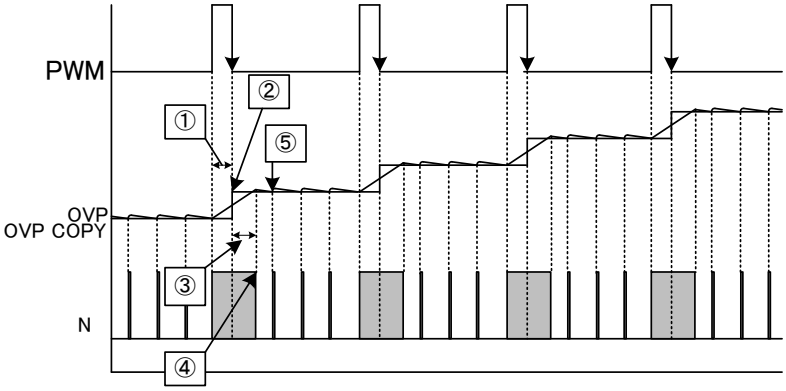

Figure 24. Timing chart 1 of KEEP_OVP

In order to launch high speed start-up without depending on the PWM DUTY, OVP holding function will behave like the following descriptions.
①PWM=High, normal boost operation.
②OVP voltage is copied into IC when PWM is from High to Low.OVP voltage will be copied upper **1BIT** at this time. For example: if OVP=2.43V, the copied voltage is 2.5V in IC.
③The copied OVP voltage will be compared with OVP pin voltage internally, if OVP_COPY>OVP, DCDC is operated.In other words, it is possible to achieve fast start-up by letting the voltage on the 1BIT boosted up in the interval of PWM = Low.
④When OVP_COPY<OVP pin voltage, DCDC is stopped.
⑤Even if in the period of PWM=Low and VOUT is discharged, output voltage will be hold by performing DCDC operation in order to let OVP_COPY＜OVP pin voltage.

© 2013 ROHM Co., Ltd. All rights reserved.

○Explanation of OVP holding function in narrow PWM duty

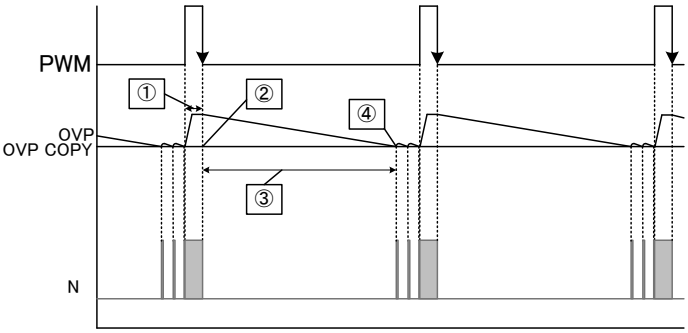

Figure 25. Timing chart 2 of KEEP_OVP

DCDC operates only in the duration of PWM=High while narrow PWM is inputted, output voltage drops when PWM=0%. But, DCDC is operated by coping voltage even if PWM=Low duration in this IC and output voltage will not drops.
①PWM=High, normal operation.
②OVP voltage is copied into IC when PWM is from High to Low.OVP voltage will be copied under 1BIT at this time. For example: if OVP=2.43V, the copied voltage is 2.4V in IC.
③VOUT is discharged by OVP resistance.
④When copied OVP_COPY＞OVP pin voltage, DCDC is operated, when OVP_COPY＜OVP voltage, DCDC is stops.

When operates in PWM=0%, the point④ will be repeated and repeated, so the output voltage will not drops naturally.

○Condition of copy OVP voltage

The copied OVP pin voltage as above explanation, it has upper and lower 1BIT difference according to below condition.
Conditions of copy upper 1BIT
：From startup to completion of step-up
：OVP detection state
Conditions of copy lower 1BIT
：Normal operation state (OVP undetected state)

※The reason about why copy the voltage of upper 1BIT when OVP is detected
When OVP is detected by OVP=3V and stops DCDC operation. After that while PWM=Low and if copy lower 1BIT voltage will results in OVP=2.9V and release OVP detection function, therefore it is designed to copy upper 1BIT when OVP is detected.

© 2013 ROHM Co., Ltd. All rights reserved.

●**FB current Source mode・Sink/Source mode**

The output of GMAMP is constant current control in normal operation ans output anout±100uA(typ.) in this IC.
But, when PWM scanning operation and local dimming is performed, total LED current and output voltage will different by each timming and FB feedback voltage.The below describes the this operation.

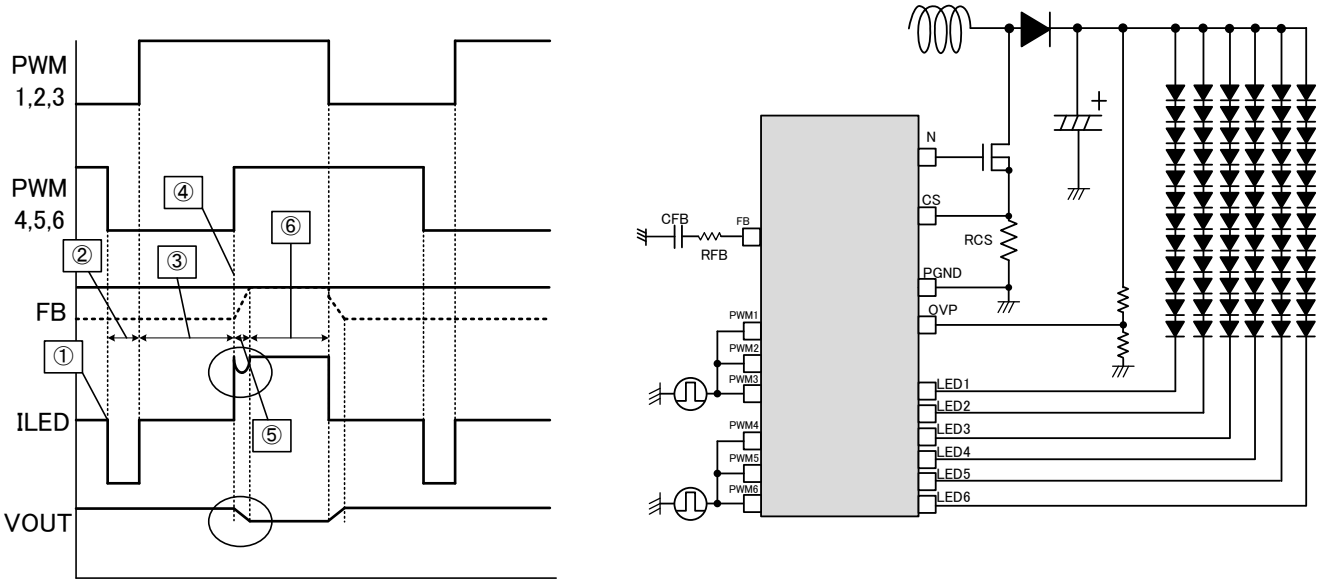

Figure 26. Timing chart of FB sink/source mode

As above shown,short PWM1,2,3 ans PWM4,5,6, assumed that scanning operation is performed.
At this time, the sequence is described as below.
①When PWM4,5,6=High→Low, FB voltage, VOUT（OVP）voltage is copied
②Copied voltage is hold.
③When PWM1,2,3=High again, normal DCDC operation
④When PWM4,5,6=High again, LED current increase.
⑤Because LED current increase resulting in FB voltage change.it take a long transition time because FB source current is 100uA at this time, therefore FB voltage is not insufficient and output voltage and LED current will drop.
⑥FB voltage reaches the feedback voltage and LED current and output voltage will operate normally.

In other words, ILED current drops at the point ⑤, This may be due to the transition time of the behavior that FB current sink first and then charge again.

© 2013 ROHM Co., Ltd. All rights reserved.

Therefore, in order to solve this problem in this IC, equipped with a mode of “FB current only source 0uA～+100uA”as a countermeasure to reduce the LED current drop problem.
“FB Source mode”is described as below.

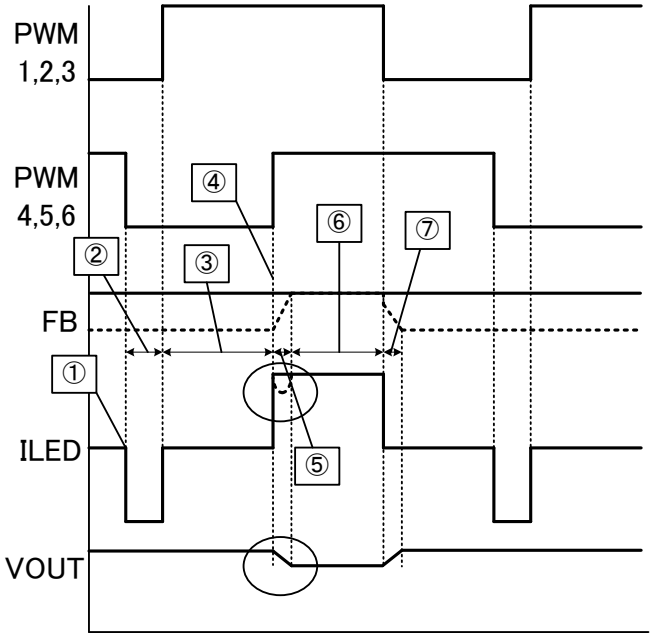

Figure 27. Timing chart of FB source mode

①when PWM4,5,6=High→Low, FB voltage, VOUT（OVP）voltage is copied
②copied voltage is hold.
③when PWM1,2,3=High again, normal DCDC operation.but, FB voltage is larger than feedback voltage, and VOUT setting voltage also higher.
③when PWM4,5,6=High, LED current increases.
④although LED current is increased but the FB voltage has reached the feedback voltage and will not change at this time.Therefore, there is no transition and VOUT, LED current will not drop.
⑥LED current and output voltage is operate normally
⑦When PWM1,2,3=Low, LED current reduces.But, FB is only has source ability , FB voltage is maintained continuely
（But, despite the decreasing of LED current, output voltage is increases because FB voltage is not changed.）

According to above operation, the LED undershoot problem cab be prevented by FB source mode.
However, the above description is a simplified explanation for behavior, because the actual behavior of a waveform is different from the above, please check on the actual system.

When FB source mode is used, care must be taken to the following contents.

Because it can be held at a higher voltage than normal FB voltage, output voltage may be higher. Therefore, please note that the heat might be higher than PWM = 100% while scanning operation is performed.

© 2013 ROHM Co., Ltd. All rights reserved.

●LED Current setting

Setting of LED output current "ILED" can be made by connecting a resistor RISET to the ISET pin.
RISET and ILED current setting equation

$$R_{ISET} = \frac{3000}{I_{LED}[mA]} \quad [k\Omega]$$

However, LED current setting should be made in the range of 40mA to 150mA.
And the setting of ISET resistor is bellow at using 150mA to 250mA.

$$R_{ISET} = 2653 \times (\ I_{LED}[mA]\ )^{-0.9753} \quad [k\Omega]$$

ILED(mA)	150	160	170	180	190	200	210	220	230	240	250
RSET(kohm)	20.00	18.80	17.72	16.76	15.90	15.12	14.42	13.78	13.19	12.66	12.16

○Setting Example

To set ILED current to 100mA, RISET resistance is given by the following equation

$$R_{ISET} = \frac{3000}{I_{LED}[mA]} = \frac{3000}{100[mA]} = 30 \quad [k\Omega]$$

●DC/DC converter drive frequency setting

DC/DC converter drive frequency is determined by making RT resistance setting.

○Drive frequency vs. RT resistance (ideal) equation

$$\boxed{R_{RT} = \frac{15000}{f_{SW}[kHz]} \quad [k\Omega]}$$

Here fsw = DC/DC converter oscillation frequency [kHz]

This equation has become an ideal equation without any correction item included.
For accurate frequency settings, thorough verification should be performed on practical sets.

○Setting example

To set DC/DC drive frequency "fsw" to 200 kHz, RRT is given by the following equation

$$R_{RT} = \frac{15000}{f_{sw}[kHz]} = \frac{15000}{200[kHz]} = 75 \quad [k\Omega]$$

And , the drive frequency setting range is 100kHz～500kHz.

© 2013 ROHM Co., Ltd. All rights reserved.

●UVLO setting procedure

UVLO pin for step-up DC/DC power supply. If the UVLO pin voltage reaches 3.0V (Typ.) or more, the IC will start step-up operation. If it reaches 2.7V (Typ.) or less, the IC will stop the step-up operation.
UVLO pin is the high impedance type and no pull-down resistor inside, resulting in unstable potential in the open-circuit state. To avoid this problem, be sure to set input voltage with the use of a resistive divider.
While the VIN voltage to be detected is set by the use of resistive dividers R1 and R2 as described below, resistance setting will be made by the following equation.

○UVLO setting procedure

Assume that VIN is reduced and detected,
UVLO is "VIN_{DET}", R1 and R2 setting will be made by the following equation:

$$R1 = R2[k\Omega] \times \frac{(VIN_{DET}[V] - 2.7[V])}{2.7[V]} \quad [k\Omega]$$

○UVLO release voltage setting equation

When R1 and R2 setting is determined by the equation shown above,
UVLO release voltage will be given by the following equation.

$$VIN_{CAN} = 3.0V \times \frac{(R1[k\Omega] + R2[k\Omega])}{R2[k\Omega]} \quad [V]$$

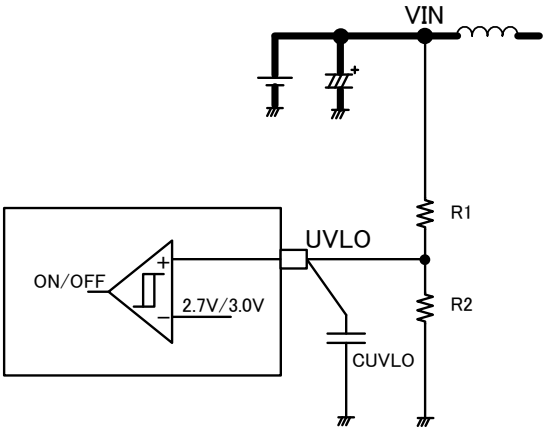

Figure 28. Block diagram of UVLO

○Setting example

Assuming that the normal VIN operating voltage is 24V, UVLO detection voltage is 18V, and R2 resistance is 30kΩ, R1 resistance setting is made by the following equation

$$R1 = R2[k\Omega] \times \frac{(VIN_{DET}[V] - 2.7[V])}{2.7[V]} = 30[k\Omega] \times \frac{(18[V] - 2.7[V])}{2.7[V]} = 170 \quad [k\Omega]$$

And, when UVLO release voltage VIN_{CAN} setting is made with R1 and R2, it will be given by the following equation

$$VIN_{CAN} = 3.0[V] \times \frac{(R1[k\Omega] + R2[k\Omega])}{R2[k\Omega]} = 3.0[V] \times \frac{30[k\Omega] + 170[k\Omega]}{30[k\Omega]}[V] = 20 \quad [V]$$

To select DC/DC components, give consideration to IC variations as well as individual component variations, and then conduct thorough verification on actual systems.

© 2013 ROHM Co., Ltd. All rights reserved.

●OVP/SCP setting method

The OVP pin is an input pin for overvoltage protection and short circuit protection of DC/DC output voltage.
The OVP pin is a high impedance type and no pull-down resistor inside, resulting in unstable potential in the open circuit state. To avoid this problem, be sure to make input voltage setting with the use of a resistive divider.
Conditions for each OVP protections are as listed in the table below.

Protection name	Protection pin	Detection Condition	Release Condition	Timer Operation	Protection type	FAIL pin
OVP Timer SET / OVP Cancel	OVP	OVP>2.9V	OVP<2.9V	Yes	All latch	GND
OVP Detect / DCDC STOP	OVP	OVP>3.0V	OVP<3.0V	No	Only DCDC converter stops during detection	OPEN
SCP	OVP	OVP<0.1V	OVP>0.1V	Yes	All latch	GND

The following describes the setting procedures of that VOUT pin voltage to be detected is set by the use of resistive dividers R1 and R2 as shown in the circuit diagram below.

○OVP detection setting method

Assuming that a voltage causing VOUT to abnormally rise and detecting OVP is "$VOVP_{DET}$",
R1 and R2 setting will be made by the following equation.

$$R1 = R2[k\Omega] \times \frac{(VOVP_{DET}[V] - 3.0[V])}{3.0[V]} \quad [k\Omega]$$

○Timer set・OVP release setting equation

When R1 and R2 setting is determined by the equation shown above, OVP release voltage $VOVP_{CAN}$ will be given by the following equation:

$$VOVP_{CAN} = 2.9V \times \frac{(R1[k\Omega] + R2[k\Omega])}{R2[k\Omega]} \quad [V]$$

○SCP detection equation

When R1 and R2 setting is determined by the equation shown above, SCP setting voltage $VSCP_{DET}$ will be given by the following equation.

$$VSCP_{DET} = 0.1V \times \frac{(R1[k\Omega] + R2[k\Omega])}{R2[k\Omega]} \quad [V]$$

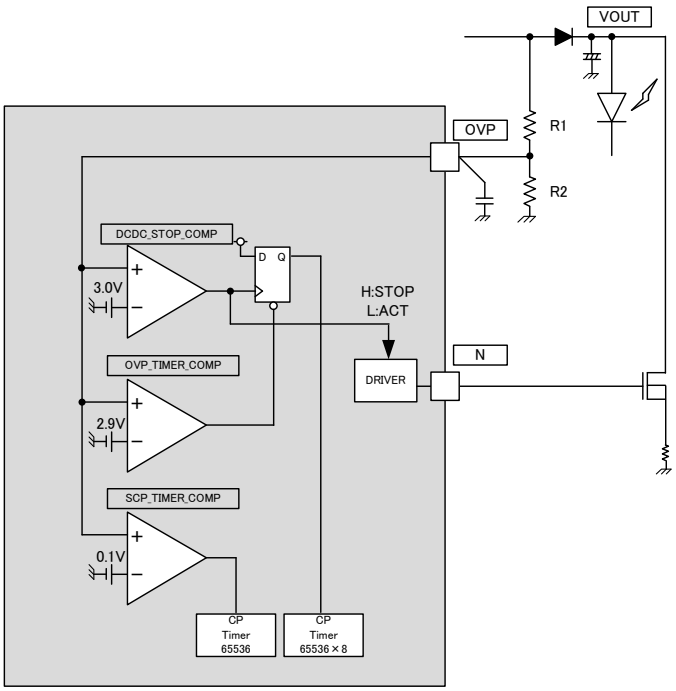

Figure 29. OVP block diagram

○Setting example

Assuming that normal VOUT voltage is 40V, OVP detection voltage $VOVP_{DET}$ is 48V, and R2 resistance is 10kΩ, R1 resistance is calculated by the following equation

$$R1 = R2[k\Omega] \times \frac{(VOVP_{DET}[V] - 3.0[V])}{3.0[V]} = 10[k\Omega] \times \frac{(48[V] - 3[V])}{3[V]} = 150 \quad [k\Omega]$$

When OVP release voltage $VOVP_{CAN}$ setting is made with the said R1 and R2, it will be given by the following equation

$$VOVP_{CAN} = 2.9[V] \times \frac{(R1[k\Omega] + R2[k\Omega])}{R2[k\Omega]} = 2.9[V] \times \frac{10[k\Omega] + 150[k\Omega]}{10[k\Omega]}[V] = 46.4 \quad [V]$$

SCP detection voltage is given by the following equation

$$VSCP_{DET} = 0.1[V] \times \frac{(R1[k\Omega] + R2[k\Omega])}{R2[k\Omega]} = 0.1[V] \times \frac{10[k\Omega] + 150[k\Omega]}{10[k\Omega]}[V] = 1.6 \quad [V]$$

Give consideration to IC variations as well as individual component variations, and then evaluate on actual systems.

© 2013 ROHM Co., Ltd. All rights reserved.

●**LSP setting procedure**

LED SHORT threshold voltage can be adjusted by setting LSP pin voltage.
LED SHORT detection voltage is set to 9V when LSP pin=OPEN state.
Please set input voltage of LSP pin from 0.3V~2.5V range.
The relation between LSP pins and LED SHORT protection voltage as below.

$$VLSP_{SHORT} = \frac{VLED_{SHORT}}{10} \quad [V]$$

Also, LSP pin divides 4V within the IC using resistive dividers (see the circuit diagram shown below)
Therefore, connecting an external resistor to the LSP pin will produce resistance combined with the internal IC resistance.

Consequently, LSP pin voltage setting using external resistive dividers, it is recommended to connect them having resistance little affected by the internal resistance.(Smaller resistance have less influence on internal resistance, but will result in larger power consumption.)

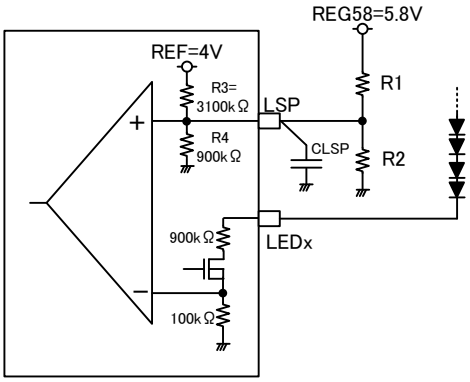

Figure 30. LSP Block diagram

○LSP detection voltage setting

If the setting of LSP detection voltage VLSP is made by dividing the REG58V voltage by the use of resistive dividers R1and R2, VLSP will be given by the following equation.

$$VLSP = \left(REG58[V] \times \frac{R2[k\Omega]}{(R1[k\Omega] + R2[k\Omega]} \right) \times 10 \quad [V] \cdots (1)$$

However, this equation includes no internal IC resistance. If internal resistance is taken into account, detection voltage VLSP will be given by the following equation.

$$VLSP = \left(\frac{R2[k\Omega] \times R4[k\Omega] \times \left(REG58[V] \times R3 + REF[V] \times R1[k\Omega]\right)}{(R1[k\Omega] \times R3[k\Omega] \times (R2 + R4) + R2[k\Omega] \times R4[k\Omega] \times \left(R1[k\Omega] + R3[k\Omega]\right)} \right) \times 10 \quad [V] \ldots (2)$$

Make setting of R1 and R2 resistance so that a difference between resistance values found by Equations (1) and (2) will come to approximately 2% or less as a guide.

○Setting example

Assuming that LSP is approximated by Equation (1) in order to set LSP detection voltage to 5V, R1 comes to 53kΩ andR2 comes to 5kΩ.LSP detection voltage taking into account internal IC resistance by Equation (2), it will be given as

$$VLSP = \left(\frac{5[k\Omega] \times 900[k\Omega] \times \left(5.8[V] \times 3100[k\Omega] + 4[V] \times 53[k\Omega]\right)}{(53[k\Omega] \times 3100[k\Omega] \times \left(5[k\Omega] + 900[k\Omega]\right) + 5[k\Omega] \times 900[k\Omega] \times \left(53[k\Omega] + 3100[k\Omega]\right)} \right) \times 10 = 5.033V[V]$$

The difference is given as:

$$\left(5.033[V] - 5[V]\right) / 5[V] \times 100 = 0.66\%$$

As a result, this setting will be little affected by internal impedance.

© 2013 ROHM Co., Ltd. All rights reserved.

●Timer latch function

This IC has a built-in timer latch counter to make setting of timer latch time by counting a clock frequency set with the RT pin.

○Timer latch time

The timer latch counter begins counting from the timing when any abnormal state is detected. The timer will be latched after a lapse of a period of time given by the following equation.
If the abnormal state continues even when PWM is set to Low level, the counter will not reset counting.

$$LATCH_{TIME} = 2^{16} \times \frac{R_{RT}}{1.5\times10^{10}} = 65536 \times \frac{R_{RT}[k\Omega]}{1.5\times10^{7}}[S]$$

Here $LATCH_{TIME}$= A period of time, which the timer is latched
R_{RT}=RT pin connecting resistance

Protection time which described above is applied for LED pin OPEN protection, LED pin SHORT protection, SCP protection.
The protection of FB overshoot and OVP protection as below:

$$LATCH_{TIME} = 2^{18} \times \frac{R_{RT}}{1.5\times10^{10}} = 262144 \times \frac{R_{RT}[k\Omega]}{1.5\times10^{7}}[S]$$

Clock oscillation of timer latch uses DCDC clock. So timer latch time depend on unevenness of DCDC oscillation. In 150kHz, timer latch time is ±5% unevenness.

○Setting Example

In LED_OPEN protection, LED_SHORT protection, SCP protection,
When RT resistance=100kohm, the timer latch time is

$$LATCH_{TIME} = 65536 \times \frac{R_{RT}[k\Omega]}{1.5\times10^{7}} = 65536 \times \frac{100[k\Omega]}{1.5\times10^{7}} = 0.437[S]$$

And, FB overshoot protection, OVP protection is

$$LATCH_{TIME} = 524288 \times \frac{R_{RT}[k\Omega]}{1.5\times10^{7}} = 262144 \times \frac{100[k\Omega]}{1.5\times10^{7}} = 1.75[S]$$

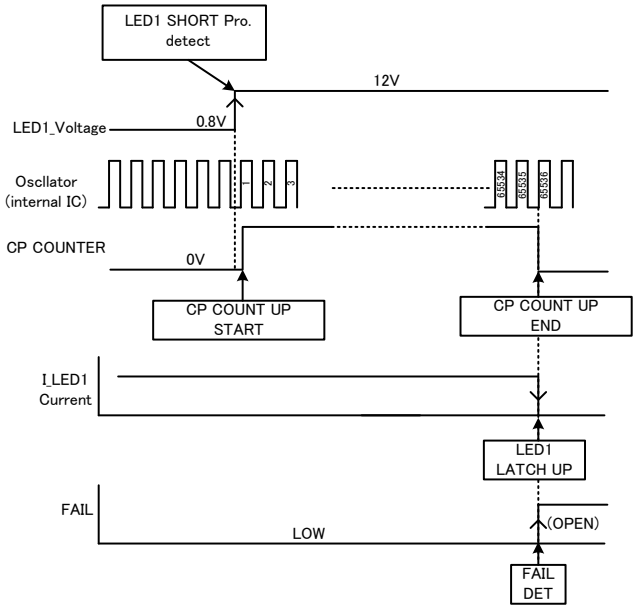

Figure 31. Timing chart of LSP time latch

© 2013 ROHM Co., Ltd. All rights reserved.

3.2 Selection of DCDC components

●OCP setting procedure/DCDC component current tolerance selection procedure

The OCP detection function that is one of the functions of the CS pin will stop the DC/DC converter operating if the CS pin voltage becomes greater than 0.4V. Consequently, it is needed to calculate a peak current flowing through the coilL and then review the resistance of RCS. Furthermore, a current tolerance for DC/DC components should be larger than that for peak current flowing through the coil L.
The following section describes the peak coil current calculation procedure, CS pin connection resistor RCS selection procedure, and DC/DC component current tolerance selection procedure

○Calculation of coil current Ipeak

Ripple voltage generated at the CS pin is determined by conditions for DC/DC application components. Assuming the conditions:
output voltage=VOUT [V]
LED total current=IOUT [A]
DCDC input voltage=VIN [V]
DCDC efficiency=η [%]
mean input current IIN required for the whole system is given by the following equation

$$I_{IN} = \frac{V_{OUT}[V] \times I_{OUT}[A]}{V_{IN}[V] \times \eta[\%]} \quad [A]$$

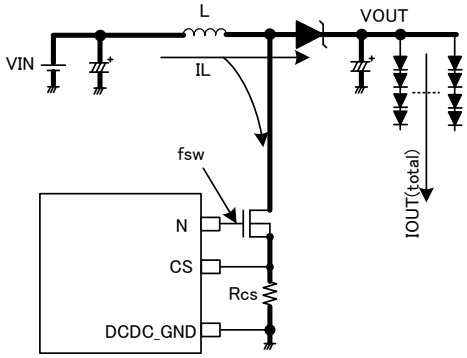

Further, according to drive operation with the DC/DC converter switching frequency fsw [Hz], inductor ripple current ΔIL [A] generated at the inductor L is given by the following equation.

$$\Delta IL = \frac{(V_{OUT}[V] - V_{IN}[V]) \times V_{IN}[V]}{L[H] \times V_{OUT}[V] \times f_{SW}[Hz]} \quad [A]$$

As a result, the peak current Ipeak of IL is given by the following equation.

$$\boxed{Ipeak = I_{IN}[A] + \frac{\Delta IL[A]}{2} \quad [A] \cdots (1)}$$

○CS pin connection resistor RCS selection procedure

The current Ipeak flows into RCS to generate voltage.(See timing chart shown to the right.)
The voltage VCSpeak is given by the following equation.

$$VCS_{peak} = Rcs \times Ipeak \quad [V]$$

If this VCSpeak voltage reaches 0.4V, DC/DC output will stop.
Consequently, to select RCS resistance, the following condition should be met.

$$\boxed{Rcs[\Omega] \times Ipeak[A] < 0.4[V]}$$

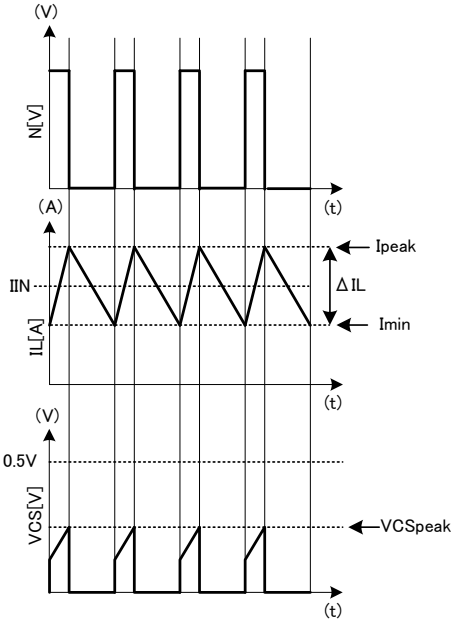

Figure32.
DCDCapplication diagram and coil current

○DCDC component current tolerance selection procedure

Iocp current needed for OCP detection voltage CS to reach 0.4V is given by the following equation

$$I_{ocp} = \frac{0.4[V]}{Rcs[\Omega]} \quad [A] \cdots (2)$$

The relation among Ipeak current (Equation (1)), Iocp current (Equation (2)),

$$\boxed{I_{peak} < I_{ocp} < \quad \text{Max. current tolerance for component}}$$

DC/DC application components including FETs, inductors, and diodes should be selected so that the Equation shown above will be met.
Furthermore, it is recommended to normally use DC/DC application components in continuous mode. Assuming that the lower limit value of coil ripple current is Imin, the following equation should be met

$$\mathrm{Im}in = I_{IN}[A] - \frac{\Delta IL[A]}{2}[A] > 0$$

A failure to meet this condition is referred to as discontinuous mode.

© 2013 ROHM Co., Ltd. All rights reserved.

○Setting example

Output voltage=VOUT [V]=40V
LED total current=IOUT [A]=120mA×6ch=0.72A
DCDC input voltage=VIN [V]=24V
DCDC efficiency=η[%]=90%
mean input current IIN required for the whole system is given by the following equation

$$I_{IN}[A] = \frac{V_{OUT}[V] \times I_{OUT}[A]}{V_{IN}[V] \times \eta[\%]} = \frac{40[V] \times 0.72[A]}{24[V] \times 90[\%]} = 1.33 \quad [A]$$

DCDC switching frequency=fsw[Hz]=200kHz
Inductor L[H]=47μH
The Inductor ripple currentΔIL[A] is:

$$\Delta IL = \frac{(V_{OUT}[V] - V_{IN}[V]) \times V_{IN}[V]}{L[H] \times V_{OUT}[V] \times f_{SW}[Hz]} = \frac{(40[V] - 24[V]) \times 24[V]}{47 \times 10^{-6}[H] \times 40[V] \times 200 \times 10^{3}[Hz]} = 1.02 \quad [A]$$

As a result, the IL peak current Ipeak is:

$$\boxed{Ipeak = I_{IN}[A] + \frac{\Delta IL[A]}{2}[A] = 1.33[A] + \frac{1.02[A]}{2} = 1.84 \quad [A]}$$

… Result of peak current calculation

When RCS resistance is set to 0.15ohm, the VCS peak voltage will be given by the following equation

$$\boxed{VCS_{peak} = Rcs \times Ipeak = 0.15[\Omega] \times 1.84[A] = 0.276[V] < 0.5V}$$

… Result of review of RCS resistance

Consequently, the result meets the condition.
Furthermore, I_{OCP} current at which OCP is detected is given by the following equation

$$I_{ocp} = \frac{0.4[V]}{0.15[\Omega]} = 2.67 \quad [A]$$

If the current tolerance for components to be used (e.g. FETs, inductors, diodes) is smaller than 2.5A,

$$\boxed{I_{peak} < I_{OCP} < \text{Max. Current tolerance for component} = 1.84[A] < 2.67[A] < 3.0[A]}$$

… Result of review of current tolerance for DC/DC components

As a result, since the condition above is met, the selection of components is accepted.
And, the lower limit of IL ripple current Imin is:

$$\mathrm{Im}\,in = I_{IN}[A] - \frac{\Delta IL[A]}{2}[A] = 1.33[A] - \frac{1.02[A]}{2} = 0.82[A] > 0$$

The system will not be put into discontinuous mode.

To select DC/DC components, please consider IC variations as well as individual component variations, andthen conduct thorough verification on practical systems.

© 2013 ROHM Co., Ltd. All rights reserved.

●**Selection of Inductor**

The value of inductor has significant influence on the input ripple current. As shown by Equation (1), the larger the inductor and the higher the switching frequency, the inductor ripple current ΔIL becomes increasingly lower.

$$\Delta IL = \frac{(V_{OUT} - V_{IN}) \times V_{IN}}{L \times V_{OUT} \times f_{SW}} [A] \quad \cdots\cdots \quad (1)$$

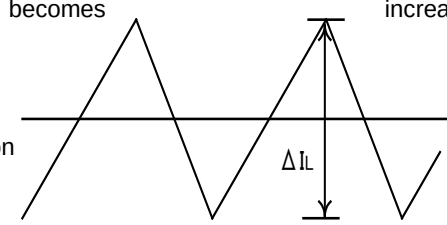

Efficiency as shown by Equation (2), peak input current is given as Equation (3).

$$\eta = \frac{V_{OUT} \times I_{OUT}}{V_{IN} \times I_{IN}} \quad \cdots\cdots \quad (2)$$

$$IL_{MAX} = I_{IN} + \frac{\Delta IL}{2} = \frac{V_{OUT} \times I_{OUT}}{V_{IN} \times \eta} + \frac{\Delta IL}{2} \quad \cdots\cdots \quad (3)$$

Here,

L : Reactance value [H]　V_{OUT} : DC/DC output voltage[V]

V_{IN} : input voltage[V]　I_{OUT} : output current(LED total current)[A]

I_{IN} : input current[A]　F_{SW} : oscillation frequency[Hz]

If a current in excess of the rated current of the inductor applies to the coil, the inductor will cause magnetic saturation, resulting in lower efficiency.

<u>Select an inductor with an adequate margin so that peak current will not exceed the rated current of the inductor.</u>

To reduce power dissipation from and increase efficiency of induct or, select an inductor with low resistance component (DCR or AC R).

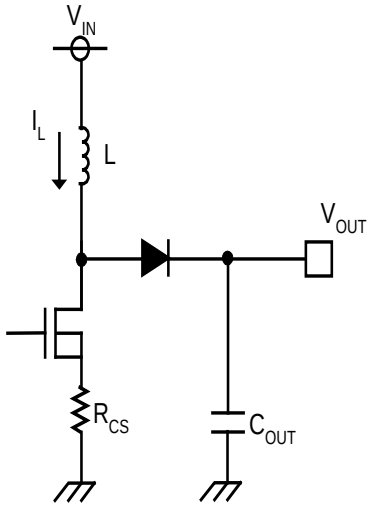

Figure33.
DCDC application circuit and coil current

●Selection of switching MOSFET transistors

There will be no problem for switching MOSFET transistors having absolute maximum rating higher than rated current of the inductor L and VF higher than "C_{OUT} breakdown voltage + Rectifier diode". However, to achieve high-speed switching, select transistors with small gate capacity (injected charge amount).

・Rated current larger than □current protection setting current is recommended

・Selecting transistors with low On resistance can obtain high efficiency.

●Selection of rectifier diodes

Select current capability higher than the rated current of the inductor L and inverse breakdown voltage higher that C_{OUT} break-down voltage, particularly having low forward voltage VF.

© 2013 ROHM Co., Ltd. All rights reserved.

3.3 Timing Chart

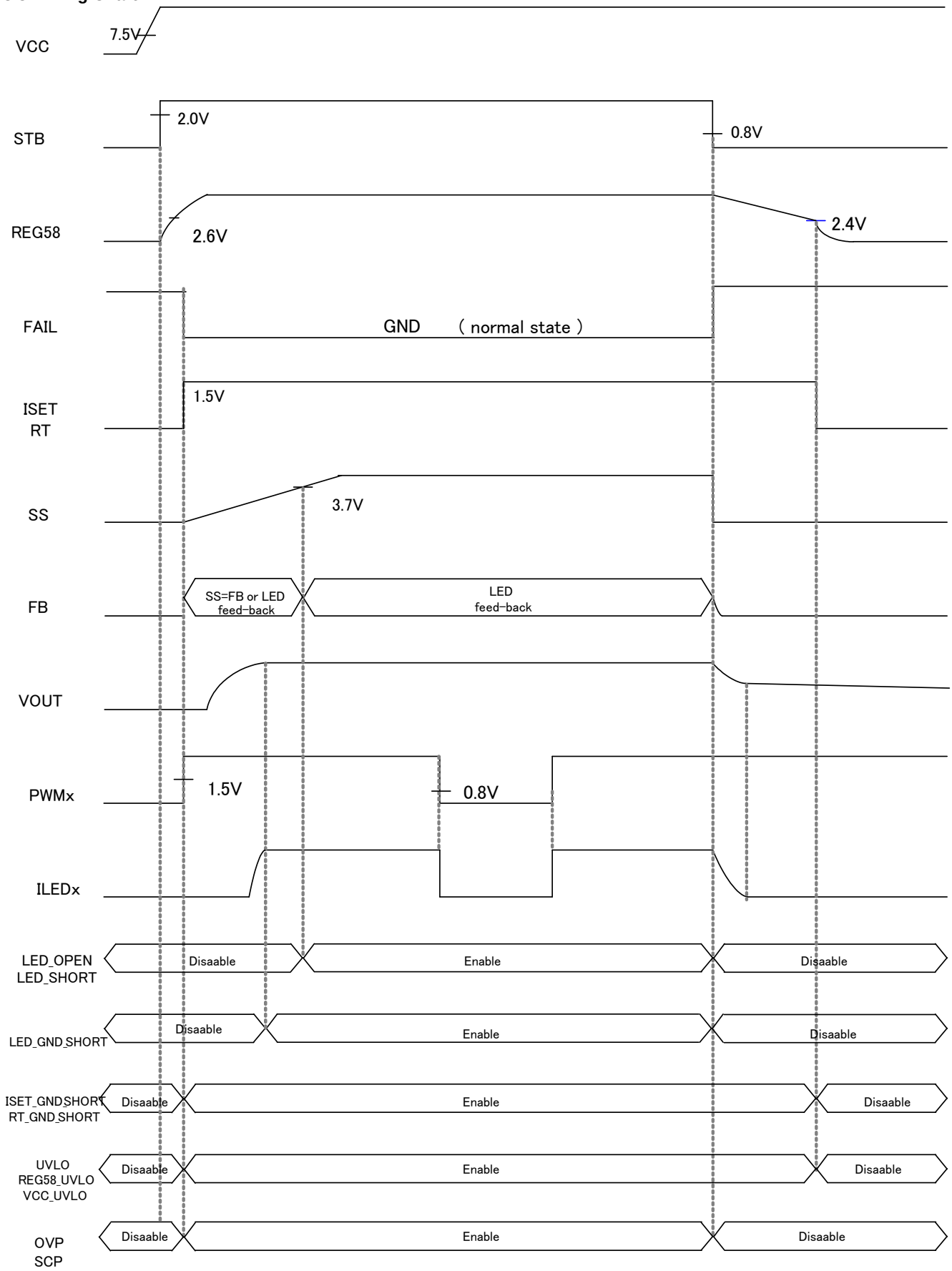

Figure 34. Timing Chart

© 2013 ROHM Co., Ltd. All rights reserved.

3.4 List of Protection Functions

●List of protection detecting condition

Protection names	Detection pin	Detection condition: Detection pin condition	Detection condition: PWM	Detection condition: SS	Release condition	Timer	Protection type
LED OPEN	LED x	LEDx < 0.20V	H	SS>3.7V	LEDx > 0.20V	2^{16} count	Latch (Only detected ch)
LEDSHORT	LED x	LEDx > 9V (LSP=OPEN)	H	SS>3.7V	LEDx < 9V (LSP=OPEN)	2^{16} count	Latch (Only detected ch)
LED GND SHORT	LED x	LEDx < 0.20V	H	SS>3.7V	LEDx > 0.20V	$2^{16} + 2^{7}$ count	Latch
ISET GND SHORT	ISET	Under ISET × 90%			Canceled ISET=GND State	Immediately detect	Auto-restart
RT GND SHORT	RT	Under RT × 90%	-	-	Canceled RT=GND State	Immediately detect	Auto-restart
UVLO	UVLO	UVLO<2.7V	-	-	UVLO>3V	Immediately detect	Auto-restart
REG58 UVLO	REG58	REG58<2.4V	-	-	REG58>2.6V	Immediately detect	Auto-restart
VCC UVLO	VCC	VCC<7.2V	-	-	VCC>7.5V	Immediately detect	Auto-restart
OVP	OVP	OVP>3.0V	-	-	OVP<2.9V	2^{18} count	Latch
SCP	OVP	OVP<0.1V	-	-	OVP>0.1V	2^{16} count	Latch
OCP	CS	OCP>0.4V	-	-	-	Immediately detect	Pulse-by-Pulse

* To clear the latch type, STB should be set to “L” once, and then to “H”
* The count of Timer means ” 1count = 1 duty of switching frequency.

●List of protection detecting operation

Protection Functions	Operation when the hysteresis type protection is detected: DC/DC	LED Driver	Soft start	FAIL pin
LED OPEN	Continues operation	Only detected LED stops operating after CP counting	Not discharged	Open after CP counting
LEDSHORT	Continues operation	Only detected LED stops operating after CP counting	Not discharged	Open after CP counting
LED GNDSHORT	Stops operating after CP counting	Stops operating after CP counting	Discharge	Open after CP counting
ISET GND SHORT	Instantaneously stops operating	Instantaneously stops operating	Not discharged	OPEN immediately
RT GND SHORT	Instantaneously stops operating	Normal Operation	Not discharged	LOW
STB	Instantaneously stops operating	Stops (and REG58<2.4V)	Discharge	OPEN immediately
UVLO	Instantaneously stops operating	Instantaneously stops operating	Discharge	OPEN immediately
REG58 UVLO	Instantaneously stops operating	Instantaneously stops operating	Discharge	OPEN immediately
VCC UVLO	Instantaneously stops operating	Instantaneously stops operating	Discharge	OPEN immediately
OVP	Stops operating after CP counting	Stops operating after CP counting	Discharge	Open after CP counting
SCP	Stops operating after CP counting	Stops operating after CP counting	Discharge	Open after CP counting
OCP	limits duty cycle	Continues operation	Not discharged	LOW

© 2013 ROHM Co., Ltd. All rights reserved.

4. Caution on use

1.) We pay utmost attention to the quality control of this product. However, if it exceeds the absolute maximum ratin gs including applied voltage and operating temperature range, it may lead to its deterioration or breakdown. Furth er, this makes it impossible to assume a breakdown state such as short or open circuit mode. If any special mod e to exceed the absolute maximum ratings is assumed, consider adding physical safety measures such as fuses.

2.) Making a reverse connection of the power supply connector can cause the IC to break down. To protect the IC f orm breakdown due to reverse connection, take preventive measures such as inserting a diode between the exter nal power supply and the power supply pin of the IC.

3.) Since current regenerated by back electromotive force flows back, take preventive measures such as inserting a c apacitor between the power supply and the ground as a path of the regenerative current and fully ensure that ca pacitance presents no problems with characteristics such as lack of capacitance of electrolytic capacitors causes a t low temperatures, and then determine the power supply line. Provide thermal design having an adequate margin in consideration of power dissipation (Pd) in the practical operating conditions.

4.) The potential of the GND pin should be maintained at the minimum level in any operating state.

5.) Provide thermal design having an adequate margin in consideration of power dissipation (Pd) in the practical oper ating conditions.
To mount the IC on a printed circuit board, pay utmost attention to the direction and displacement of the IC. Furthermore, the IC may get damaged if it is mounted in an erroneous manner or if a short circuit is established due to foreign matters entered between output pins or between output pin and power supply GND pin.

6.) Note that using this IC in strong magnetic field may cause it to malfunction.

7.) Please set the output Tr not to over absolute Maximum Ratings and ASO. CMOS IC and plural power supply IC have a possible to flow lush current momentarily. Please note VCC capacitor, VCC and GND layout.

8.) This IC has a built-in thermal-protection circuit (TSD circuit).
The thermal-protection circuit (TSD circuit) is a circuit absolutely intended to protect the IC from thermal runaway, not intended to protect or guarantee the IC. Consequently, do not use the IC based on the activation of this TS D circuit for subsequent continuous use and operation of the IC.

9.) When testing the IC on a set board with a capacitor connected to the pin, the IC can be subjected to stress. In this case, be sure to discharge the capacitor for each process. In addition, to connect the IC to a jig up to the t esting process, be sure to turn OFF the power supply prior to connection, and disconnect the jig only after turnin g OFF the power supply.

10.) This monolithic IC contains P + Isolation and P substrate layers between adjacent elements in order to keep them isolated.
P-N junctions are formed at the intersections of these P layers and the N layers of other elements, thus making up different types of parasitic elements.
For example, if a resistor and a transistor is connected with pins respectively as shown in Fig.
○When GND>(Pin A) for the resistor, or when GND>(Pin B) for the transistor (NPN), P-N junctions operate as a a parasitic diode.
○When GND>(Pin B) for the transistor (NPN), the parasitic NPN transistor operates by the N layer of other element adjacent to the parasitic diode aforementioned.
Due to the structure of the IC, parasitic elements are inevitably formed depending on the relationships of potential. The operation of parasitic diodes can result in interferences in circuit operation, leading to malfunctions and eventually breakdown of the IC. Consequently, pay utmost attention not to use the IC for any applications by which the parasitic elements are operated, such as applying a voltage lower than that of GND (P substrate) to the input pin.

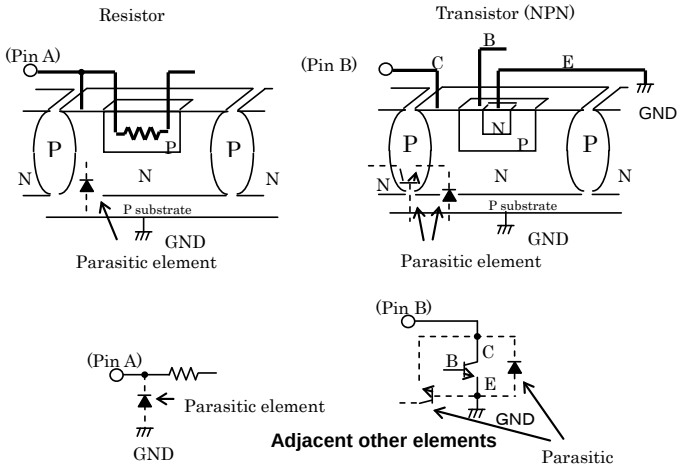

Figure 35. Example of Simple Structure of Monolithic IC

Status of this document
The Japanese version of this document is formal specification. A customer may use this translation version only for a reference to help reading the formal version.
If there are any differences in translation version of this document formal version takes priority

© 2013 ROHM Co., Ltd. All rights reserved.

●**Ordering Information**

B	D	9	4	7	0	A	F	M	E 2

- Part Number
- Package
  FM: HSOP-M
- Packaging and forming specification
  E2: Embossed tape and reel

B	D	9	4	7	0	A	E	F	V	E 2

- Part Number
- Package
  EFV: HTSSOP-B
- Packaging and forming specification
  E2: Embossed tape and reel

●Physical Dimension Tape and Reel Information

HSOP-M28

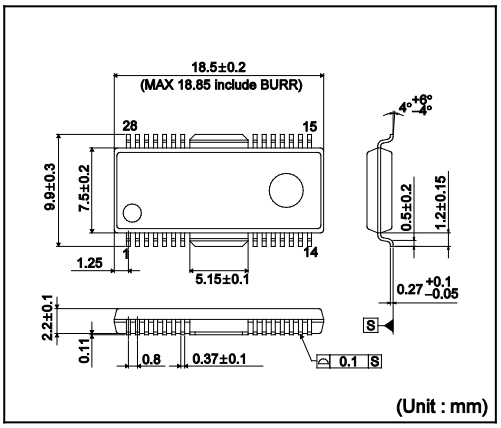

<Tape and Reel information>

Tape	Embossed carrier tape
Quantity	1500pcs
Direction of feed	E2 (The direction is the 1pin of product is at the upper left when you hold reel on the left hand and you pull out the tape on the right hand)

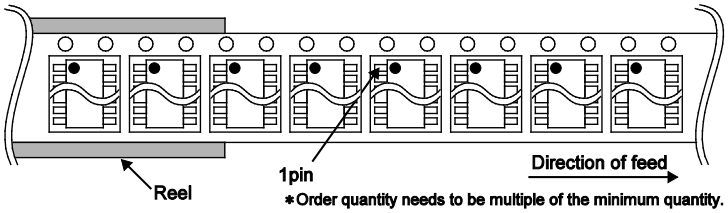

∗Order quantity needs to be multiple of the minimum quantity.

HTSSOP-B28

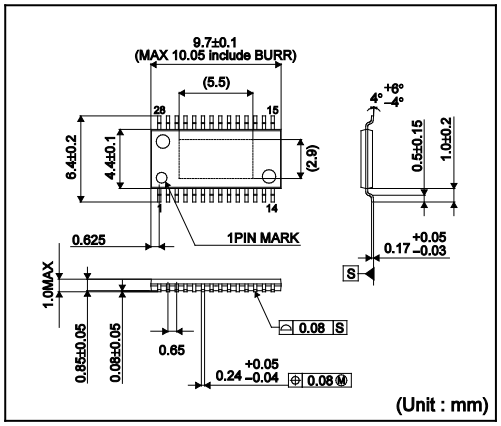

<Tape and Reel information>

Tape	Embossed carrier tape (with dry pack)
Quantity	2500pcs
Direction of feed	E2 (The direction is the 1pin of product is at the upper left when you hold reel on the left hand and you pull out the tape on the right hand)

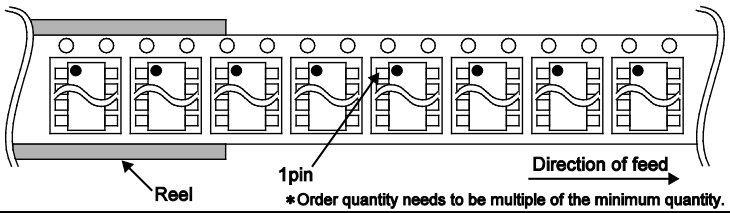

∗Order quantity needs to be multiple of the minimum quantity.

© 2013 ROHM Co., Ltd. All rights reserved.

6. Revision history

Date	Revision	Changes
26.Oct.2012	001	New Release
09.Jan.2013	002	P6 / Verified minimum ISET resistor
	002	P10 / Verified ISET terminal instruction
	002	P23 / Verified LED Current setting
19.Oct.2013	003	P2 / Change Pin Configuration
	003	P1 / Delete PbFree, RoHS
	003	ADD NOTICE

© 2013 ROHM Co., Ltd. All rights reserved.

Notice

Precaution on using ROHM Products

1. Our Products are designed and manufactured for application in ordinary electronic equipments (such as AV equipment, OA equipment, telecommunication equipment, home electronic appliances, amusement equipment, etc.). If you intend to use our Products in devices requiring extremely high reliability (such as medical equipment (Note 1), transport equipment, traffic equipment, aircraft/spacecraft, nuclear power controllers, fuel controllers, car equipment including car accessories, safety devices, etc.) and whose malfunction or failure may cause loss of human life, bodily injury or serious damage to property ("Specific Applications"), please consult with the ROHM sales representative in advance. Unless otherwise agreed in writing by ROHM in advance, ROHM shall not be in any way responsible or liable for any damages, expenses or losses incurred by you or third parties arising from the use of any ROHM's Products for Specific Applications.

(Note1) Medical Equipment Classification of the Specific Applications

JAPAN	USA	EU	CHINA
CLASSⅢ	CLASSⅢ	CLASSⅡb	CLASSⅢ
CLASSⅣ		CLASSⅢ	

2. ROHM designs and manufactures its Products subject to strict quality control system. However, semiconductor products can fail or malfunction at a certain rate. Please be sure to implement, at your own responsibilities, adequate safety measures including but not limited to fail-safe design against the physical injury, damage to any property, which a failure or malfunction of our Products may cause. The following are examples of safety measures:
   [a] Installation of protection circuits or other protective devices to improve system safety
   [b] Installation of redundant circuits to reduce the impact of single or multiple circuit failure

3. Our Products are designed and manufactured for use under standard conditions and not under any special or extraordinary environments or conditions, as exemplified below. Accordingly, ROHM shall not be in any way responsible or liable for any damages, expenses or losses arising from the use of any ROHM's Products under any special or extraordinary environments or conditions. If you intend to use our Products under any special or extraordinary environments or conditions (as exemplified below), your independent verification and confirmation of product performance, reliability, etc, prior to use, must be necessary:
   [a] Use of our Products in any types of liquid, including water, oils, chemicals, and organic solvents
   [b] Use of our Products outdoors or in places where the Products are exposed to direct sunlight or dust
   [c] Use of our Products in places where the Products are exposed to sea wind or corrosive gases, including Cl_2, H_2S, NH_3, SO_2, and NO_2
   [d] Use of our Products in places where the Products are exposed to static electricity or electromagnetic waves
   [e] Use of our Products in proximity to heat-producing components, plastic cords, or other flammable items
   [f] Sealing or coating our Products with resin or other coating materials
   [g] Use of our Products without cleaning residue of flux (even if you use no-clean type fluxes, cleaning residue of flux is recommended); or Washing our Products by using water or water-soluble cleaning agents for cleaning residue after soldering
   [h] Use of the Products in places subject to dew condensation

4. The Products are not subject to radiation-proof design.

5. Please verify and confirm characteristics of the final or mounted products in using the Products.

6. In particular, if a transient load (a large amount of load applied in a short period of time, such as pulse. is applied, confirmation of performance characteristics after on-board mounting is strongly recommended. Avoid applying power exceeding normal rated power; exceeding the power rating under steady-state loading condition may negatively affect product performance and reliability.

7. De-rate Power Dissipation (Pd) depending on Ambient temperature (Ta). When used in sealed area, confirm the actual ambient temperature.

8. Confirm that operation temperature is within the specified range described in the product specification.

9. ROHM shall not be in any way responsible or liable for failure induced under deviant condition from what is defined in this document.

Precaution for Mounting / Circuit board design

1. When a highly active halogenous (chlorine, bromine, etc.) flux is used, the residue of flux may negatively affect product performance and reliability.

2. In principle, the reflow soldering method must be used; if flow soldering method is preferred, please consult with the ROHM representative in advance.

For details, please refer to ROHM Mounting specification

© 2014 ROHM Co., Ltd. All rights reserved.

Precautions Regarding Application Examples and External Circuits

1. If change is made to the constant of an external circuit, please allow a sufficient margin considering variations of the characteristics of the Products and external components, including transient characteristics, as well as static characteristics.

2. You agree that application notes, reference designs, and associated data and information contained in this document are presented only as guidance for Products use. Therefore, in case you use such information, you are solely responsible for it and you must exercise your own independent verification and judgment in the use of such information contained in this document. ROHM shall not be in any way responsible or liable for any damages, expenses or losses incurred by you or third parties arising from the use of such information.

Precaution for Electrostatic

This Product is electrostatic sensitive product, which may be damaged due to electrostatic discharge. Please take proper caution in your manufacturing process and storage so that voltage exceeding the Products maximum rating will not be applied to Products. Please take special care under dry condition (e.g. Grounding of human body / equipment / solder iron, isolation from charged objects, setting of Ionizer, friction prevention and temperature / humidity control).

Precaution for Storage / Transportation

1. Product performance and soldered connections may deteriorate if the Products are stored in the places where:
   [a] the Products are exposed to sea winds or corrosive gases, including Cl2, H2S, NH3, SO2, and NO2
   [b] the temperature or humidity exceeds those recommended by ROHM
   [c] the Products are exposed to direct sunshine or condensation
   [d] the Products are exposed to high Electrostatic

2. Even under ROHM recommended storage condition, solderability of products out of recommended storage time period may be degraded. It is strongly recommended to confirm solderability before using Products of which storage time is exceeding the recommended storage time period.

3. Store / transport cartons in the correct direction, which is indicated on a carton with a symbol. Otherwise bent leads may occur due to excessive stress applied when dropping of a carton.

4. Use Products within the specified time after opening a humidity barrier bag. Baking is required before using Products of which storage time is exceeding the recommended storage time period.

Precaution for Product Label

QR code printed on ROHM Products label is for ROHM's internal use only.

Precaution for Disposition

When disposing Products please dispose them properly using an authorized industry waste company.

Precaution for Foreign Exchange and Foreign Trade act

Since our Products might fall under controlled goods prescribed by the applicable foreign exchange and foreign trade act, please consult with ROHM representative in case of export.

Precaution Regarding Intellectual Property Rights

1. All information and data including but not limited to application example contained in this document is for reference only. ROHM does not warrant that foregoing information or data will not infringe any intellectual property rights or any other rights of any third party regarding such information or data. ROHM shall not be in any way responsible or liable for infringement of any intellectual property rights or other damages arising from use of such information or data.:

2. No license, expressly or implied, is granted hereby under any intellectual property rights or other rights of ROHM or any third parties with respect to the information contained in this document.

Other Precaution

1. This document may not be reprinted or reproduced, in whole or in part, without prior written consent of ROHM.

2. The Products may not be disassembled, converted, modified, reproduced or otherwise changed without prior written consent of ROHM.

3. In no event shall you use in any way whatsoever the Products and the related technical information contained in the Products or this document for any military purposes, including but not limited to, the development of mass-destruction weapons.

4. The proper names of companies or products described in this document are trademarks or registered trademarks of ROHM, its affiliated companies or third parties.

© 2014 ROHM Co., Ltd. All rights reserved.

General Precaution

1. Before you use our Products, you are requested to carefully read this document and fully understand its contents. ROHM shall not be in any way responsible or liable for failure, malfunction or accident arising from the use of any ROHM's Products against warning, caution or note contained in this document.

2. All information contained in this document is current as of the issuing date and subject to change without any prior notice. Before purchasing or using ROHM's Products, please confirm the latest information with a ROHM sales representative.

3. The information contained in this document is provided on an "as is" basis and ROHM does not warrant that all information contained in this document is accurate and/or error-free. ROHM shall not be in any way responsible or liable for any damages, expenses or losses incurred by you or third parties resulting from inaccuracy or errors of or concerning such information.

© 2014 ROHM Co., Ltd. All rights reserved.