目錄 MAPX	设变内容 MODIFICATION	日期 DATE

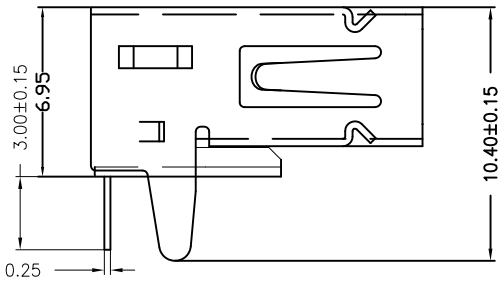

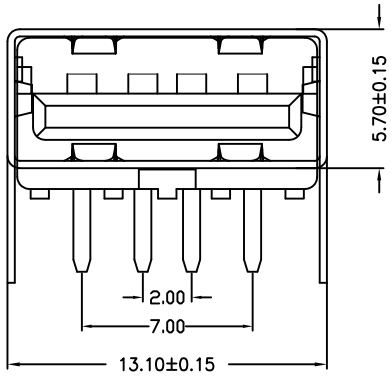

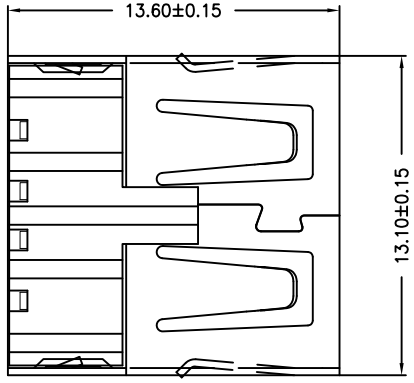

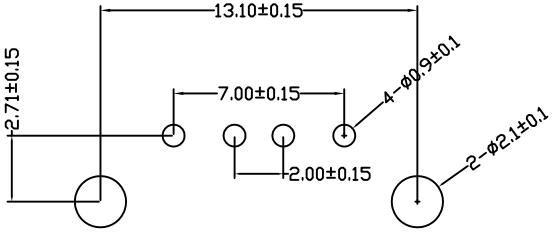

PCB LAYOUT

备注：侧弹分为外弹与内弹

NOTES:
Housing: Thermoplastics,UL94V-0
Contact: Copper Alloy
Shell: Copper Alloy/Steel
Voltage Current Rating: 1.5 AMP. 30V AC
Insulation Resistance: 1000MΩ Min.
Contact Resistance: 30 MΩ Max.
Dielectric Withstanding Voltage: 500W AC
Temperature Range: -35°C to +85°C
Insulator color: Black/White
Plastic material: PBT/LCP/Others
Shell finish: Nickel plated/Tin-Lead plated
Mechanical:
Mating Force: 3.5KG MAX
Unmating Force: 0.7 KG MIN.
Contact finish:
01: Selective Gold Flash
02: Selective Gold 3U"
03: Selective Gold 5U"
04: Selective Gold 15U"
05: Selective Gold 30U"

产品图
PRODUCT CHART DWG

公差一览表
TOLERANCE UNLESS OTHERWISE

X.	±0.25	X°.	±5°
.X	±0.20	.X°	±2°
.XX	±0.15	.XX°	±1°
.XXX	±0.10	.XXX°	±0.5°

深圳市精拓金电子有限公司

单位 UNITS	MM	制图 DRAWING	Z-Y-B	产品料号 PRODUCT PART NO.	903-241B1011D10100
比例 SCALE	1:1	审核 CHKD	雷永键	产品名称 PRODUCT NO.	AF90度无后盖直脚无边内弹铁壳反向T型PBT白胶
日期 DATE	2009/10/20	核准 APPD	雷永键	角法 VIEW	版本 VER: A0