Part Number: 0194351213
Status: Active
Overview: mx150l_sealed_connector_system
Description: MX150L™ 12 Circuit Rear Mount Flange Plug for 14-16 AWG Wire, without Gasket

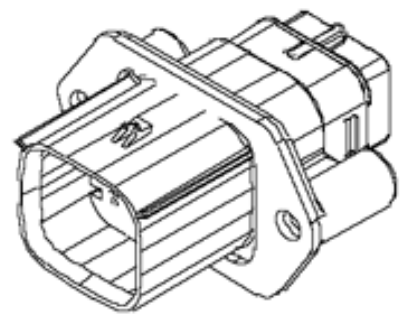

Series
image - Reference only

Documents:
3D Model
Drawing (PDF)
RoHS Certificate of Compliance (PDF)

General

Product Family	Crimp Housings
Series	19435
Comments	Mat Seal Color is Blue
Overview	mx150l_sealed_connector_system
Product Literature Order No	987650-2181
Product Name	MX150L™

Physical

Circuits (maximum)	12
Gender	Male
Glow-Wire Compliant	No
Lock to Mating Part	Yes
Number of Rows	2
Packaging Type	Bag
Panel Mount	Yes
Pitch - Mating Interface (in)	0.230 In
Pitch - Mating Interface (mm)	5.84 mm
Polarized to Mating Part	Yes
Stackable	No
Temperature Range - Operating	-40°C to +125°C

Electrical

Current - Maximum per Contact	18A

Material Info

Reference - Drawing Numbers

Packaging Specification	PK-19435-001
Sales Drawing	SD-19435-012

EU RoHS
ELV and RoHS Compliant
REACH SVHC
Not Reviewed
Halogen-Free Status
Not Reviewed

China RoHS

Need more information on product environmental compliance?

Email productcompliance@molex.com
For a multiple part number RoHS Certificate of Compliance, click here

Please visit the Contact Us section for any non-product compliance questions.

Search Parts in this Series
19435Series

Mates With
19418

Use With
19417 Male Crimp Terminals

MATERIAL NUMBER	WIRE GAGE	GASKET	KEYING OPTION	COLOR
194351211	16-14	YES	A	BLACK
194351212	22-18	YES	A	BLACK
194351213	16-14	NO	A	BLACK
194351214	22-18	NO	A	BLACK
194351216	16-14	YES	B	GRAY
194351217	22-18	YES	B	GRAY
194351218	16-14	NO	B	GRAY
194351219	22-18	NO	B	GRAY
194351221	16-14	YES	C	BROWN
194351222	22-18	YES	C	BROWN
194351223	16-14	NO	C	BROWN
194351224	22-18	NO	C	BROWN
194351226	16-14	YES	D	GREEN
194351227	22-18	YES	D	GREEN
194351228	16-14	NO	D	GREEN
194351229	22-18	NO	D	GREEN

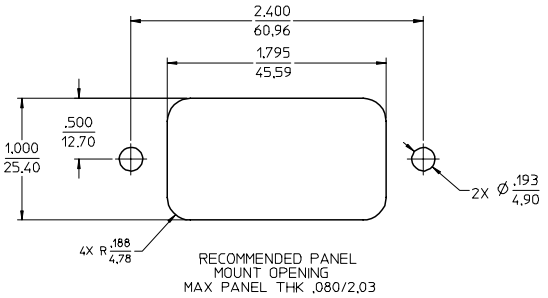

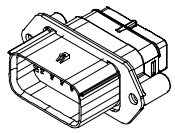

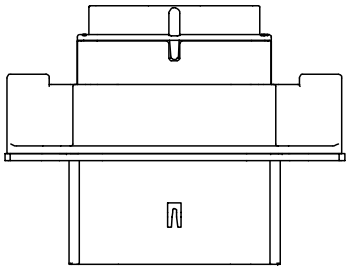

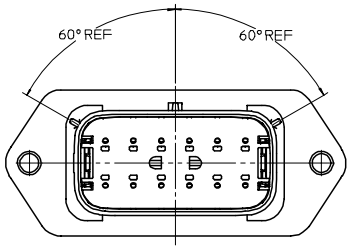

KEY A

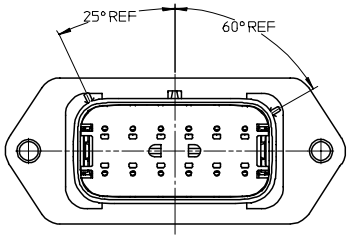

KEY B

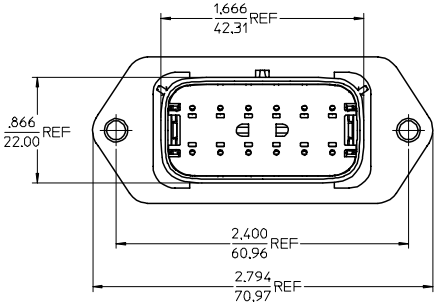

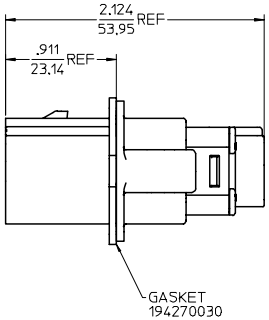

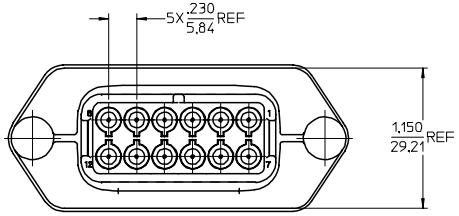

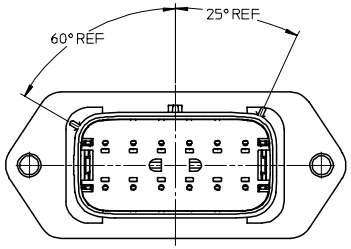

KEY C

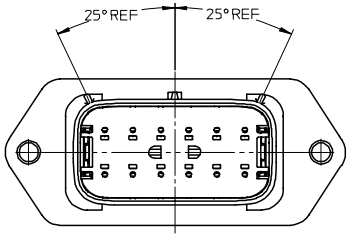

KEY D

NOTES:

1. MATERIALS:
   HOUSING: POLYESTER (PBT), GLASS FILLED, UL94 V-0,
   COLOR: SEE CHART.
   SEAL & GASKET: SILICONE RUBBER.
2. PRODUCT SPECIFICATION: PS-19417-001.
3. PACKAGING SPECIFICATION: PK-19419-001.
4. MATES WITH: 19418 SERIES RECEPTACLE ASSEMBLIES.
5. RECOMMENDED MOUNTING HARDWARE: (2)#10 X .62/18.9 LONG PLASTIC
   THREAD CUTTING SCREWS. RECOMMENDED TORQUE 15-17 IN-LBS.
   SUGGESTED SOURCE: ITW SHAKEPROOF INDUSTRIAL BOSSCREW OR EQUIVALENT.

NEW PRODUCT
EC NO: ETC2005-0228
DRWN: JPAWLICK 2005/06/20
CHKD: JPAWLICK 2005/06/21
APPR: RDEROSS 2005/06/21
DESCRIPTION
REV A

QUALITY SYMBOLS
▼=0
▽=0

GENERAL TOLERANCES (UNLESS SPECIFIED)

	mm	INCH
4 PLACES	± ---	± ---
3 PLACES	± ---	± .015
2 PLACES	± 0.38	± ---
1 PLACE	± ---	± ---
ANGULAR ± 2 °		

DRAFT WHERE APPLICABLE MUST REMAIN WITHIN DIMENSIONS

DIMENSION STYLE: IN/MM
SCALE: 2:1
DESIGN UNITS: INCH
THIRD ANGLE PROJECTION

DRAWN BY: JPAWLICKI DATE: 02/09/05
CHECKED BY: JPAWLICKI DATE: 02/10/05
APPROVED BY: RDEROSS DATE: 02/11/05

TITLE: 12 WAY SEALED PLUG PANEL MOUNT ASSEMBLY, 22-14 AWG, A-D POLARIZATION

molex MOLEX INCORPORATED

MATERIAL NO.: SEE CHART
DOCUMENT NO.: SD-19435-012
SHEET NO.: 1 OF 1
SIZE: D

THIS DRAWING CONTAINS INFORMATION THAT IS PROPRIETARY TO MOLEX INCORPORATED AND SHOULD NOT BE USED WITHOUT WRITTEN PERMISSION

tb_frame_D_P_AM_T
Rev. D 2004/06/28