Description

HT2801S is high performance primary sensing regulation and monolithic switching-mode power controller which is designed for small- power supply equipment with current mode control. Built- in accurate CV/CC control circuit. High integration design, a high performance power BJT and PFM controller and full protection circuits in single chip, to minimize external components and save the cost effectively. HT2801S can be simply designed a typical flyback switch converter, the unique driving technology promotes the characteristics of withstand voltage and achieves excellent converting efficiency

.

Fig. 1. CC vs CV Curve (Typ.)

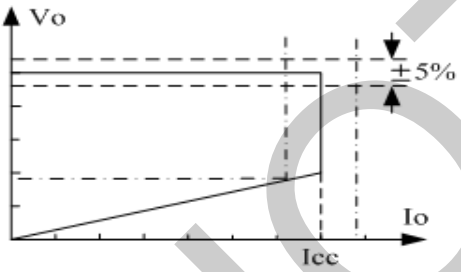

Features

- Built- in 800V power BJT
- PSR control, eliminates Opto- coupler and TL431
- Accurate CV/CC control
- Hysteresis over- temperature protection (OTP) circuit
- High efficiency and meet Level 6 efficiency standards
- Output voltage protection (OVP/UVLO)
- < 100 mW no- load consumption
- Auto- Restart function
- Ultra-low start-up current
- Good EMC characteristic allows the simple EMC circuit

Application

- Handset/ Mobile Phone Chargers
- DSC/ Tablet Chargers
- Power Adaptors with limited output power

Typical Application Circuitry

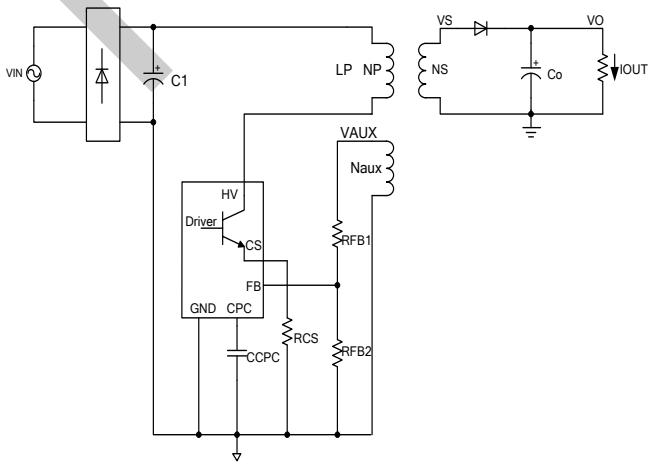

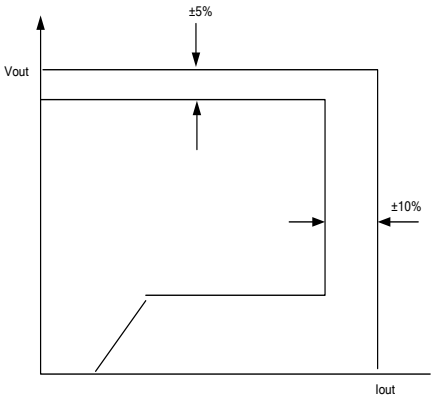

OUTput CC/CV VI Characteristic

HOTCHIP

Pin Configuration

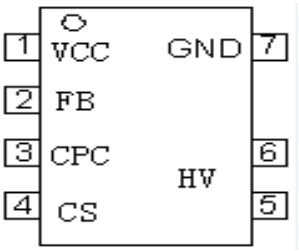

Pin Configuration

Pin #	Pin Name	Description
1	**VCC**	Power Supply Pin of IC. An external filter capacitor of Low ESR electrolytic capacitor is suggested to gain stable supply voltage .
2	**FB**	Output Feedback Pin to detect output condition through the auxiliary winding voltage of the transformer
3	**CPC**	Connected with a 100+nf capacitor, CPC Pin becomes output cable drop- out compensation Pin.
4	**CS**	Connect external primary current sensing resistor (R_{CS}), IC can detect primary current via external sensing resistor. When voltage on the resistor surpasses maximum value, internal Power BJT will be turned off immediately
5- 6	**HV**	The Collector of internal Power Transistor
7	**GND**	Ground Pin

Internal Function Block Diagram

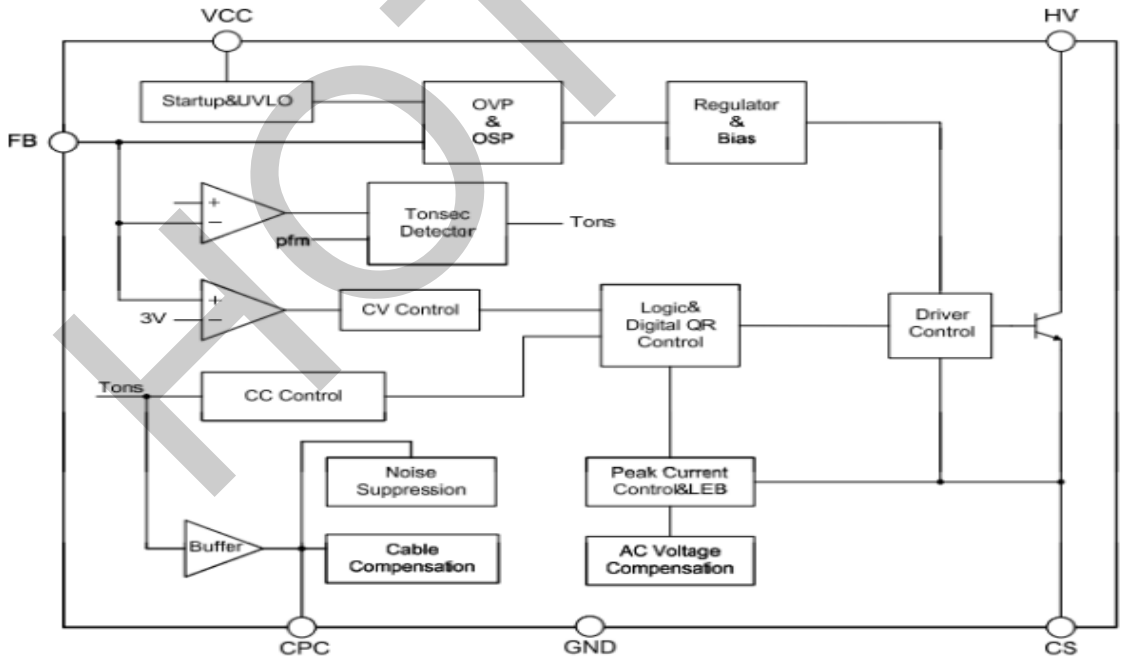

HOTCHIP

Absolute Maximum Ratings

V_{CBO} of Internal Transistor	800V
IC Peak Current:	350mA
VCC Pin Voltage	8.6V
FB Pin Voltage	7V
Others Pin Voltage	Vcc+0.3V
Operating Temperature (Tj)	0~ +150℃
Storage Temperature	-55~ +150℃
Lead Temperature	+260℃/ 10S
ESD (Human Body Mode)	3000V

Note 1: Stresses beyond those listed under "absolute maximum ratings" may cause permanent damage to the device. Under "recommended operating conditions" the device operation is assured, but some particular parameter may not be achieved.

Electrical Characteristics

Parameter	Symbol	Conditions	Min.	Typ.	Max	Unit
V_{DD} UVLO Section						
Start- up Voltage	V_{CC}-ON	-	7.5	8.0	8.8	V
Shut down	V_{CC}-OFF	-	3.0	3.3	3.5	V
Star-up Current	I_{START}	-	-	0.2	1	uA
Operating Current	I_{CC}		-	400	500	uA
Max. Operating Voltage	V_{CC}	-	-	-	8.5v	
Current Sense Section						
Maximum Current to CS PIN	I_{CS}	-	3.4	4	5	uA
Current Sense Threshold Voltage	V_{CS}				510	mV
Leading Edge Blanking	T_{LEB}	Ic＝1mA		500	-	nS
Feedback Input Section						
FB Reference Voltage	V_{REF-FB}		2.85	2.9	2.95	V
Input Resistance of FB Pin	R_{FB}		1.2	1.5	2	MΩ
Feedback Threshold Voltage	V_{FB}				5	V
Internal Transistor						
Collector- Emitter Saturation Voltage	V_{CEO}	Io＝1.0mA			0.3	V
Collector- Base Voltage	V_{CBO}		800			V
OVER TEMPERATURE PROTECTION(OTP)						
Shutdown Temperature	TSHDN		135	140	145	℃
Temperature Hysteresis	THYS		125	130	135	℃

HOTCHIP

Function Description

HT2801S is specially designed for the charger/adapter of small power digital products. To use PSR control technology to provide accurate (CV/CC) characteristics. The controller works in PFM mode and the switching frequency can be automatically adjusted as per the load. Optimized driving circuit greatly promotes withstand voltage of the power BJT and minimizes the switching loss, so as to make the circuit have excellent converting efficiency

Constant Voltage Operation (CV)

When the circuit is operates in CV area, FB will detect the output voltage when the power BJT turn-off through the sensing voltage by auxiliary winding of the transformer, to make the output voltage stabilized in the fixed value. In the turn-on period of the output rectifier diode D, it's given the output winding voltage and auxiliary winding voltage as follows

$$V_{AUX} = \frac{N_{AUX}}{N_S} \cdot (Vo + V_d)$$

(Where Vaux：auxiliary winding voltage； Nb：subsidiary winding turns； NS: output winding turns；Vd：forward voltage drop of output rectifier diode)

FB will test the auxiliary winding voltage while the power BJT off-time to regulate the output voltage. In order to avoid the peak influence happens in power BJT turn-off resulting from the leakage inductance of the transformer, and considering the accuracy of sampling voltage, FB captures the auxiliary winding detection sampling points as below:

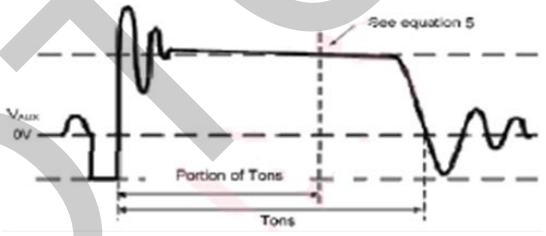

Constant Current Operation (CC)

HT2801S CC control circuit is requested the converter to operate in DCM. In CC operation mode, control circuit will fix the proportion between the Tons and Toffs generated by rectifier Diode. During Tons time, the primary energy of the transformer will be converted to the secondary winding, via the rectifier diode then charge the output capacitor and supply load simultaneously.

During Toffs period, the primary coil stores the energy, the output filter capacitor makes load discharge. In CC operation area, HT2801S switch frequency will follow the output load direct ratio control detected by FB Voltage

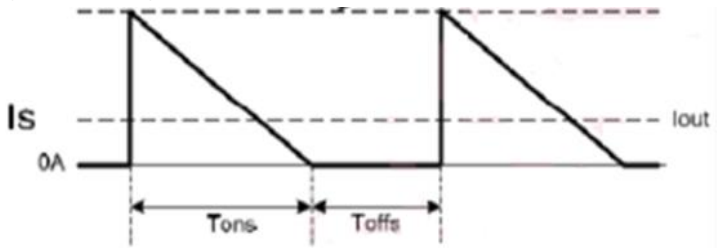

The secondary rectifier diode peak current is determined by the peak current of primary- side

inductance which also affects the output current. The corresponding relation between the primary peak current and the secondary peak current is as follows--

$$Ipks = \frac{N_P}{N_S} \cdot Ipk$$

(Where I_{PK}: primary peak current ; NP: primary winding turns; NS: secondary winding turns; I_{PKS} :secondary peak current)

And primary inductance peak current is determined by Pin 4 to RCS resistance, the primary inductance peak current and RCS resistance are in inverse proportion, so only need to adjust CS resistance to achieve different output currents. Output current Iout and Primary Current is given by the following equation--

$$Iout = \frac{1}{2} \cdot Ipks \cdot \frac{Tons}{Tons + Toffs}$$

(Where Iout: Output current; Tons: secondary rectifier diode on-time; Toffs: secondary rectifier diode off-time)

Cable Drop- out Compensation

HT2801S is featured with output cable drop- out compensation circuit. When it outputs with different loads, this certain circuitry compensates cable voltage which is in fixed proportion with output voltage. The internal circuit will generate one cable drop compensation signal once a capacitor of 100nF is connected with CPC Pin

Protection Function

To assure a safe and reliable circuit in all application, HT2801S features multiple protection circuits covering OCP, OVP, FB open-loop protection etc. as integration. Once abnormality is been defected, Protection mode of all kinds is therefore triggered.

Note: Referential Replacement Circuitry of typical RCC Circuit

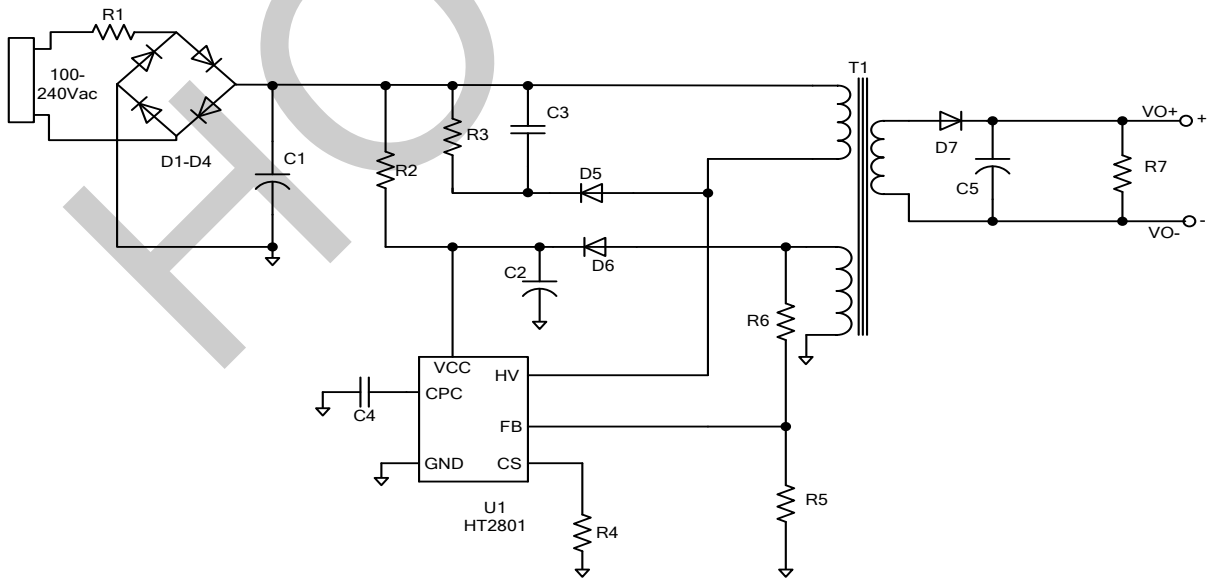

HOTCHIP

Package Outline Dimension

SOP- 7L

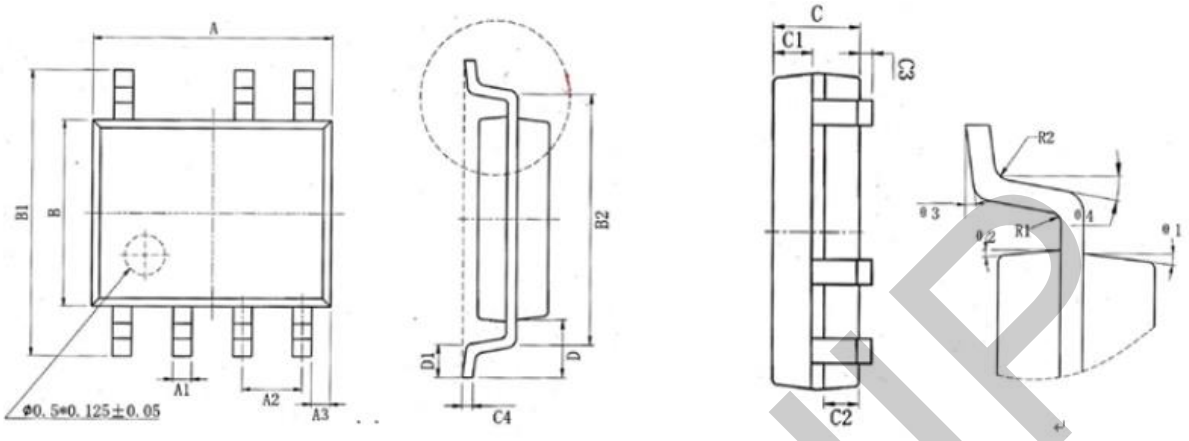

Item \ Size	Min. (mm)	Max(mm)	Item \ Size	Min. (mm)	Max. (mm)
A	4.80	5.00	C3	0.05	0.20
A1	0.356	0.456	C4	0.203	0.233
A2	1.27TYP		D	1.05TYP	
A3	0.345TYP		D1	0.40	0.80
B	3.80	4.00	R1	0.20TYP	
B1	5.80	6.20	R2	0.20TYP	
B2	5.00TYP		θ1	17° TYP4	
C	1.45	1.55	θ2	13° TYP4	
C1	0.55	0.65	θ3	0° ~ 8°	
C2	0.55	0.65	θ4	4° ~ 12°	

Marking & Ordering Information

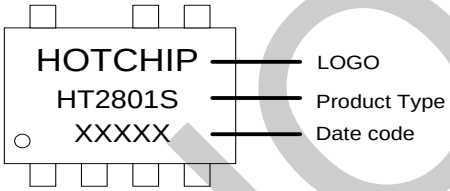

Package	Top Marking	Ordering
SOP7 Pb-free	HT2801S	HT2801S

IMPORTANT NOTICE

- HOTCHIP reserves the right to alter its products without prior notification. For the most up-to-date information, please visit our web site at http://www.hotchip.com.cn.
- HOTCHIP assumes no liability for the issues about the industrial standard, licenses and the right of the third party caused by the electric circuit and chart. The schematic is just for typical application, is not for the specialized mass production application.
- The export authorization from government is needed when the product or its derivative product do not agree with the Wassenaar Arrangement or other international agreement.
- Any copy of these information without our permission to print for other uses is forbidden.
- HOTCHIP's products are not authorized for use as critical components in life support devices or systems, such as motion machine, medical machine, security system, gas equipment, airplane or any other conveyance.
- HOTCHIP cannot avoid fault or losing efficacy, though we will do the best to improve the quality and reliability. The customers use the products should go through the security design, such as the redundant design, fire protection design, failure protection about the secondary disasters, fire or other related damage.
- HOTCHIP will continuously provide better products for the customers by all our heart.

HOTCHIP