# H Series Crystal

- **6.0mm x 3.5 mm x1.2mm Ceramic Package**
- **Tight Tolerance and Stability**
- **Wide Frequency Range**
- **Tape and Reel Packaging**

## ELECTRICAL SPECIFICATIONS:

| | |
|---|---|
| Frequency Range | 8.000MHZ to 100.000MHZ |
| Frequency Tolerance / Stability | (See Part Number Guide for Options) |
| Operating Temperature Range | (See Part Number Guide for Options) |
| Storage Temperature | -40°C to +85°C |
| Aging | ±5ppm per year max |
| Shunt Capacitance | 7pF max |
| Load Capacitance | 20pF Standard<br>(See Part Number Guide for Options) |
| Equivalent Series Resistance | See ESR Chart |
| Mode of Operation | Fundamental / 3rd OT |
| Drive Level | 100µW max |
| Insulation Resistance | 500 M ohms min at 100VDC ±15VDC |
| Shock | MIL-STD-883, Meth 2002, Cond B |
| Solderability | MIL-STD-883, Meth 2003 |
| Solvent Resistance | MIL-STD-202, Meth 215 |
| Vibration | MIL-STD-883, Meth 2007, Cond A |
| Gross Leak Test | MIL-STD-883, Meth 1014, Cond C |
| Fine Leak Test | MIL-STD-883, Meth 1014, Cond A |

## ESR CHART:

| Frequency Range | ESR (Ohms) | Mode / Cut |
|---|---|---|
| 8.000MHZ to 10.999MHZ | 100 max | Fund / AT |
| 11.000MHZ to 11.999MHZ | 80 max | Fund / AT |
| 12.000MHZ to 15.999MHZ | 60 max | Fund / AT |
| 16.000MHZ to 39.999MHZ | 40 max | Fund / AT |
| 40.000MHZ to100.000MHZ | 70 max | 3rd OT/ AT |

## MARKING:

Line 1: MXX.XXX
XX.XXX = Frequency in MHz

Line 2: SYMCCL
S = Internal Code
YM = Date Code (Year/Month)
CC = Crystal Parameters Code
L = Denotes RoHS Compliant

## MECHANICALS DETAIL:

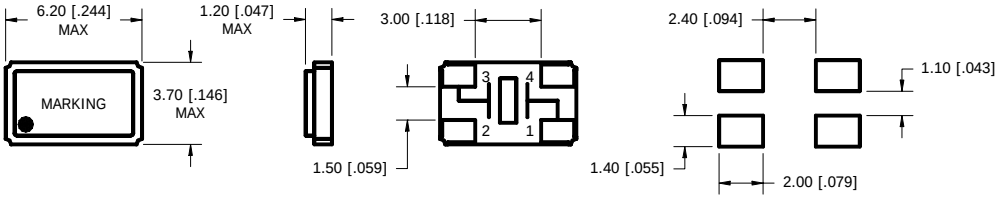


| PIN CONNECTIONS | |
|---|---|
| PIN 1 | CRYSTAL |
| PIN 2 | CASE GROUND |
| PIN 3 | CRYSTAL |
| PIN 4 | CASE GROUND |

Dimension in Brackets are in Inches

Recommended Land Pattern

## PART NUMBER GUIDE:

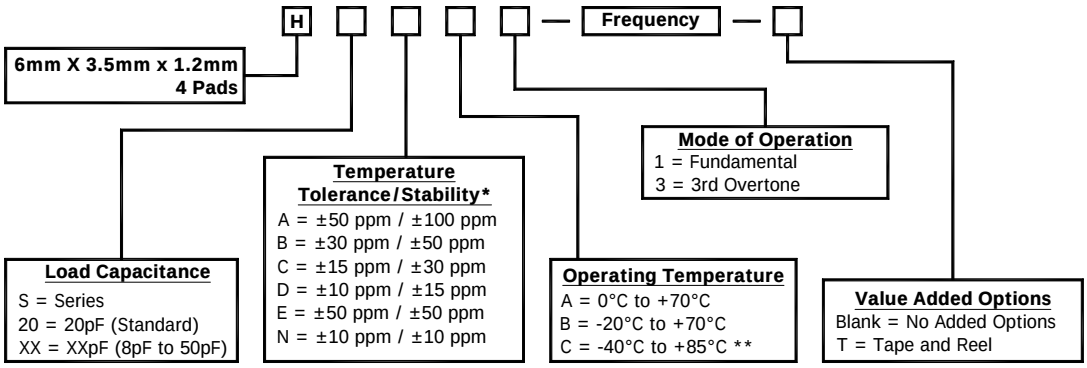


* Please consult with MMD sales department for any other parameters or options.
** Not all Frequency Tolerance/Stability options available at this temperature range.


**MMD Components**, 30400 Esperanza, Rancho Santa Margarita, CA, 92688
Phone: (949) 709-5075, Fax: (949) 709-3536, www.mmdcomp.com
Sales@mmdcomp.com