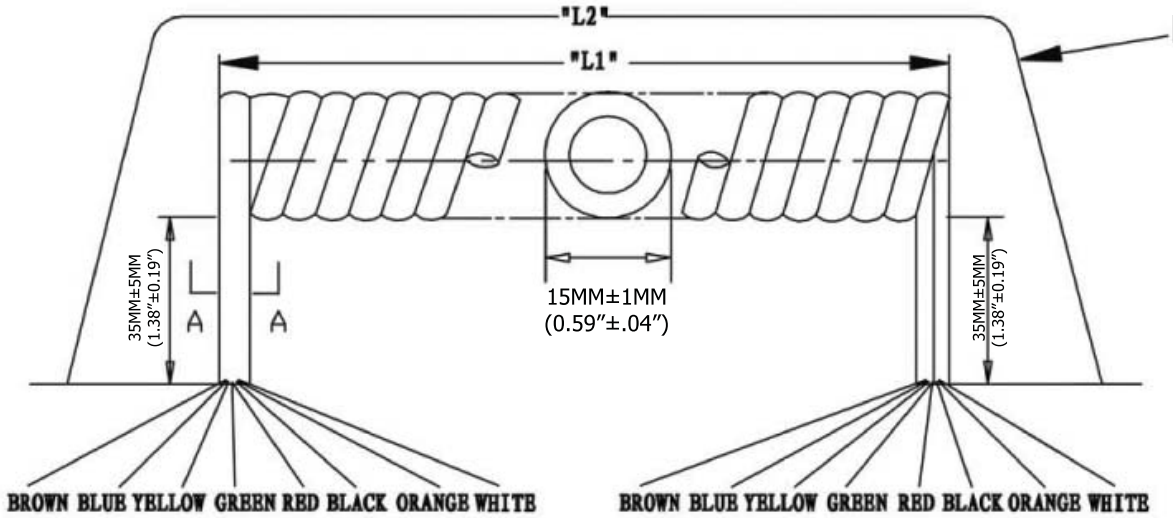

Extended length is with 500g of force

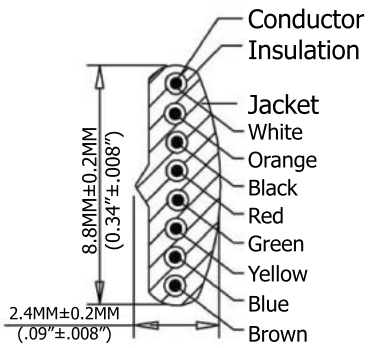

SEC: A=A

Material:

- Conductor(X4C): 26AWG (0.12X12) Bare Copper
- Insulation(X43): PP6331 ID 0.95-1.0
- Jacket: PVC NOUL 80P
- Package: Individual PE Bag

Electrical:

- Voltage rating: 30V (DC)

Extended Length ("L2")	Typical Retracted Length ("L1")
168.0 Inches - 193.2 Inches	78.0 Inches
4,267.2MM - 4,907.28MM	1,905.0MM

Scale	1:1						Name
TOLERANCE							
X.X	±0.40			Drawn	11.21.11	Chappell	
X.XX	±0.25			Approved			
X.XXX	±0.15						
Angle	±3°						
			Modification	Date	Name		

Item No.

AT-K-C-26-8-W/25-R

Title

NON-UL 26AWG (0.16/7)*8C, O.D.: 2.4*8.8MM, Pre-Cut, 25 Ft., White

Drawing No.

rev00

Replace

Sheet

RoHS Complaint

ASSMANN WSW components