Lighting Management Unit With High-Voltage Boost Converter With up to 150-mA Serial Flash LED Driver

Check for Samples: LP5526

FEATURES

- **High-Efficiency Boost Converter With Programmable Output Voltage up to 20V**
- **Two Individual Drivers for Serial Display Backlight LEDs**
- **Automatic Dimming Controller**
- **Standalone RGB Controller**
- **Dedicated Flash Function**
- **Safety Function to Avoid Prolonged Flash**
- **Three General-Purpose IO Pins**
- **25-Bump DSBGA Package: (2.54mm x 2.54mm x 0.6mm)**

APPLICATIONS

- **Cellular Phones and PDAs**
- **MP3 Players**
- **Digital Cameras**

DESCRIPTION

LP5526 is a Lighting Management Unit for portable applications. It is used to drive display backlights, keypad LEDs, RGB LEDs and camera flash LEDs. LP5526 can drive 2 separately connected strings of LEDs with high voltage boost converter. The RGB driver allows driving either individual color LEDs or RGB LED from separate supply power, or it can be used to drive series connecter flash LEDs from high voltage boost converter.

The backlight drivers (MAIN and SUB pins) are both high resolution constant current mode drivers. The flash outputs can drive series connected flash LED with up to 150mA of current. External PWM control can be used for dimming any selected LED outputs or it can be used to trigger the flash. The flash has also 1-second safety timer.

The device is controlled through a 2-wire low-voltage I^2C compatible interface that reduces the number of required connections.

Typical Applications

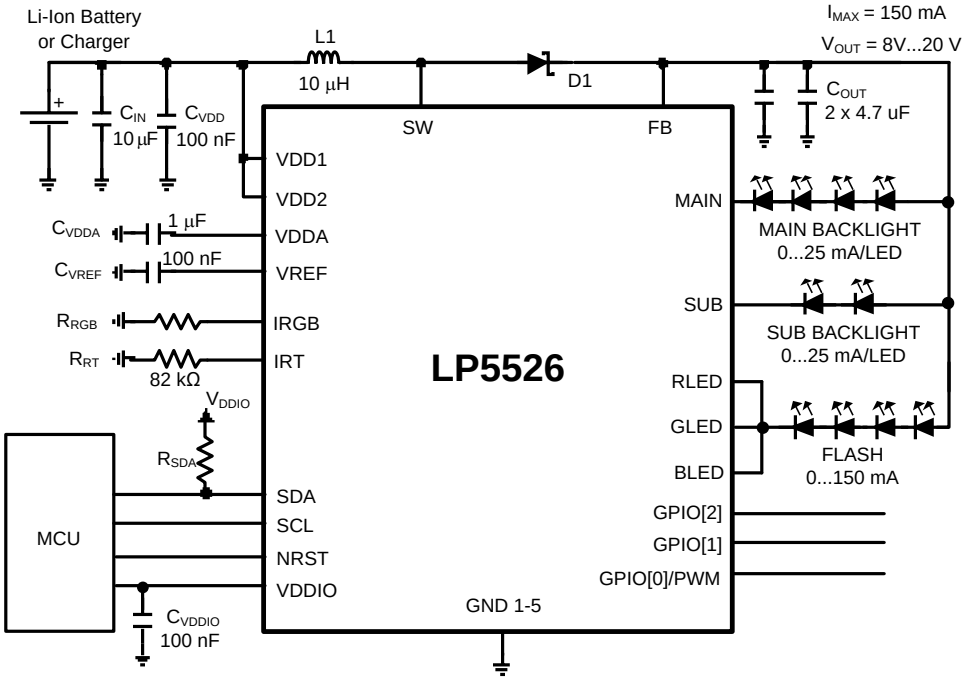

Figure 1.

Please be aware that an important notice concerning availability, standard warranty, and use in critical applications of Texas Instruments semiconductor products and disclaimers thereto appears at the end of this data sheet.

All trademarks are the property of their respective owners.

PRODUCTION DATA information is current as of publication date. Products conform to specifications per the terms of the Texas Instruments standard warranty. Production processing does not necessarily include testing of all parameters.

Copyright © 2006–2013, Texas Instruments Incorporated

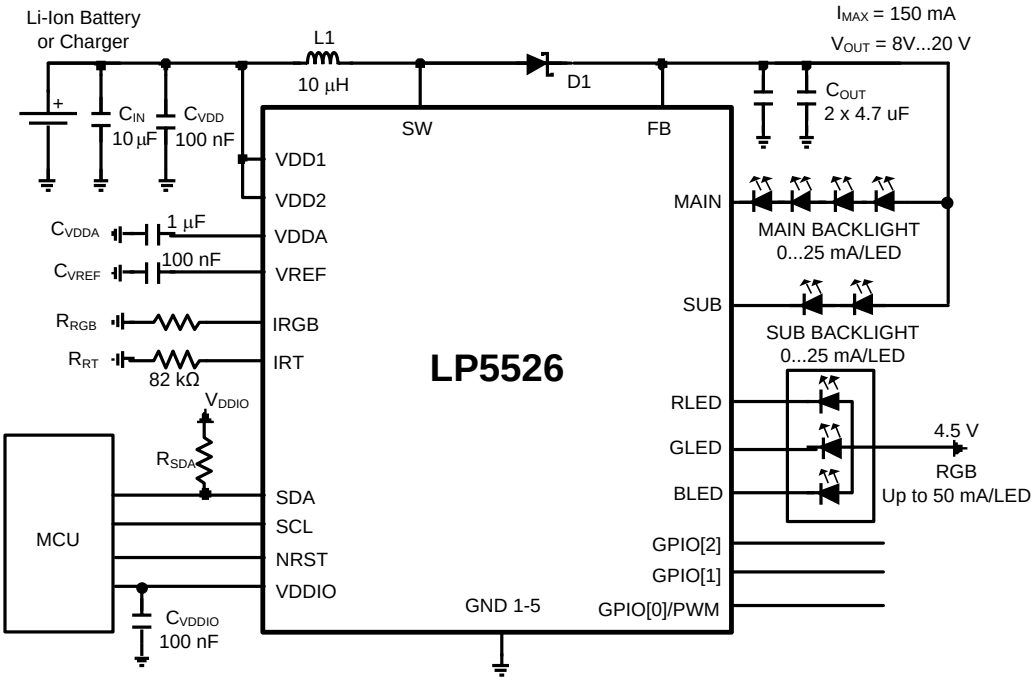

Figure 2.

Copyright © 2006–2013, Texas Instruments Incorporated

Connection Diagrams

25-Bump Thin DSBGA Package, Large Bump, Package Number YZR0025CCA

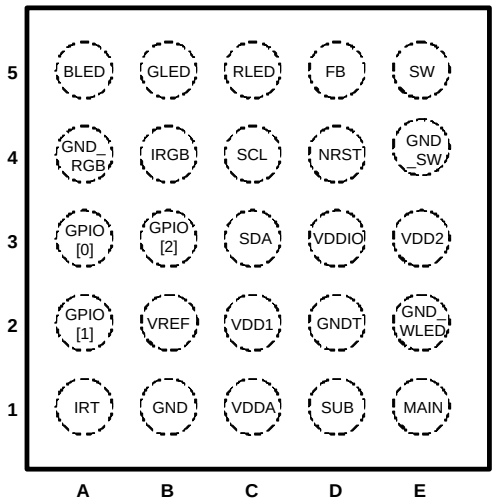

Figure 3. Top View

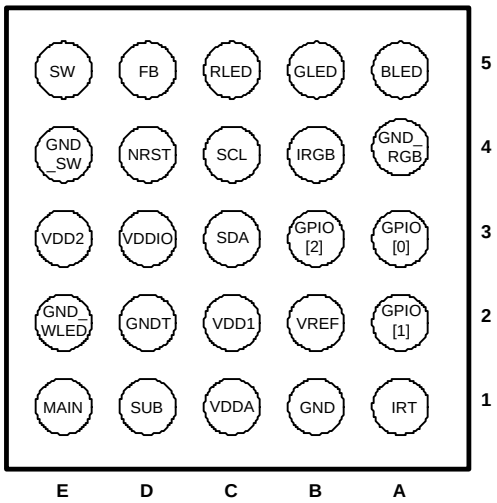

Figure 4. Bottom View

Table 1. Pin Descriptions

Pin #	Name	Type	Description
5E	SW	Output	Boost Converter Power Switch
5D	FB	Input	Boost Converter Feedback
5C	RLED	Output	Red LED Output (Current Sink / Open Drain Switch)
5B	GLED	Output	Green LED Output (Current Sink / Open Drain Switch)
5A	BLED	Output	Blue LED Output (Current Sink / Open Drain Switch)
4E	GND_SW	Ground	Power Switch Ground
4D	NRST	Input	External Reset, Active Low
4C	SCL	Logic Input	Clock Input for I^2C Compatible Interface
4B	IRGB	Input	External RGB LED Maximum Current Set Resistor
4A	GND_RGB	Ground	Ground for RGB LED Currents
3E	VDD2	Power	Supply Voltage 3.0...5.5 V
3D	VDDIO	Power	Supply Voltage for Digital Input/Output Buffers and Drivers
3C	SDA	Logic Input/Output	Data Input/Output for I^2C Compatible Interface
3B	GPIO[2]	Logic Input/Output	General Purpose Logic Input/Output
3A	GPIO[0] / PWM	Logic Input/Output	General Purpose Logic Input/Output / External PWM Input
2E	GND_WLED	Ground	Ground for White LED Currents (MAIN and SUB Outputs)
2D	GNDT	Ground	Ground
2C	VDD1	Power	Supply Voltage 3.0...5.5 V
2B	VREF	Output	Reference Voltage (1.23V)
2A	GPIO[1]	Logic Input/Output	General Purpose Logic Input/Output
1E	MAIN	Output	MAIN Display White LED Current Output (Current Sink)
1D	SUB	Output	SUB Display White LED Current Output (Current Sink)
1C	VDDA	Output	Internal LDO Output (2.80V)
1B	GND	Ground	Ground for Core Circuitry
1A	IRT	Input	Oscillator Frequency Set Resistor

Copyright © 2006–2013, Texas Instruments Incorporated

These devices have limited built-in ESD protection. The leads should be shorted together or the device placed in conductive foam during storage or handling to prevent electrostatic damage to the MOS gates.

Absolute Maximum Ratings[1][2]

V (SW, FB, MAIN, SUB, RLED, GLED, BLED)		-0.3V to +23V
V_{DD1}, V_{DD2}, V_{DDIO}, V_{DDA}		-0.3V to +6.0V
Voltage on I_{RGB}, I_{RT}, V_{REF}		-0.3V to V_{DD1}+0.3V with 6.0V max
Voltage on Logic Pins		-0.3V to V_{DDIO} +0.3V with 6.0V max
I (V_{REF})		10µA
I(RLED, GLED, BLED)		100mA
Continuous Power Dissipation [3]		Internally Limited
Junction Temperature (T_{J-MAX})		125ºC
Storage Temperature Range		-65ºC to +150ºC
Maximum Lead Temperature (Soldering)[4]		260ºC
ESD Rating	Human Body Model[5]	2kV
	Machine Model	200V

(1) Absolute Maximum Ratings indicate limits beyond which damage to the component may occur. Operating Ratings are conditions under which operation of the device is ensured. Operating Ratings do not imply ensured performance limits. For ensured performance limits and associated test conditions, see the Electrical Characteristics tables.
(2) If Military/Aerospace specified devices are required, please contact the TI Sales Office/Distributors for availability and specifications.
(3) Internal thermal shutdown circuitry protects the device from permanent damage. Thermal shutdown engages at T_J=150ºC (typ.) and disengages at T_J=130ºC (typ.).
(4) For detailed soldering specifications and information, please refer to Application Note AN1112 : Micro SMD Wafer Level Chip Scale Package SNVA009
(5) The Human body model is a 100pF capacitor discharged through a 1.5kΩ resistor into each pin. The machine model is a 200pF capacitor discharged directly into each pin. MIL-STD-883 3015.7

Operating Ratings[1] [2]

V (SW, FB, MAIN, SUB)	0 to +21V
$V_{DD1,2}$	3.0 to 5.5V
V_{DDIO}	1.65V to V_{DD1}
Recommended Load Current (RLED, GLED, BLED) CC Mode	0mA to 50mA/driver
Recommended Total Boost Converter Load Current	0mA to 150mA
Junction Temperature (T_J) Range	-30ºC to +125ºC
Ambient Temperature (T_A) Range [3]	-30ºC to +85ºC

(1) Absolute Maximum Ratings indicate limits beyond which damage to the component may occur. Operating Ratings are conditions under which operation of the device is ensured. Operating Ratings do not imply ensured performance limits. For ensured performance limits and associated test conditions, see the Electrical Characteristics tables.
(2) All voltages are with respect to the potential at the GND pins.
(3) Junction-to-ambient thermal resistance is highly application and board-layout dependent. In applications where high maximum power dissipation exists, special care must be paid to thermal dissipation issues in board design.

Thermal Properties

Junction-to-Ambient Thermal Resistance (θ_{JA})[1]	60ºC/W to 100ºC/W

(1) Junction-to-ambient thermal resistance is highly application and board-layout dependent. In applications where high maximum power dissipation exists, special care must be paid to thermal dissipation issues in board design.

Copyright © 2006–2013, Texas Instruments Incorporated

Electrical Characteristics [1] [2]

Limits in standard typeface are for T_J = 25º C. Limits in **boldface** type apply over the operating ambient temperature range (-30ºC < T_A < +85ºC). Unless otherwise noted, specifications apply to the LP5526 Block Diagram with: $V_{DD1,2}$ = 3.0V to 5.5V, C_{VDD} = C_{VDDIO} = 100nF, C_{OUT} = 2 x 4.7µF, C_{IN} = 10µF, C_{VDDA} = 1µF, C_{VREF} = 100nF, L1 = 10µH, R_{RGB} = 2.4kΩ and R_{RT} = 82kΩ. [3]

Parameter		Test Conditions	Min	Typ	Max	Unit
I_{VDD}	Standby supply current (V_{DD1}, V_{DD2})	NSTBY = L Register 0DH=08H [4]		1.7	**7**	µA
	No-boost supply current (V_{DD1}, V_{DD2})	NSTBY = H, EN_BOOST = L		300	**800**	µA
	No-load supply current (V_{DD1}, V_{DD2})	NSTBY = H, EN_BOOST = H Autoload OFF		780	**1300**	µA
V_{DDA}	Output voltage of internal LDO	I_{VDDA} = 1mA		2.80		V
			-3		**+3**	%
V_{REF}	Reference voltage [5]			1.23		V

(1) All voltages are with respect to the potential at the GND pins.
(2) Min and Max limits are specified by design, test, or statistical analysis. Typical numbers are not ensured, but do represent the most likely norm.
(3) Low-ESR Surface-Mount Ceramic Capacitors (MLCCs) used in setting electrical characteristics.
(4) Boost output voltage set to 8V (08H in register 0DH) to prevent any unnecessary current consumption.
(5) No external loading allowed for V_{REF} pin.

Copyright © 2006–2013, Texas Instruments Incorporated

BLOCK DIAGRAM

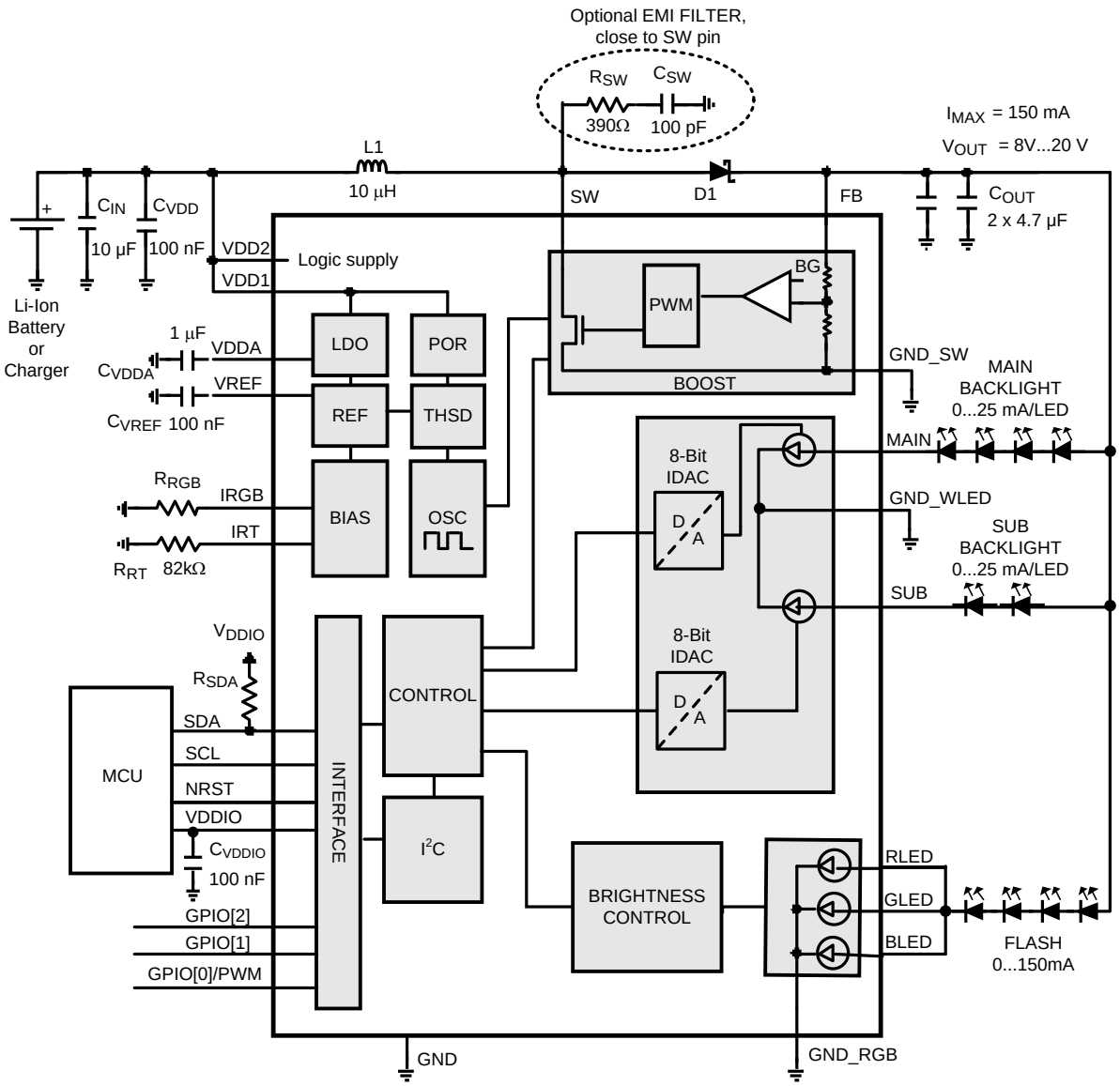

Copyright © 2006–2013, Texas Instruments Incorporated

DETAILED DESCRIPTION

Modes of Operation

RESET: In the RESET mode all the internal registers are reset to the default values. Reset is entered always if input NRST is LOW or internal Power On Reset is active. Power On Reset (POR) will activate during the chip startup or when the supply voltages V_{DD1} and V_{DD2} fall below 1.5V. Once V_{DD1} and V_{DD2} rises above 1.5V, POR will inactivate and the chip will continue to the STANDBY mode. NSTBY control bit is low after POR by default.

STANDBY: The STANDBY mode is entered if the register bit NSTBY is LOW and Reset is not active. This is the low power consumption mode, when all circuit functions are disabled. Registers can be written in this mode and the control bits are effective immediately after start up.

STARTUP: When NSTBY bit is written high, the INTERNAL STARTUP SEQUENCE powers up all the needed internal blocks (V_{REF}, Bias, Oscillator etc.). To ensure the correct oscillator initialization, a 10ms delay is generated by the internal state-machine. If the chip temperature rises too high, the Thermal Shutdown (TSD) disables the chip operation and STARTUP mode is entered until no thermal shutdown event is present.

BOOST STARTUP: Soft start for boost output is generated in the BOOST STARTUP mode. The boost output is raised in low current PWM mode during the 20ms delay generated by the state-machine. All LED outputs are off during the 20ms delay to ensure smooth startup. The Boost startup is entered from Internal Startup Sequence if EN_BOOST is HIGH or from Normal mode when EN_BOOST is written HIGH.

NORMAL: During NORMAL mode the user controls the chip using the Control Registers. The registers can be written in any sequence and any number of bits can be altered in a register in one write.

Copyright © 2006–2013, Texas Instruments Incorporated

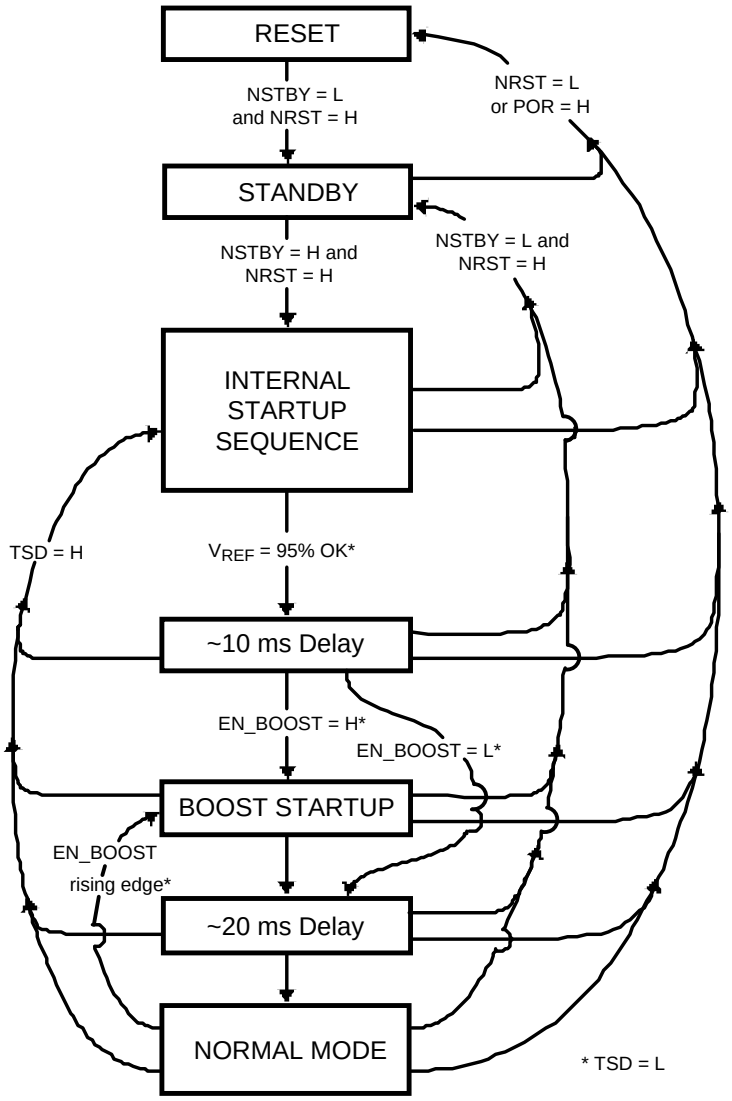

Power-Up Sequence

When powering up the device, V_{DD1} and V_{DD2} should be greater than V_{DDIO} to prevent any damage to the device.

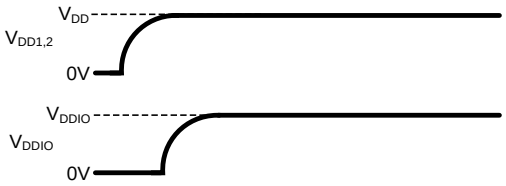

Magnetic Boost DC/DC Converter

The LP5526 Boost DC/DC Converter generates an 8…20V supply voltage for the LEDs from single Li-Ion battery (3V…4.5V). The output voltage is controlled with an 8-bit register in 12 steps. The converter is a magnetic switching PWM mode DC/DC converter with a current limit. Switching frequency is 1MHz, when timing resistor RT is 82kΩ. Timing resistor defines the internal oscillator frequency and thus directly affects boost frequency and RGB timings.

Copyright © 2006–2013, Texas Instruments Incorporated

EMI filter (R_{SW} and C_{SW}) on the SW pin can be used to suppress EMI caused by fast switching. These components should be as near as possible to the SW pin to ensure reliable operation. The LP5526 Boost Converter uses pulse-skipping elimination to stabilize the noise spectrum. Even with light load or no load a minimum length current pulse is fed to the inductor. An active load is used to remove the excess charge from the output capacitor at very light loads. Active load can be disabled by writing the EN_AUTOLOAD bit low. Disabling active load will increase slightly the efficiency at light loads, but the downside is that pulse skipping will occur. The Boost Converter should be stopped and set to 8V when there is no load to minimize the current consumption.

The topology of the magnetic boost converter is called CPM control, current programmed mode, where the inductor current is measured and controlled with the feedback. The user can program the output voltage of the boost converter. The output voltage control changes the resistor divider in the feedback loop. Figure 5 shows the boost topology with the protection circuitry. Four different protection schemes are implemented:

1. Over voltage protection, limits the maximum output voltage
   - Keeps the output below breakdown voltage.
   - Prevents boost operation if battery voltage is much higher than desired output.
2. Over current protection, limits the maximum inductor current
   - Voltage over switching NMOS is monitored; too high voltages turn the switch off.
3. Feedback break protection. Prevents uncontrolled operation if FB pin gets disconnected.
4. Duty cycle limiting, done with digital control.

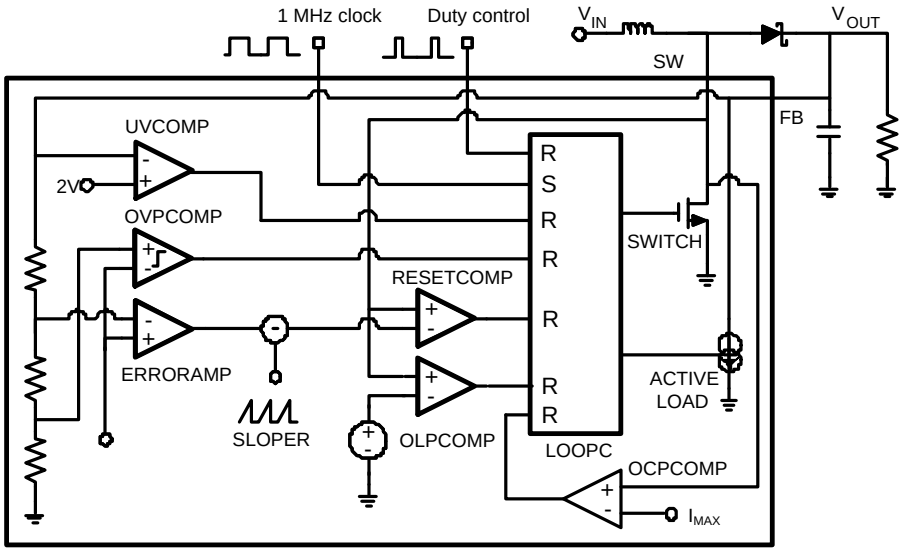

Figure 5. Boost Converter Topology

MAGNETIC BOOST DC/DC CONVERTER ELECTRICAL CHARACTERISTICS

Parameter		Test Conditions	Min	Typ	Max	Unit
I_{LOAD}	Maximum non-continuous load current(1)	3.0V ≤ V_{IN} ≤ 3.2V V_{OUT} = 20V			140	mA
		3.2V < V_{IN} V_{OUT} = 20V			150	
I_{LOAD}	Maximum continuous load current	3.0V = V_{IN} V_{OUT} = 20V			100	
V_{OUT}	Output voltage accuracy (FB pin)	3.0V ≤ V_{IN} ≤ 5.5V V_{OUT} = 20V	**−2.3** -1.7		**+2.3** +1.7	%
RDS_{ON}	Switch ON resistance	I_{SW} = 0.5A		0.15	**0.3**	Ω
f_{PWM}	PWM mode switching frequency	RT = 82 kΩ		1.0		MHz
	Frequency accuracy	RT = 82 kΩ	−7		+7	%
			−9		**+9**	
t_{PULSE}	Switch pulse minimum width	no load		45		ns
$t_{STARTUP}$	Startup time	Boost startup from STANDBY to V_{OUT} = 20V, no load		15		ms
I_{MAX}	SW pin current limit			1500	**1850**	mA

(1) Maximum non-continuous currents rates as short pulses (t < 1s). Exposure to maximum rating conditions for extended periods may affect device reliability.

BOOST STANDBY MODE

User can set the Boost Converter to STANDBY mode by writing the register bit EN_BOOST low. When EN_BOOST is written high, the converter starts for 20ms in low current PWM mode and then goes to normal PWM mode. All LED outputs are off during the 20ms delay to ensure smooth startup.

BOOST OUTPUT VOLTAGE CONTROL

User can control the boost output voltage by Boost Output 8-bit register.

Boost Output [7:0] Register 0DH		Boost Output Voltage (typical)
Bin	**Dec**	
0000 1000	8(1)	8.0V
0000 1001	9	9.0V
0000 1010	10	10.0V
0000 1011	11	11.0V
0000 1100	12	12.0V
0000 1101	13	13.0V
0000 1110	14	14.0V
0000 1111	15	15.0V
0001 0000	16	16.0V
0001 0001	17	17.0V
0001 0010	18	18.0V
0001 0011	19	19.0V
0001 0100	20(2)	20.0V

(1) If register value is lower than 8, then value of 8 is used internally.
(2) If register value is higher than 20, then value of 20 is used internally.

Copyright © 2006–2013, Texas Instruments Incorporated

Boost Output Voltage Control

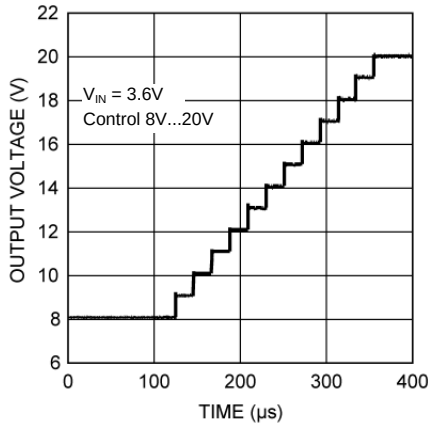

Figure 6.

Boost Converter Typical Performance Characteristics

Vin = 3.6V, Vout = 20.0V if not otherwise stated

Boost Converter Efficiency

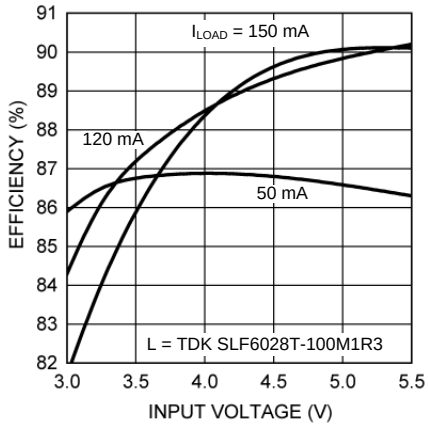

Figure 7.

Boost Typical Waveforms at 150mA Load

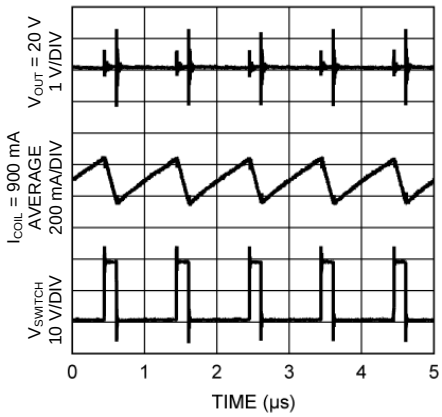

Figure 8.

Vin = 3.6V, Vout = 20.0V if not otherwise stated

Battery Current vs Voltage

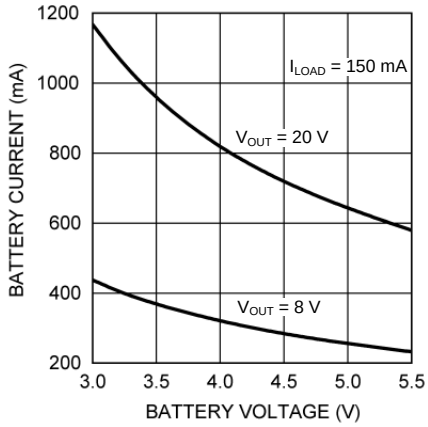

Figure 9.

Boost Output Voltage vs. Current

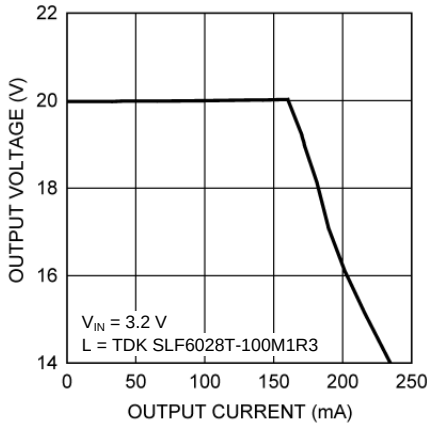

Figure 10.

Boost Line Regulation 3.0V - 3.6V, no load

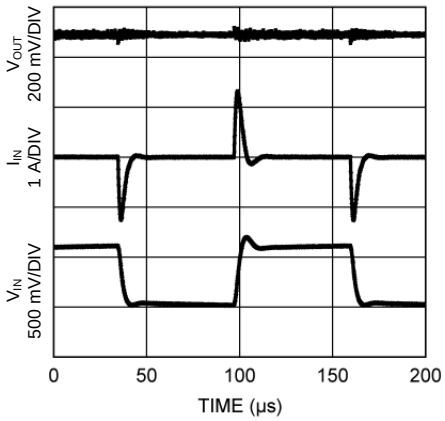

Figure 11.

Boost Turn On Time with No Load

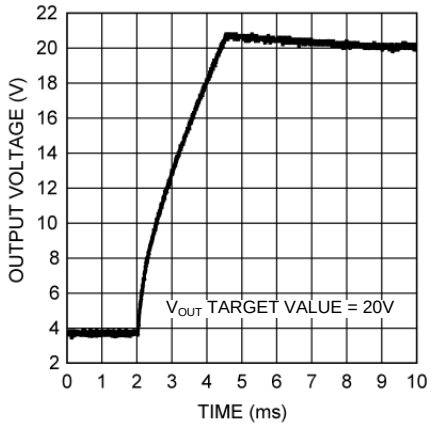

Figure 12.

Boost Load Transient Response 50mA – 150mA

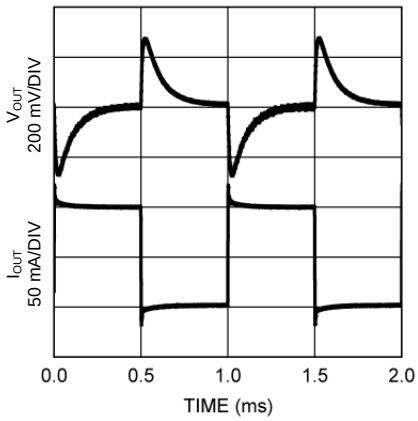

Figure 13.

Autoload Effect on Input Current, No Load

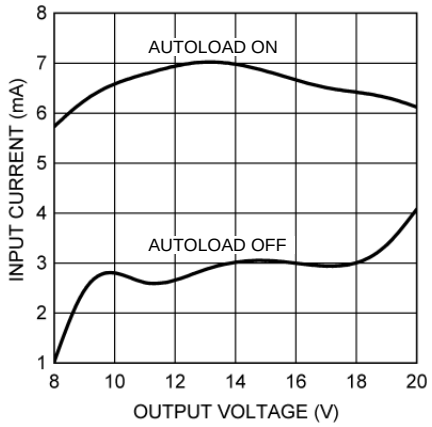

Figure 14.

Copyright © 2006–2013, Texas Instruments Incorporated

Vin = 3.6V, Vout = 20.0V if not otherwise stated

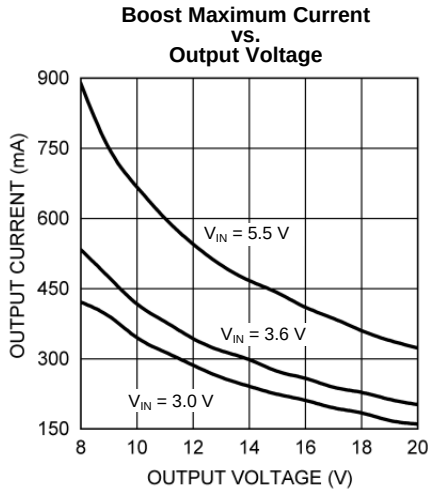

Figure 15.

Functionality of Color LED Outputs (RLED, GLED, BLED)

LP5526 has one RGB/color LED output, consisting of three individual LED output pins. Output pins can be used in switch mode or constant current mode. Output mode can be selected with the control register (address 00H) bit CC_SW. If the bit is set high, then RGB outputs are in switch mode, otherwise in constant current mode. These modes are described later in separate chapters.

RGB LED output control can be done in three ways:

1. Defining the expected color and brightness with internal PWM in RGB register (address 01H)
2. Direct setting each LED ON/OFF via RGB Control register (address 00H)
3. External PWM control

BRIGHTNESS CONTROL WITH RGB REGISTER

If the RGB LED output is used by defining the balance and brightness in the RGB register, then one needs to set EN_RGB bit high and RGB_PWM bit high in the Control register (address 00H). RSW, GSW and BSW are used to enable each LED output, enabled when written high. CC_SW defines the LED output mode. A single register is used for defining the color and brightness for the RGB LED output. OVL bit selects overlapping/non-overlapping mode. Overlapping mode is selected when OVL = 1.

Table 2. CONTROL REGISTER (00H)

Name	Bit	Description
RGB_PWM	7	0 = Internal PWM control disabled 1 = Internal PWM control enabled
EN_RGB	6	0 = RGB outputs disabled 1 = RGB outputs enabled
CC_SW	5	0 = Constant current sink mode 1 = Switch mode
RSW	3	0 = RLED disabled 1 = RLED enabled
GSW	2	0 = GLED disabled 1 = GLED enabled
BSW	1	0 = BLED disabled 1 = BLED enabled
RGB REGISTER (01H)		
COLOR[3:0]	7:4	Color for RGB LED output
BRIGHT[2:0]	3:1	Brightness control

Table 2. CONTROL REGISTER (00H) (continued)

Name	Bit	Description
OVL	0	0 = Non-overlapping mode 1 = Overlapping mode

Brightness control is logarithmic and is programmed as follows:

Table 3.

Bright[2:0]	Brightness [%]	Ratio to max brightness
000	0	0
001	1.56	1/64
010	3.12	1/32
011	6.25	1/16
100	12.5	1/8
101	25	1/4
110	50	1/2
111	100	1/1

Table 4.

COLOR(1)[3:0]	RED active [%]	GREEN active [%]	BLUE active [%]	RGB COLOR
0000	100	0	0	red
0001	0	100	0	green
0010	0	0	100	blue
0011	50	50	0	yellow
0100	0	50	50	cyan
0101	50	0	50	magenta
0110	33	33	33	white
0111	50	25	25	pink
1000	25	50	25	light green
1001	25	50	25	light blue
1010	25	25	50	orange
1011	75	25	0	deep pink
1100	0	75	25	spring green
1101	25	75	0	lawn green
1110	0	25	75	sky blue
1111	25	0	75	indigo

(1) 16 colors can be selected as follows. Please note that exact color depends on RGB LED current and type. Color setting is valid only in non-overlapping mode.

Copyright © 2006–2013, Texas Instruments Incorporated

Overlapping Mode

In overlapping mode the brightness is controlled using PWM duty cycle based control method as Figure 16 shows.

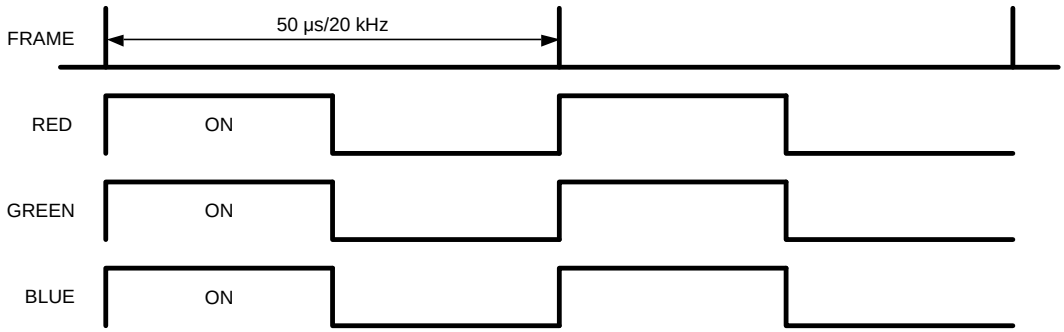

Figure 16. Overlapping Mode

Since RGB outputs are on simultaneously, the maximum load peak current is:

$$I_{MAX} = I(RLED)_{MAX} + I(GLED)_{MAX} + I(BLED)_{MAX} \quad (1)$$

Non-Overlapping Mode

The timing diagram shows the split R, G and B and brightness control effect to split parts. Full brightness is used in the diagram. If for example ½ brightness is used, the frame is still 50µs, but all LED outputs' ON time is 50% shorter and at the last 25µs all LED outputs are OFF.

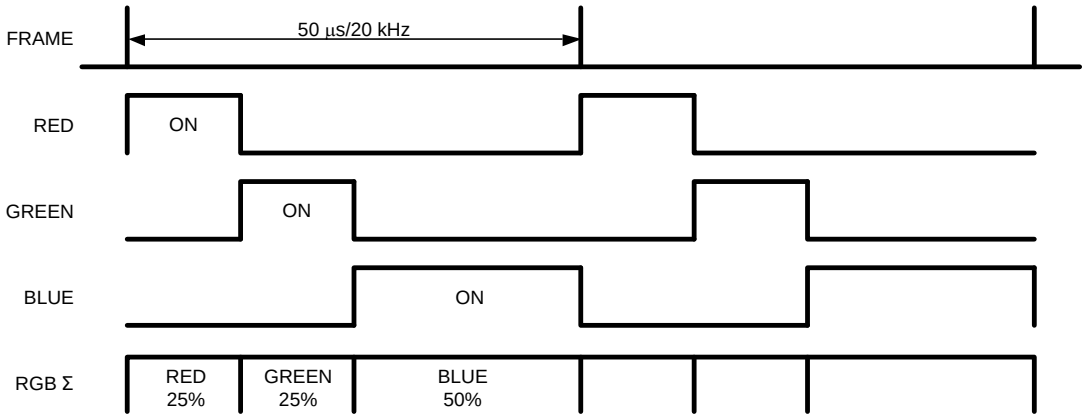

Figure 17. Non-Overlapping Mode

The non-overlapping mode has 16 programmed colors (different R, G and B ratio -> different color). Since the R, G and B are split into non-overlapping slots the output current through the RGB LED can be calculated with following equation:

$$I_{AVG}=(C_R \times I_R + C_G \times I_G + C_B \times I_B) \times B \quad (2)$$

where

C = Color [%] (see Table 4)

B = Brightness [%] (see Table 3)

LED ON/OFF CONTROL WITH RGB CONTROL REGISTER

Each LED output can be set ON by writing the corresponding bit high in the Control register (00H). RSW controls RLED, GSW controls GLED and BSW controls BLED output. Note that EN_RGB bit must be high and RGB_PWM bit low. In this mode, the RGB register (01H) does not have any effect. CC_SW bit in Control register defines the LED output mode.

Switch Mode / Constant Current Mode

Each RGB LED output can be set to act as a switch or a constant current sink. Selection of mode is done with the CC_SW bit in the Control Register. If bit is set high, then the switch mode is selected. Default is switch mode.

SWITCH MODE

In switch mode, the RGB LED outputs are low ohmic switches to ground. Resistance is typically 3.2Ω. **External ballast resistors must be used to limit the current through the LED.**

CONSTANT CURRENT MODE

In constant current mode, the maximum output current is defined with a single external resistor (R_{RGB}) and the maximum current control register (address 02H).

Table 5. RGB MAX CURRENT REGISTER (02H)

Name	Bit	Description
IR[1:0]	5:4	RLED maximum current
IG[1:0]	3:2	GLED maximum current
IB[1:0]	1:0	BLED maximum current

Maximum current for each LED output is adjusted with the RGB max current register in following way:

IR[1:0], IG[1:0], IB[1:0]	Maximum Current / Output
00	0.25 x I_{MAX}
01	0.50 x I_{MAX}
10	0.75 x I_{MAX}
11	1.00 x I_{MAX}

External ballast resistors are not needed in this mode. The maximum current for all RGB LED drivers is set with R_{RGB}. The equation for calculating the maximum current is:

$$I_{MAX} = 100 \times 1.23V / (R_{RGB} + 50\ \Omega) \quad (3)$$

where

I_{MAX} = maximum RGB current in any RGB output (during constant current mode)

1.23V = reference voltage

100 = internal current mirror multiplier

R_{RGB} = resistor value in Ohms

50Ω = Internal resistor in the I_{RGB} input

Table with example resistance values and corresponding output currents:

RGB Resistor R_{RGB} (kΩ)	Maximum Current / Output I_{MAX} (mA)
2.4	50.2
2.7	44.7
3.0	40.3
3.3	36.7
3.6	33.7
3.9	31.1.

Copyright © 2006–2013, Texas Instruments Incorporated

RGB Resistor R_{RGB} (kΩ)	Maximum Current / Output I_{MAX} (mA)
4.3	28.3
4.7	25.9
5.1	23.9
5.6	21.8
6.2	19.7

Note that the LED output requires a minimum saturation voltage in order to act as a true constant current sink. The saturation voltage minimum is typically 230mV defined with 10% current drop. If the LED output voltage drops below 230mV, then the current will decrease significantly.

EXTERNAL PWM CONTROL

The GPIO[0]/PWM pin can be used to control the RGB output brightness or set RGB LEDs on/off. PWM function for the pin is selected by writing EN_PWM_PIN high in GPIO control register (address 06H). Note, that EN_RGB bit must be set high. Each LED output can be enabled with RSW, GSW and BSW bits. EN_EXT_R_PWM, EN_EXT_G_PWM and EN_EXT_B_PWM bits are used to select, which LED outputs are controlled with the external PWM input. Note that polarity of external PWM control is active high i.e. when pin is in high state, then LED output is enabled. If RGB_PWM is set low, then each selected LED output is controlled directly with external PWM input. If RGB_PWM is set high, then internal PWM control is modulated by the external PWM input. In latter case, internal PWM control is passed to LED when external PWM input is high.

FLASH LED DRIVING USING RGB DRIVERS

RGB drivers can be connected in parallel and used as a flash LED driver (see Figure 2). Flash LEDs can be powered through the boost converter. Flash LEDs are controlled basically the same way as RGB LEDs controlling is previously described. Additional safety mode is introduced for FLASH LED driving to avoid prolonged flash and damage to application. FLASH can be done in 3 different ways:

1. Using external PWM control
2. Controlling RGB max current register values
3. Using Flash mode

Using External PWM control

In this case pre-flash brightness is adjusted by adjusting the pulse width of PWM signal

- Enable external PWM pin by writing EN_PWM_PIN bit high
- Use EN_EXT_R_PWM, EN_EXT_G_PWM and EN_EXT_B_PWM bits to select, which LED outputs are controlled by the external PWM control. Output which external PWM control is not selected will be on constantly regardless of the state of the external PWM pin.
- Enable RGB constant current mode, if external ballast resistors are not used (CC_SW = 0)
- Disable internal RGB PWM mode (RGB_PWM = 0)
- Write wanted maximum current values for each output to RGB max current register (e.g. 11b for maximum current)
- Enable RGB functions (EN_RGB = 1, RSW= 1, GSW= 1, BSW = 1)
- Use external PWM control pin (GPIO[0]/PWM) to introduce pre-flash and flash.

Copyright © 2006–2013, Texas Instruments Incorporated

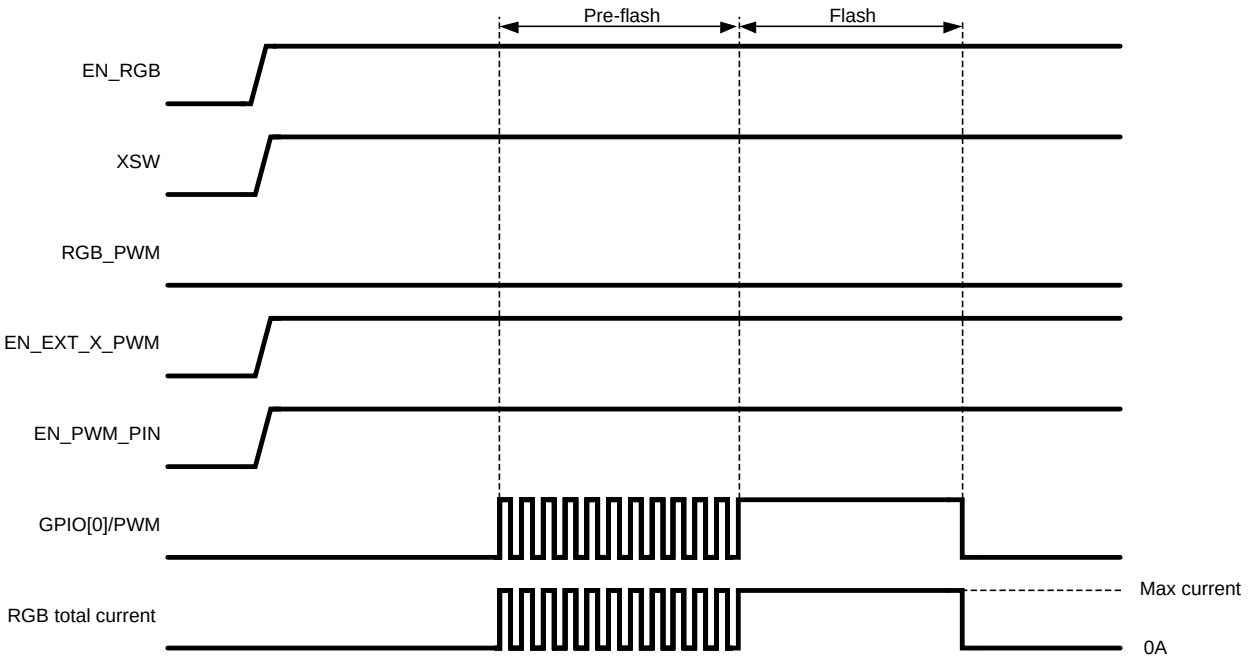

Figure 18. Using External PWM Control for Flash

Controlling RGB Max Current Register Values

In this case pre-flash brightness is adjusted by adjusting the current values in the RGB max current register. Note that in this mode flash control speed and timing depends on the I^2C communication speed.

- Enable RGB functions and disable PWM mode (EN_RGB = 1, RGB_PWM = 0)
- Enable RGB constant current mode (CC_SW = 0)
- Write pre-flash values for each output to RGB max current register (e.g. 00b for 25% of maximum current)
- Start pre-flash by switching on the LEDs (RSW = 1, GSW = 1, BSW = 1). Pre-flash brightness can be adjusted also by setting on only one or two LEDs during the pre-flash
- Start flash by writing each output maximum current values to RGB max current register
- Stop flash by switching off the LEDs (RSW = 0, GSW = 0, BSW = 0)

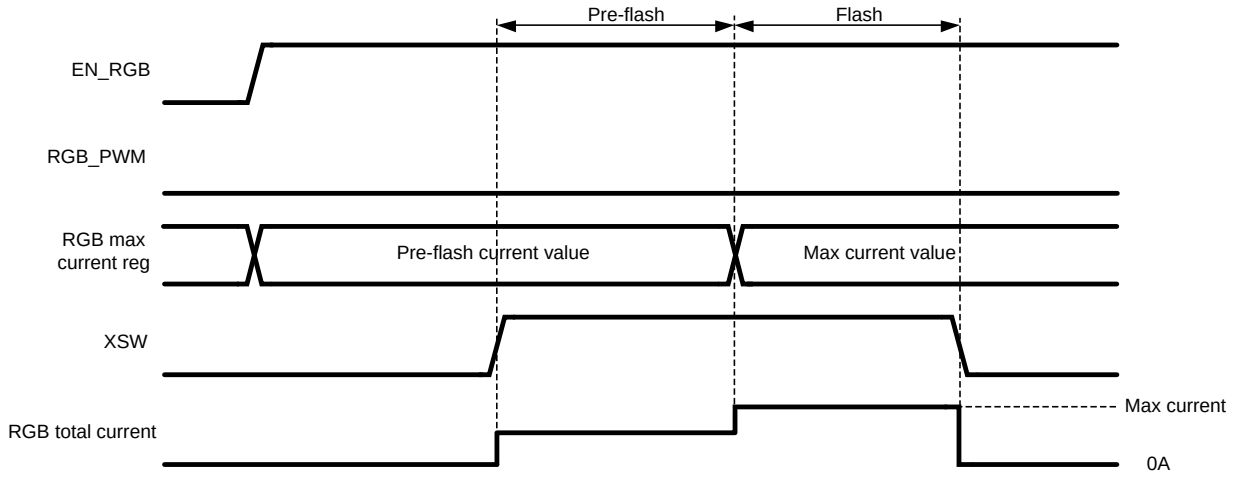

Figure 19. Controlling RGB Max Current Values to Introduce Flash

Copyright © 2006–2013, Texas Instruments Incorporated

When RLED, GLED and BLED are connected together as in Figure 1, flash current can be adjusted with 8.33% step in constant current mode by changing RGB max current register values as seen in Table 6. Note that 0% means that appropriate output is turned off by setting RSW, GSW or BSW bit to 0.

Table 6.

I_R [%]	I_G [%]	I_B [%]	Total Current [%]
0	0	25	8.33
0	0	50	16.67
0	0	75	25.00
0	0	100	33.33
0	25	100	41.67
0	50	100	50.00
0	75	100	58.33
0	100	100	66.67
25	100	100	75.00
50	100	100	83.33
75	100	100	91.67
100	100	100	100

Using Flash Mode

In this mode Flash is triggered with external PWM pin and pre-flash brightness is adjusted by adjusting the RGB max current values. After flash pulse flash led will be shut down.

- Write the pre-flash current values to RGB max current register
- Enable RGB functions and disable PWM mode (EN_RGB = 1, RGB_PWM = 0)
- Enable flash mode (EN_FLASH = 1), make sure GPIO[0]/PWM pin is in low state
- Enable external PWM pin (EN_PWM_PIN = 1)
- Start pre-flash by switching on the LEDs (RSW = 1, GSW = 1, BSW = 1). Pre-flash brightness can be affected also by setting on only one or two LEDs
- Use EN_EXT_R_PWM, EN_EXT_G_PWM and EN_EXT_B_PWM bits to select which LED outputs are used for flash
- Start flash pulse by setting GPIO[0]/PWM pin high and stop it by setting GPIO[0]/PWM pin low
- During the flash pulse the LED outputs with EN_EXT_x_PWM bit enabled give out maximum current, regardless of RGB max current register value or XSW values

NOTE

EN_FLASH bit must be set low, and then high again before it is possible to make a new flash pulse.

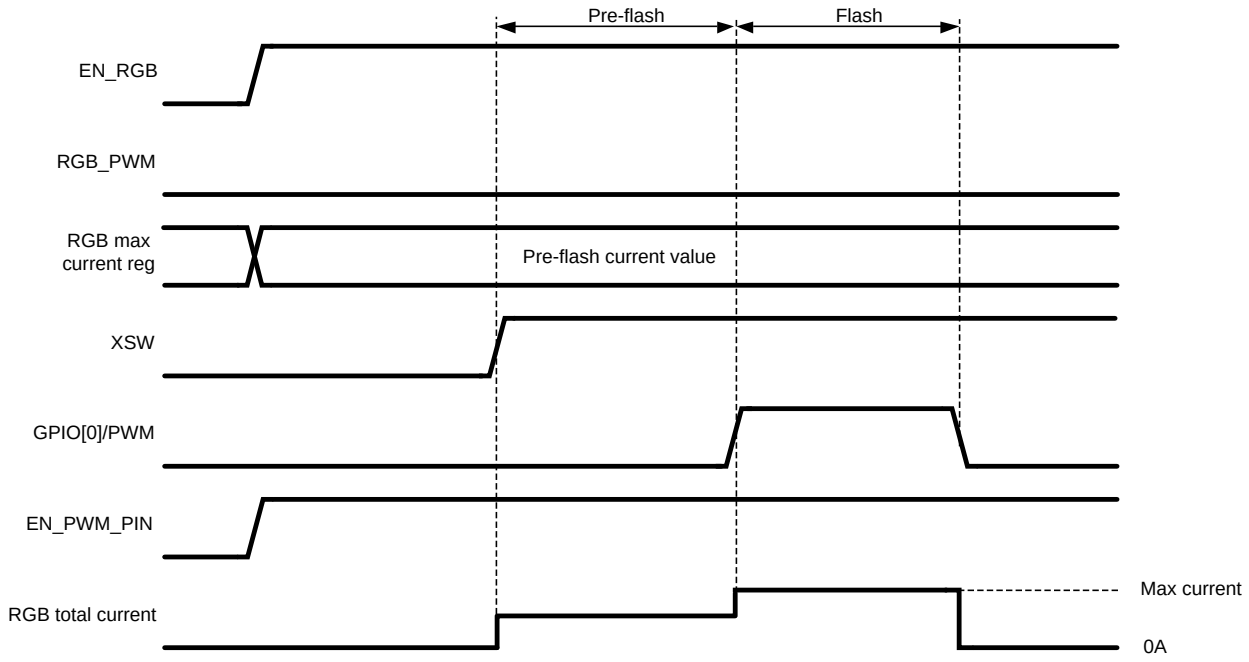

Figure 20. Using Flash Mode

FLASH SAFETY TIMER FUNCTION

Flash safety function can be used to prevent damages due to possible overheating when flash or RGB LEDs have been stuck on because of software or user error. Safety function has two operation modes:

1. Disabling selected RGB drivers when no writing has been done to the RGB max current register (address 02H) for 1 second
2. Disabling selected RGB drivers if the external flash trigger pulse is longer than 1 second

Flash safety function can be individually enabled for all RGB LED drivers (EN_SAFETY_R, EN_SAFETY_G, EN_SAFETY_B). The safety function operation mode depends on the state of EN_FLASH bit.

1. EN_FLASH = 0: Safety counter starts counting when at least one of the EN_SAFETY_X bits is enabled. Safety counter can be cleared by executing an I^2C read or write sequence to address 02H. If safety counter reaches one second, the LEDs which have the safety function enabled, are switched off. Also the read-only bit SAFETY_SET is set high.
2. EN_FLASH = 1: Safety counter starts counting when the external flash trigger pulse starts (GPIO[0]/PWM goes high) and stops counting when flash pulse stops (GPIO[0]/PWM goes low). If flash pulse is longer than one second, the LEDs which have the safety function enabled, are switched off. Also the read-only bit SAFETY_SET is set high.

In both cases (EN_FLASH = 0/1) after one second is reached and the LEDs which safety bit has been enabled are switched off, the LED state can be restored by disabling the safety function of the corresponding LED. Counter can be cleared only by disabling all safety bits (EN_SAFETY_R = 0, EN_SAFETY_G = 0, EN_SAFETY_B = 0), I^2C read or write sequence to address 02H does not clear the counter when safety function has been activated.

Copyright © 2006–2013, Texas Instruments Incorporated

RGB LEDs Driver Performance Characteristics

Parameter		Test Conditions	Min	Typ	Max	Unit
$I_{LEAKAGE}$	RLED, GLED, BLED pin leakage current				**1**	µA
$I_{MAX(RGB)}$	Maximum recommended sink current(1)	CC mode			**50**	mA
		SW mode			**60**	mA
	Accuracy at 50mA	CC mode		5	**12.5**	%
	Current mirror ratio	CC mode		1:100		
	RGB current matching error	I_{RGB} set to 50mA, CC mode		2		%
R_{SW}	Switch resistance	SW mode		3.2		Ω
f_{RGB}	RGB internal PWM switching frequency	Accuracy same as internal clock frequency accuracy		20		kHz
V_{SAT}	Saturation voltage (current drop 10%)	+25ºC, I_{RGB} set to 50mA		230	350	mV
		-30ºC			300	
		+85ºC			430	

(1) RGB current should be limited as follows:
constant current mode – limited by external R_{RGB} resistor
switch mode – limited by external ballast resistors

Output Current vs Pin Voltage (CC Mode)

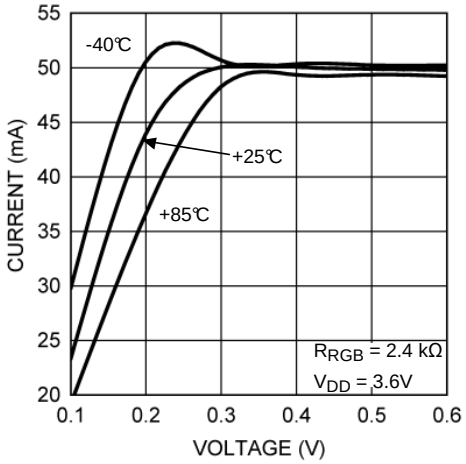

Figure 21.

Output Current vs R_{RGB} (CC Mode)

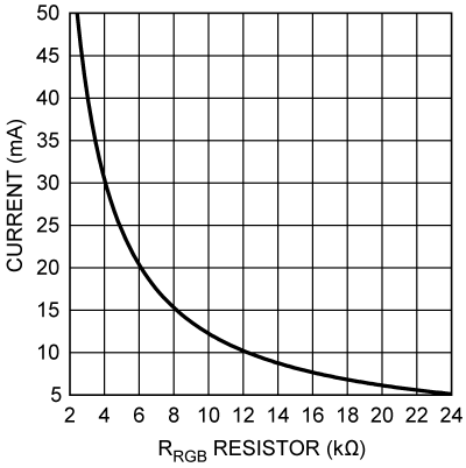

Figure 22.

Backlight Drivers

LP5526 has 2 independent backlight drivers. Both drivers are regulated constant current sinks. LED current for both LED strings are controlled by the 8-bit current mode DACs with 0.1 mA step. MAIN and SUB LEDs can be also controlled with one DAC (MAIN) for better matching allowing the use of larger displays having up to 8 white LEDs by setting DISPL bit to 1.

Copyright © 2006–2013, Texas Instruments Incorporated

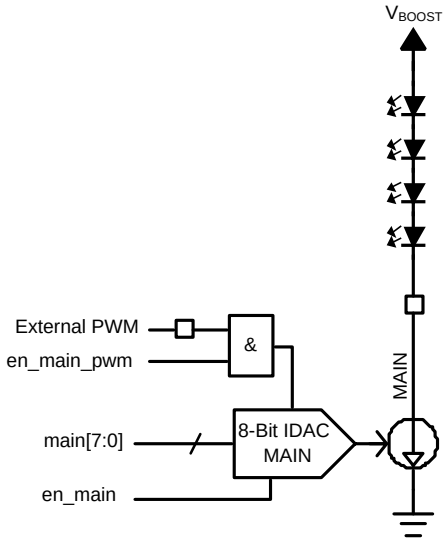

Figure 23. MAIN output for 4 LEDs (DISPL = 0)

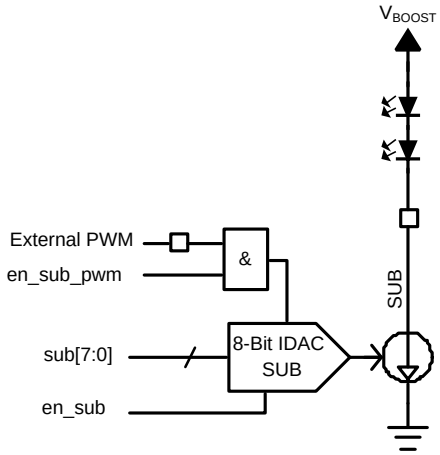

Figure 24. SUB output for 2 LEDs (DISPL = 0)

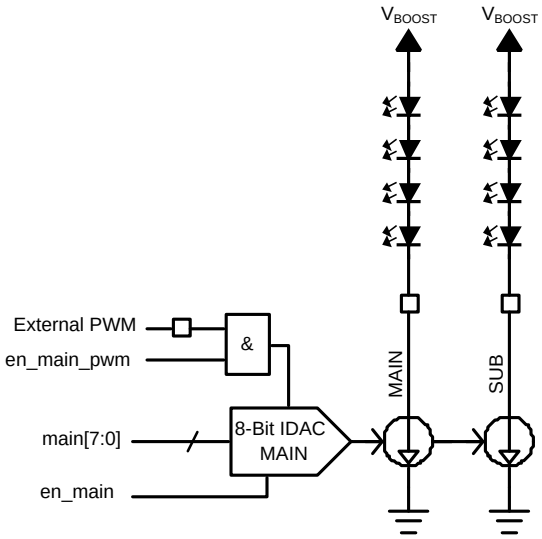

Figure 25. MAIN and SUB outputs for 8 LEDs (DISPL = 1)

EXTERNAL PWM CONTROL

The GPIO[0]/PWM pin can be used to control the backlight drivers brightness or set LEDs on/off. External PWM control is enabled by writing 1 to EN_MAIN_PWM and/or EN_SUB_PWM bits in register address 2BH. GPIO[0]/PWM pin is used as external PWM input when EN_PWM_PIN is set high. PWM input is active high, i.e. LED is activated when in high state.

FADE IN / FADE OUT

LP5526 has an automatic fade in and out for main and sub backlight. The fade function is enabled with EN_FADE bit. The slope of the fade curve is set by the SLOPE bit. Fade control for main and sub display is set by FADE_SEL bit.

Recommended fading sequence:

1. Set SLOPE
2. Set FADE_SEL
3. Set EN_FADE = 1
4. Set EN_MAIN / EN_SUB = 1

Copyright © 2006–2013, Texas Instruments Incorporated

5. Set target WLED value
6. Fading will be done either within 0.65s or 1.3s based on SLOPE selection

Fading times apply to full scale change i.e. from 0 to 100% or vice versa. If the current change does not correspond to full scale change, the time will be respectively shorter. See WLED Dimming diagrams for typical fade times.

Table 7. WLED CONTROL REGISTER (03H)(1)

Name	Bit	Description
SLOPE	5	FADE execution time: 0 = 1.3s (full scale) 1 = 0.65s (full scale)
FADE_SEL	4	FADE selection: 0 = FADE controls MAIN 1 = FADE controls SUB
EN_FADE	3	FADE enable 0 = FADE disabled 1 = FADE enabled
DISPL	2	Display mode: 0 = MAIN and SUB individual control 1 = MAIN and SUB controlled with MAIN DAC
EN_MAIN	1	MAIN enable: 0 = disable 1 = enable
EN_SUB	0	SUB enable: 0 = disable 1 = enable

(1) If DISPL=1 and FADE_SEL=0 then FADE affects MAIN and SUB.

Adjustment is made with 04H (main current) and with 05H (sub current) registers:

MAIN CURRENT [7:0] SUB CURRENT [7:0]	Driver Current, mA (typical)
0000 0000	0
0000 0001	0.1
0000 0010	0.2
0000 0011	0.3
…	…
…	…
1111 1101	25.3
1111 1110	25.4
1111 1111	25.5

Backlight Driver Electrical Characteristics

Parameter		Test Conditions	Min	Typ	Max	Unit
I_{MAX}	Maximum Sink Current			25.5	**30**	mA
$I_{LEAKAGE}$	Leakage Current	$V_{SUB,\ MAIN}$ =20V		0.003	**1**	µA
I_{MAIN} I_{SUB}	MAIN Current tolerance SUB Current tolerance	I_{MAIN} and I_{SUB} set to 12.8mA (80H)	**11.1**	12.8	**14.1**	mA %
$Match_{MAIN-SUB}$	Sink current matching error(1)	I_{SINK}=12.8mA, DISPL=1		0.2		%
$Match_{MAIN-SUB}$	Sink current matching error(1)	I_{SINK}=12.8mA, DISPL=0		5		%
V_{SAT}	95% Saturation Voltage	I_{SINK}=25.5mA		400	500 **650**	mV

(1) Matching is the maximum difference from the average.

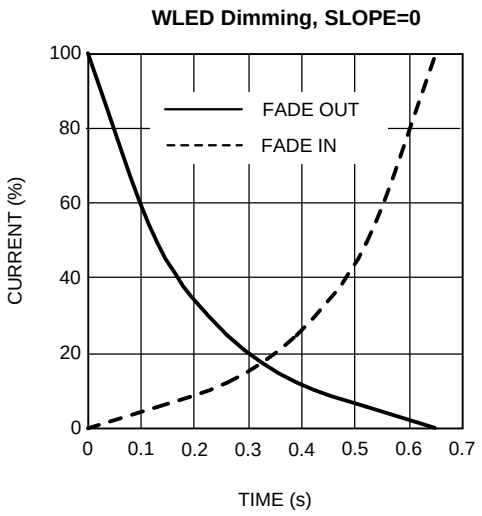

Figure 26.

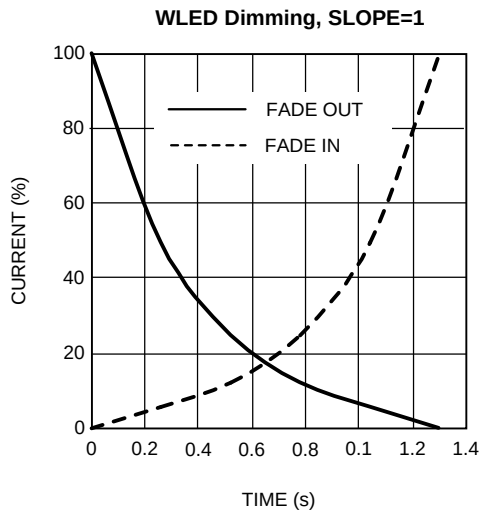

Figure 27.

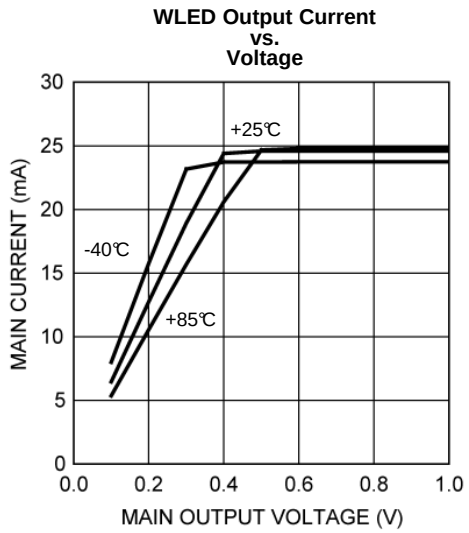

Figure 28.

General Purpose I/O Functionality

LP5526 has three general purpose I/O pins: GPIO[0]/PWM, GPIO[1] and GPIO[2]. GPIO[0]/PWM can also be used as a PWM input for the external LED PWM controlling. GPIO bi-directional drivers are operating from the V_{DDIO} supply domain.

Registers for GPIO are as follows:

Table 8. GPIO CONTROL (06H)

Name	Bit	Description
EN_PWM_PIN	4	Enable PWM pin 0 = disable 1 = enable
OEN[2:0]	2:0	GPIO pin direction 0 = input 1 = output

Copyright © 2006–2013, Texas Instruments Incorporated

Table 9. GPIO DATA (07H)

Name	Bit	Description
DATA[2:0]	2:0	Data bits

GPIO control register is used to set the direction of each GPIO pin. For example, by setting OEN0 bit high the GPIO[0]/PWM pin acts as a logic output pin with data defined DATA0 in GPIO data register. Note, that the EN_PWM_PIN bit overrides OEN0 state by forcing GPIO[0]/PWM to act as PWM input. GPIO[1] and GPIO[2] pins can be selected to be inputs or outputs, defined by OEN1 and OEN2 bit status. PWM functionality is valid only for GPIO[0]/PWM pin. GPIO data register contains the data of GPIO pins. When output direction is selected to GPIO pin, then GPIO data register defines the output pin state. When GPIO data register is read, it contains the state of the pin despite of the pin direction.

Table 10. Logic Interface Characteristics(V_{DDIO} = 1.65V...$V_{DD1,2}$ unless otherwise noted)

Parameter		Test Conditions	Min	Typ	Max	Unit
LOGIC INPUT SCL, SDA, GPIO[0:2]						
V_{IL}	Input low level				**0.2×V_{DDIO}**	V
V_{IH}	Input high level		**0.8 × V_{DDIO}**			V
I_I	Logic input current		**−1.0**		**1.0**	µA
f_{SCL}	Clock frequency				**400**	kHz
LOGIC INPUT NRST						
V_{IL}	Input low level				**0.5**	V
V_{IH}	Input high level		**1.2**			V
I_I	Input current		**-1.0**		**1.0**	µA
t_{NRST}	Reset pulse width		**10**			µs
LOGIC OUTPUT SDA						
V_{OL}	Output low level	I_{SDA} = 3mA		0.3	**0.5**	V
V_{OH}	Output high level	I_{SDA} = -3mA	**V_{DDIO} − 0.5**	V_{DDIO} − 0.3		
I_L	Output leakage current	V_{SDA} = 2.8V			**1.0**	µA
LOGIC OUTPUT GPIO[0:2]						
V_{OL}	Output low level	I_{GPIO} = 2 mA		0.3	**0.5**	V
V_{OH}	Output high level	I_{GPIO} = -2 mA	**V_{DDIO} − 0.5**	V_{DDIO} − 0.3		V
I_L	Output leakage current	V_{GPIO} = 2.8V			**1.0**	µA

I²C Compatible Interface

I²C SIGNALS

The SCL pin is used for the I²C clock and the SDA pin is used for bidirectional data transfer. Both these signals need a pull-up resistor according to I²C specification.

I²C DATA VALIDITY

The data on SDA line must be stable during the HIGH period of the clock signal (SCL). In other words, state of the data line can only be changed when CLK is LOW.

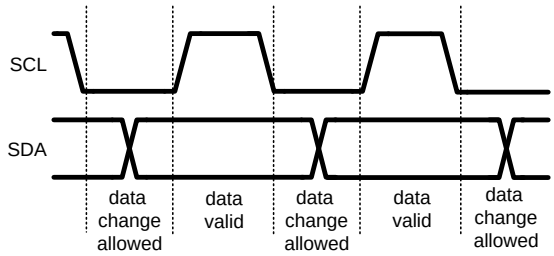

Figure 29. I²C Signals: Data Validity

I²C START AND STOP CONDITIONS

START and STOP bits classify the beginning and the end of the I²C session. START condition is defined as SDA signal transitioning from HIGH to LOW while SCL line is HIGH. STOP condition is defined as the SDA transitioning from LOW to HIGH while SCL is HIGH. The I²C master always generates START and STOP bits. The I²C bus is considered to be busy after START condition and free after STOP condition. During data transmission, I²C master can generate repeated START conditions. First START and repeated START conditions are equivalent, function-wise.

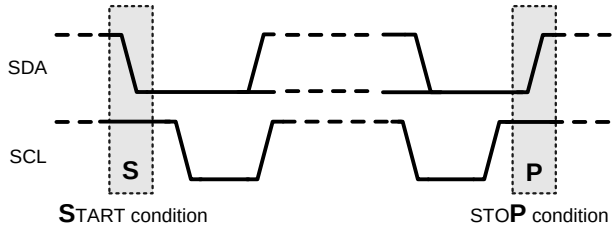

Figure 30. I²C Start and Stop Conditions

TRANSFERRING DATA

Every byte put on the SDA line must be eight bits long, with the most significant bit (MSB) being transferred first. Each byte of data has to be followed by an acknowledge bit. The acknowledge related clock pulse is generated by the master. The transmitter releases the SDA line (HIGH) during the acknowledge clock pulse. The receiver must pull down the SDA line during the 9th clock pulse, signifying an acknowledge. A receiver which has been addressed must generate an acknowledge after each byte has been received.

After the START condition, the I²C master sends a chip address. This address is seven bits long followed by an eighth bit which is a data direction bit (R/W). The LP5526 address is 59H (101 1001b). For the eighth bit, a “0” indicates a WRITE and a “1” indicates a READ. This means that the first byte is B2H for WRITE and B3H for READ. The second byte selects the register to which the data will be written. The third byte contains data to write to the selected register.

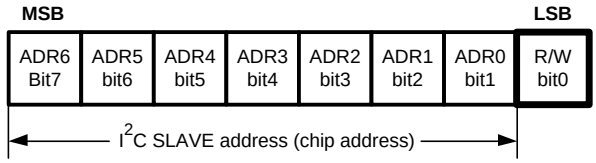

Figure 31. I²C Chip Address

Register changes take an effect at the SCL rising edge during the last ACK from slave.

Copyright © 2006–2013, Texas Instruments Incorporated

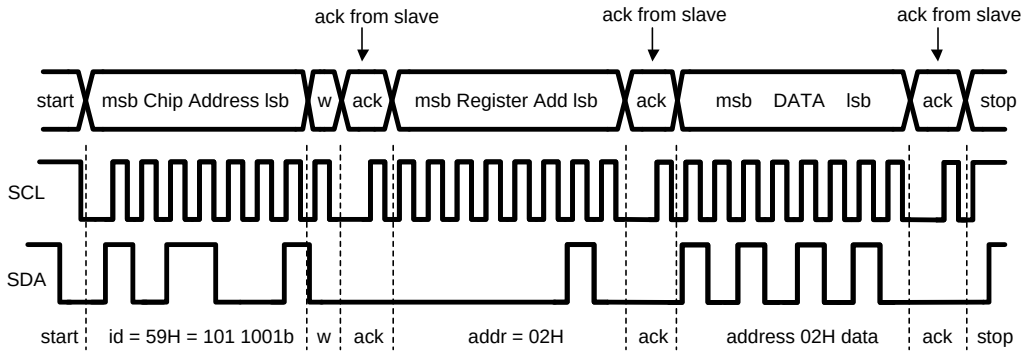

w = write (SDA = “0”)
r = read (SDA = “1”)
ack = acknowledge (SDA pulled down by either master or slave)
rs = repeated start
id = 7-bit chip address, 59H (101 1001b) for LP5526.

Figure 32. I²C Write Cycle

When a READ function is to be accomplished, a WRITE function must precede the READ function, as shown in the Read Cycle waveform.

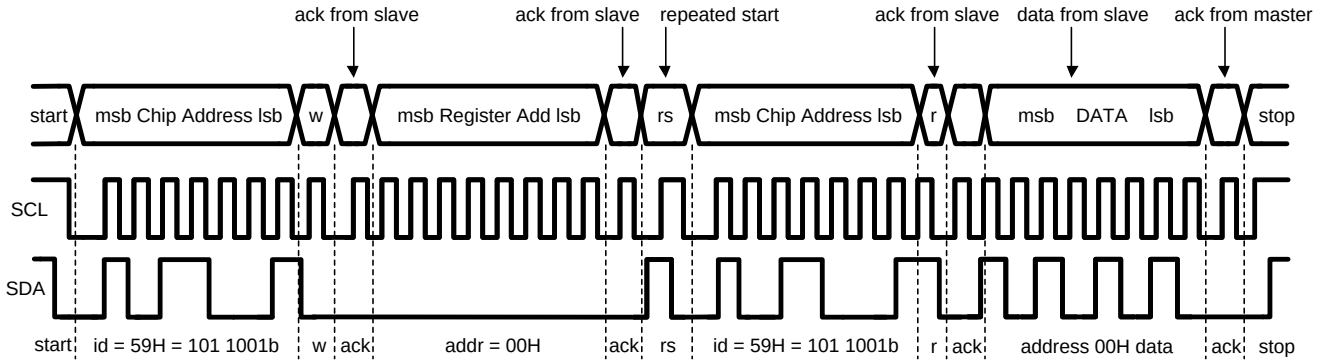

Figure 33. I²C Read Cycle

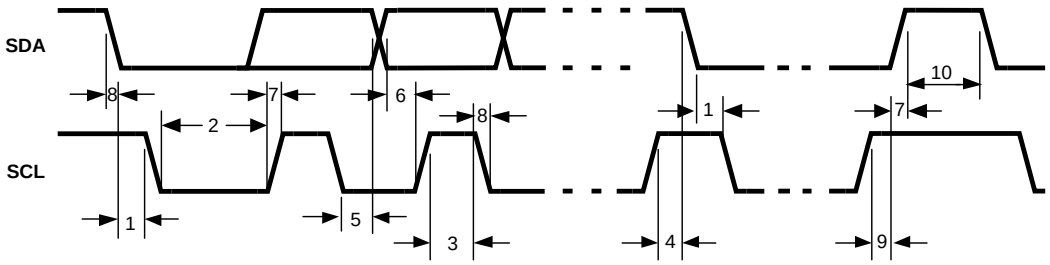

Figure 34. I²C Timing Diagram

I^2C TIMING PARAMETERS ($V_{DD1,2}$ = 3.0 to 4.5V, V_{DDIO} = 1.8V to $V_{DD1,2}$)

Symbol	Parameter	Limit(1)		Unit
		Min	Max	
1	Hold time (repeated) START condition	0.6		µs
2	Clock low time	1.3		µs
3	Clock high time	600		ns
4	Setup time for a repeated START condition	600		ns
5	Data hold time (output direction, delay generated by LP5526)	300	900	ns
5	Data hold time (input direction, delay generated by master)	0	900	ns
6	Data setup time	100		ns
7	Rise time of SDA and SCL	$20+0.1C_b$	300	ns
8	Fall time of SDA and SCL	$15+0.1C_b$	300	ns
9	Setup time for STOP condition	600		ns
10	Bus free time between a STOP and a START condition	1.3		µs
C_b	Capacitive load for each bus line	10	200	pF

(1) Data specified by design

Recommended External Components

OUTPUT CAPACITOR, C_{OUT}

The output capacitor C_{OUT} directly affects the magnitude of the output ripple voltage. In general, the higher the value of C_{OUT}, the lower the output ripple magnitude. Multilayer ceramic capacitors with low ESR are the best choice. At the lighter loads, the low ESR ceramics offer a much lower V_{OUT} ripple that the higher ESR tantalums of the same value. At the higher loads, the ceramics offer a slightly lower V_{OUT} ripple magnitude than the tantalums of the same value. However, the dv/dt of the V_{OUT} ripple with the ceramics is much lower that the tantalums under all load conditions. Capacitor voltage rating must be sufficient, 25V or greater is recommended. Examples of suitable capacitors are: TDK C3216X5R1E475K, Panasonic ECJ3YB1E475K, ECJMFB1E475K and ECJ4YB1E475K.

Some ceramic capacitors, especially those in small packages, exhibit a strong capacitance reduction with the increased applied voltage (DC bias effect). The capacitance value can fall below half of the nominal capacitance. Too low output capacitance can make the boost converter unstable. Output capacitors DC bias effect should be better than –50% at 20V.

INPUT CAPACITOR, C_{IN}

The input capacitor C_{IN} directly affects the magnitude of the input ripple voltage and to a lesser degree the V_{OUT} ripple. A higher value C_{IN} will give a lower V_{IN} ripple. Capacitor voltage rating must be sufficient, 10V or greater is recommended.

OUTPUT DIODE, D_1

A schottky diode should be used for the output diode. Peak repetitive current should be greater than inductor peak current (1500mA) to ensure reliable operation. Schottky diodes with a low forward drop and fast switching speeds are ideal for increasing efficiency in portable applications. Choose a reverse breakdown voltage of the schottky diode significantly larger (~30V) than the output voltage. Do not use ordinary rectifier diodes, since slow switching speeds and long recovery times cause the efficiency and the load regulation to suffer. Examples of suitable diodes are: Central Semiconductor CMMSH1-40, Infineon BAS52-02V.

EMI FILTER COMPONENTS C_{SW}, R_{SW}

EMI filter (R_{SW} and C_{SW}) on the SW pin can be used to suppress EMI caused by fast switching. These components should be as near as possible to the SW pin to ensure reliable operation. 50V or greater voltage rating is recommended for capacitor.

Copyright © 2006–2013, Texas Instruments Incorporated

INDUCTOR, L_1

A 10uH shielded inductor is suggested for LP5526 boost converter. The inductor should have a saturation current rating higher than the RMS current it will experience during circuit operation (1300mA). Less than 300mΩ ESR is suggested for high efficiency and sufficient output current. Open core inductors cause flux linkage with circuit components and interfere with the normal operation of the circuit. This should be avoided. For high efficiency, choose an inductor with a high frequency core material such as ferrite to reduce the core losses. To minimize radiated noise, use a toroid, pot core or shielded core inductor. The inductor should be connected to the SW pin as close to the IC as possible. Examples of suitable inductors are: TDK SLF6028T-100M1R3, Coilcraft MSS6122-103MLB.

LIST OF RECOMMENDED EXTERNAL COMPONENTS

Symbol	Symbol explanation	Value	Unit	Type
C_{VDD}	C between VDD1,2 and GND	100	nF	Ceramic, X7R / X5R
C_{VDDIO}	C between VDDIO and GND	100	nF	Ceramic, X7R / X5R
C_{VDDA}	C between VDDA and GND	1	µF	Ceramic, X7R / X5R
C_{OUT}	C between FB and GND	2 x 4.7 or 1 x 10	µF	Ceramic, X7R / X5R, tolerance +/- 10%
	Maximum DC bias effect at 20V	-50	%	
C_{IN}	C between battery voltage and GND	10	µF	Ceramic, X7R / X5R
L_1	L between SW and V_{BAT}	10	µH	Shielded inductor, low ESR
	Saturation current	1300	mA	
C_{VREF}	C between V_{REF} and GND	100	nF	Ceramic, X7R / X5R
R_{RGB}	R between I_{RGB} and GND	2.4	kΩ	±1%
R_{RT}	R between I_{RT} and GND	82	kΩ	±1%
D_1	Rectifying diode (Vf at maximum load)	0.3-0.5	V	Schottky diode
	Reverse voltage	30	V	
	Repetitive peak current	1500	mA	
C_{SW}	C in EMI filter	100	pF	Ceramic, X7R / X5R, 50V
R_{SW}	R in EMI filter	390	Ω	±1%
LEDs		User Defined		

Note: See Application Note AN-1442 "Design and Programming Examples for Lighting Management Unit LP5526" SNVA145 for more information on how to design with LP5526

Table 11. LP5526 Control Register Names and Default Values

ADDR (HEX)	REGISTER	D7	D6	D5	D4	D3	D2	D1	D0
00	Control Register	RGB_PWM	EN_RGB	CC_SW		RSW	GSW	BSW	
		0	0	1		0	0	0	
01	RGB	COLOR[3:0]				BRIGHT[2:0]			OVL
		0	0	0	0	0	0	0	0
02	RGB max current	SAFETY_SET		IR[1:0]		IG[1:0]		IB[1:0]	
		0		0	0	0	0	0	0
03	WLED Control			SLOPE	FADE_SEL	EN_FADE	DISPL	EN_MAIN	EN_SUB
				0	0	0	0	0	0
04	MAIN Current	MAIN[7:0]							
		0	0	0	0	0	0	0	0
05	SUB Current	SUB[7:0]							
		0	0	0	0	0	0	0	0
06	GPIO Control				EN_PWM_PIN		OEN[2:0]		
					0		0	0	0
07	GPIO Data						DATA[2:0]		
							0	0	0
0B	Enables		NSTBY	EN_BOOST		EN_FLASH	EN_AUTOLOAD		
			0	0		0	1		
0D	Boost Output	BOOST[7:0]							
		0	0	0	0	1	0	0	0
2B	PWM Enable	EN_SAFETY_R	EN_SAFETY_G	EN_SAFETY_B	EN_EXT_R_PWM	EN_EXT_G_PWM	EN_EXT_B_PWM	EN_MAIN_PWM	EN_SUB_PWM
		0	0	0	0	0	0	0	0

LP5526 Register Bit Explanations

Each register is shown with a key indicating the accessibility of the each individual bit, and the initial condition:

Table 12. Register Bit Accessibility and Initial Condition

Key	Bit Accessibility
RW	Read/write
R	Read only
–0,–1	Condition after POR

Copyright © 2006–2013, Texas Instruments Incorporated

CONTROL REGISTER (00H) – RGB LEDS CONTROL REGISTER

D7	D6	D5	D4	D3	D2	D1	D0
RGB_PWM	**EN_RGB**	**CC_SW**		**RSW**	**GSW**	**BSW**	
RW - 0	RW - 0	RW - 1	R - 0	RW - 0	RW - 0	RW - 0	R - 0

RGB_PWM	Bit 7	0 - Internal RGB PWM control disabled 1 - Internal RGB PWM control enabled
EN_RGB	Bit 6	0 – RGB outputs disabled 1 – RGB outputs enabled
CC_SW	Bit 5	0 – Constant current sink mode 1 – Switch mode
RSW	Bit 3	0 – RLED disabled 1 – RLED enabled
GSW	Bit 2	0 – GLED disabled 1 – GLED enabled
BSW	Bit 1	0 – BLED disabled 1 – BLED enabled

RGB (01H) – RGB COLOR AND BRIGHTNESS CONTROL REGISTER

D7	D6	D5	D4	D3	D2	D1	D0
COLOR[3:0]				**BRIGHT[2:0]**			**OVL**
RW - 0	RW - 0	RW - 0	RW - 0	RW - 0	RW - 0	RW - 0	RW - 0

COLOR[3:0]	Bits 7-4	PWM color for RGB outputs
BRIGHT[2:0]	Bits 3-1	PWM brightness control for RGB outputs
OVL	Bit 0	0 – Overlapping mode disabled 1 – Overlapping mode enabled

RGB MAX CURRENT (02H) – MAXIMUM RGB CURRENT CONTROL REGISTER

D7	D6	D5	D4	D3	D2	D1	D0
SAFETY_SET		**IR[1:0]**		**IG[1:0]**		**IB[1:0]**	
R - 0	R - 0	RW - 0	RW - 0	RW - 0	RW - 0	RW - 0	RW - 0

SAFETY_SET	Bit 7	0 – safety function not activated 1 – safety function activated
IR[1:0]	Bits 5-4	RLED maximum current
IG[1:0]	Bits 3-2	GLED maximum current
IB[1:0]	Bits 1-0	BLED maximum current

Table 13. Maximum Current for RGB driver

IR,IG,IB[1:0]	Maximum Output Current
00	$0.25 \times I_{MAX}$
01	$0.50 \times I_{MAX}$
10	$0.75 \times I_{MAX}$
11	$1.00 \times I_{MAX}$

WLED CONTROL (03H) – WLED CONTROL REGISTER

D7	D6	D5	D4	D3	D2	D1	D0
		SLOPE	**FADE_SEL**	**EN_FADE**	**DISPL**	**EN_MAIN**	**EN_SUB**
R - 0	R - 0	RW - 0	RW - 0	RW - 0	RW - 0	RW - 0	RW - 0

SLOPE	Bit 5	0 – fade execution time 0.65 sec (full scale) 1 – fade execution time 1.3 sec (full scale)
FADE_SEL	Bit 4	0 – fade control for MAIN 1 – fade control for SUB
EN_FADE	Bit 3	0 – automatic fade disabled 1 – automatic fade enabled
DISPL	Bit 2	0 - MAIN and SUB individual control 1 - MAIN and SUB controlled with MAIN DAC
EN_MAIN	Bit 1	0 – MAIN output disabled 1 – MAIN output enabled
EN_SUB	Bit 0	0 – SUB output disabled 1 – SUB output enabled

MAIN CURRENT (04H) – MAIN CURRENT CONTROL REGISTER

D7	D6	D5	D4	D3	D2	D1	D0
MAIN[7:0]							
RW - 0	RW - 0	RW - 0	RW - 0	RW - 0	RW - 0	RW - 0	RW - 0

SUB CURRENT (05H) – SUB CURRENT CONTROL REGISTER

D7	D6	D5	D4	D3	D2	D1	D0
SUB[7:0]							
RW - 0	RW - 0	RW - 0	RW - 0	RW - 0	RW - 0	RW - 0	RW - 0

Table 14. MAIN, SUB Current Adjustment

MAIN[7:0], SUB[7:0]	Typical Driver Current (mA)
0000 0000	0
0000 0001	0.1
0000 0010	0.2
0000 0011	0.3
0000 0100	0.4
…	…
1111 1101	25.3
1111 1110	25.4
1111 1111	25.5

GPIO CONTROL (06H) – GPIO CONTROL REGISTER

D7	D6	D5	D4	D3	D2	D1	D0
			EN_PWM_PIN		**OEN[2:0]**		
R - 0	R - 0	R - 0	RW - 0	R - 0	RW - 0	RW - 0	RW - 0

EN_PWM_PIN	Bit 4	0 – External PWM pin disabled 1 – External PWM pin enabled
OEN[2:0]	Bits 2-0	0 – GPIO pin set as a input 1 – GPIO pin set as a output

Copyright © 2006–2013, Texas Instruments Incorporated

GPIO DATA (07H) – GPIO DATA REGISTER

D7	D6	D5	D4	D3	D2	D1	D0
					DATA[2:0]		
R - 0	R - 0	R - 0	R - 0	R - 0	RW - 0	RW - 0	RW - 0

DATA[2:0]	Bits 2-0	GPIO data register bits

ENABLES (0BH) – ENABLES REGISTER

D7	D6	D5	D4	D3	D2	D1	D0
	NSTBY	**EN_BOOST**		**EN_FLASH**	**EN_AUTOLOAD**		
R - 0	RW - 0	RW - 0	R - 0	RW - 0	RW - 1	R - 0	R - 0

NSTBY	Bit 6	0 – LP5526 standby mode 1 – LP5526 active mode
EN_BOOST	Bit 5	0 – Boost converter disabled 1 – Boost converter enabled
EN_FLASH	Bit 3	0 – Flash function disabled 1 – Flash function enabled
EN_AUTOLOAD	Bit 2	0 – Boost active load disabled 1 – Boost active load enabled

BOOST OUTPUT (0DH) – BOOST OUTPUT VOLTAGE CONTROL REGISTER

D7	D6	D5	D4	D3	D2	D1	D0
BOOST[7:0]							
RW - 0	RW - 0	RW - 0	RW - 0	RW - 1	RW - 0	RW - 0	RW - 0

Table 15. BOOST Output Voltage Adjustment

BOOST[7:0]	Typical Boost Output Voltage (V)
0000 1000	8.00
0000 1001	9.00
0000 1010	10.00
0000 1011	11.00
0000 1100	12.00
0000 1101	13.00
0000 1110	14.00
0000 1111	15.00
0001 0000	16.00
0001 0001	17.00
0001 0010	18.00
0001 0011	19.00
0001 0100	20.00

Copyright © 2006–2013, Texas Instruments Incorporated

PWM ENABLE (2BH) – EXTERNAL PWM CONTROL REGISTER

D7	D6	D5	D4	D3	D2	D1	D0
EN_SAFETY_R	**EN_SAFETY_G**	**EN_SAFETY_B**	**EN_EXT R_PWM**	**EN_EXT G_PWM**	**EN_EXT B_PWM**	**EN_MAIN PWM**	**EN_SUB PWM**
RW - 0	RW - 0	RW - 0	RW - 0	RW - 0	RW - 0	RW - 0	RW - 0

EN_SAFETY_R	Bit 7	0 – Safety function for RLED disabled 1 – Safety function for RLED enabled
EN_SAFETY_G	Bit 6	0 – Safety function for GLED disabled 1 – Safety function for GLED enabled
EN_SAFETY_B	Bit 5	0 – Safety function for BLED disabled 1 – Safety function for BLED enabled
EN_EXT_R_PWM	Bit 4	0 – External PWM control for RLED disabled 1 – External PWM control for RLED enabled
EN_EXT_G_PWM	Bit 3	0 – External PWM control for GLED disabled 1 – External PWM control for GLED enabled
EN_EXT_B_PWM	Bit 2	0 – External PWM control for BLED disabled 1 – External PWM control for BLED enabled
EN_EXT_MAIN_PWM	Bit 1	0 – External PWM control for MAIN disabled 1 – External PWM control for MAIN enabled
EN_EXT_SUB_PWM	Bit 0	0 – External PWM control for SUB disabled 1 – External PWM control for SUB enabled

Copyright © 2006–2013, Texas Instruments Incorporated

REVISION HISTORY

Changes from Revision C (March 2013) to Revision D	Page
• Changed layout of National Data Sheet to TI format	34

PACKAGING INFORMATION

Orderable Device	Status (1)	Package Type	Package Drawing	Pins	Package Qty	Eco Plan (2)	Lead/Ball Finish (6)	MSL Peak Temp (3)	Op Temp (°C)	Device Marking (4/5)	Samples
LP5526TL/NOPB	ACTIVE	DSBGA	YZR	25	250	Green (RoHS & no Sb/Br)	SNAGCU	Level-1-260C-UNLIM	-30 to 85	5526	Samples

(1) The marketing status values are defined as follows:
ACTIVE: Product device recommended for new designs.
LIFEBUY: TI has announced that the device will be discontinued, and a lifetime-buy period is in effect.
NRND: Not recommended for new designs. Device is in production to support existing customers, but TI does not recommend using this part in a new design.
PREVIEW: Device has been announced but is not in production. Samples may or may not be available.
OBSOLETE: TI has discontinued the production of the device.

(2) Eco Plan - The planned eco-friendly classification: Pb-Free (RoHS), Pb-Free (RoHS Exempt), or Green (RoHS & no Sb/Br) - please check http://www.ti.com/productcontent for the latest availability information and additional product content details.
TBD: The Pb-Free/Green conversion plan has not been defined.
Pb-Free (RoHS): TI's terms "Lead-Free" or "Pb-Free" mean semiconductor products that are compatible with the current RoHS requirements for all 6 substances, including the requirement that lead not exceed 0.1% by weight in homogeneous materials. Where designed to be soldered at high temperatures, TI Pb-Free products are suitable for use in specified lead-free processes.
Pb-Free (RoHS Exempt): This component has a RoHS exemption for either 1) lead-based flip-chip solder bumps used between the die and package, or 2) lead-based die adhesive used between the die and leadframe. The component is otherwise considered Pb-Free (RoHS compatible) as defined above.
Green (RoHS & no Sb/Br): TI defines "Green" to mean Pb-Free (RoHS compatible), and free of Bromine (Br) and Antimony (Sb) based flame retardants (Br or Sb do not exceed 0.1% by weight in homogeneous material)

(3) MSL, Peak Temp. - The Moisture Sensitivity Level rating according to the JEDEC industry standard classifications, and peak solder temperature.

(4) There may be additional marking, which relates to the logo, the lot trace code information, or the environmental category on the device.

(5) Multiple Device Markings will be inside parentheses. Only one Device Marking contained in parentheses and separated by a "~" will appear on a device. If a line is indented then it is a continuation of the previous line and the two combined represent the entire Device Marking for that device.

(6) Lead/Ball Finish - Orderable Devices may have multiple material finish options. Finish options are separated by a vertical ruled line. Lead/Ball Finish values may wrap to two lines if the finish value exceeds the maximum column width.

Important Information and Disclaimer: The information provided on this page represents TI's knowledge and belief as of the date that it is provided. TI bases its knowledge and belief on information provided by third parties, and makes no representation or warranty as to the accuracy of such information. Efforts are underway to better integrate information from third parties. TI has taken and continues to take reasonable steps to provide representative and accurate information but may not have conducted destructive testing or chemical analysis on incoming materials and chemicals. TI and TI suppliers consider certain information to be proprietary, and thus CAS numbers and other limited information may not be available for release.

In no event shall TI's liability arising out of such information exceed the total purchase price of the TI part(s) at issue in this document sold by TI to Customer on an annual basis.

TAPE AND REEL INFORMATION

REEL DIMENSIONS

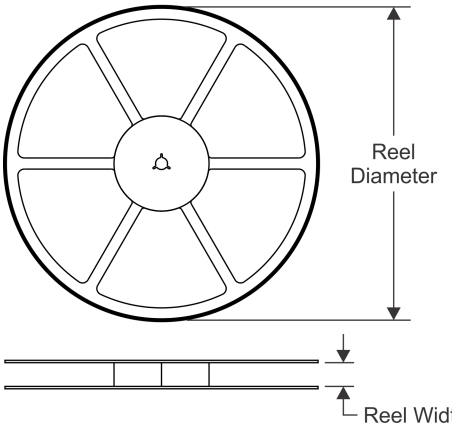

TAPE DIMENSIONS

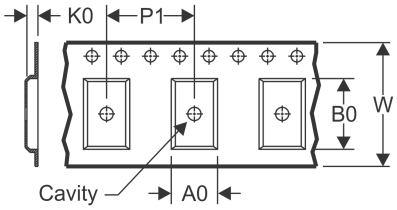

A0	Dimension designed to accommodate the component width
B0	Dimension designed to accommodate the component length
K0	Dimension designed to accommodate the component thickness
W	Overall width of the carrier tape
P1	Pitch between successive cavity centers

QUADRANT ASSIGNMENTS FOR PIN 1 ORIENTATION IN TAPE

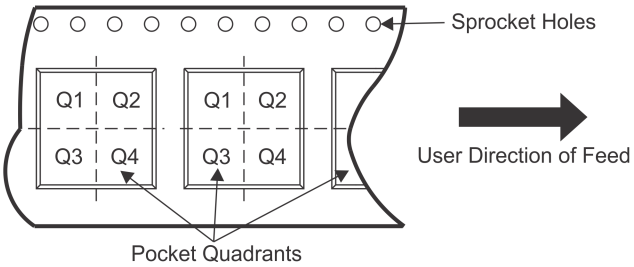

*All dimensions are nominal

Device	Package Type	Package Drawing	Pins	SPQ	Reel Diameter (mm)	Reel Width W1 (mm)	A0 (mm)	B0 (mm)	K0 (mm)	P1 (mm)	W (mm)	Pin1 Quadrant
LP5526TL/NOPB	DSBGA	YZR	25	250	178.0	8.4	2.69	2.69	0.76	4.0	8.0	Q1

TAPE AND REEL BOX DIMENSIONS

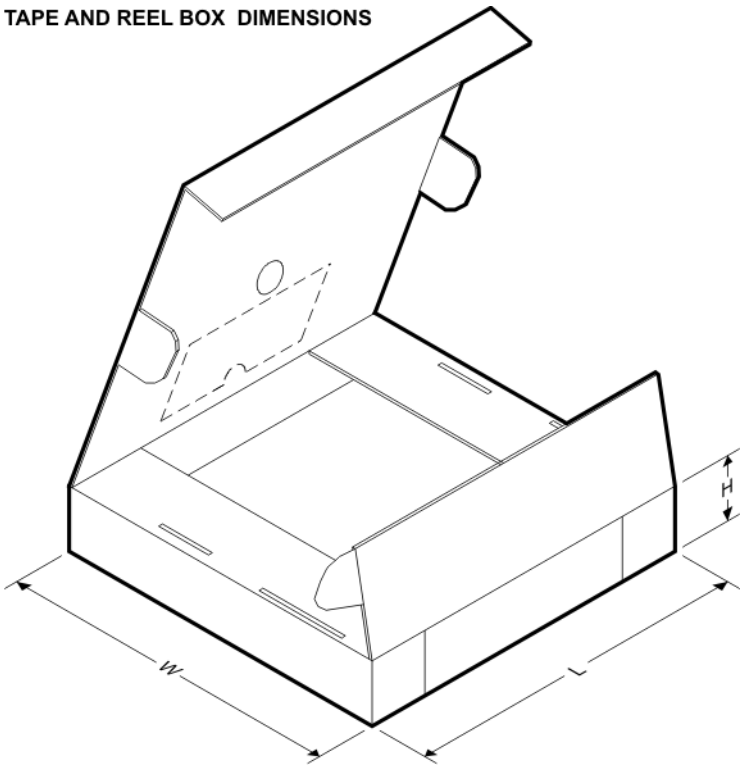

*All dimensions are nominal

Device	Package Type	Package Drawing	Pins	SPQ	Length (mm)	Width (mm)	Height (mm)
LP5526TL/NOPB	DSBGA	YZR	25	250	210.0	185.0	35.0

YZR0025

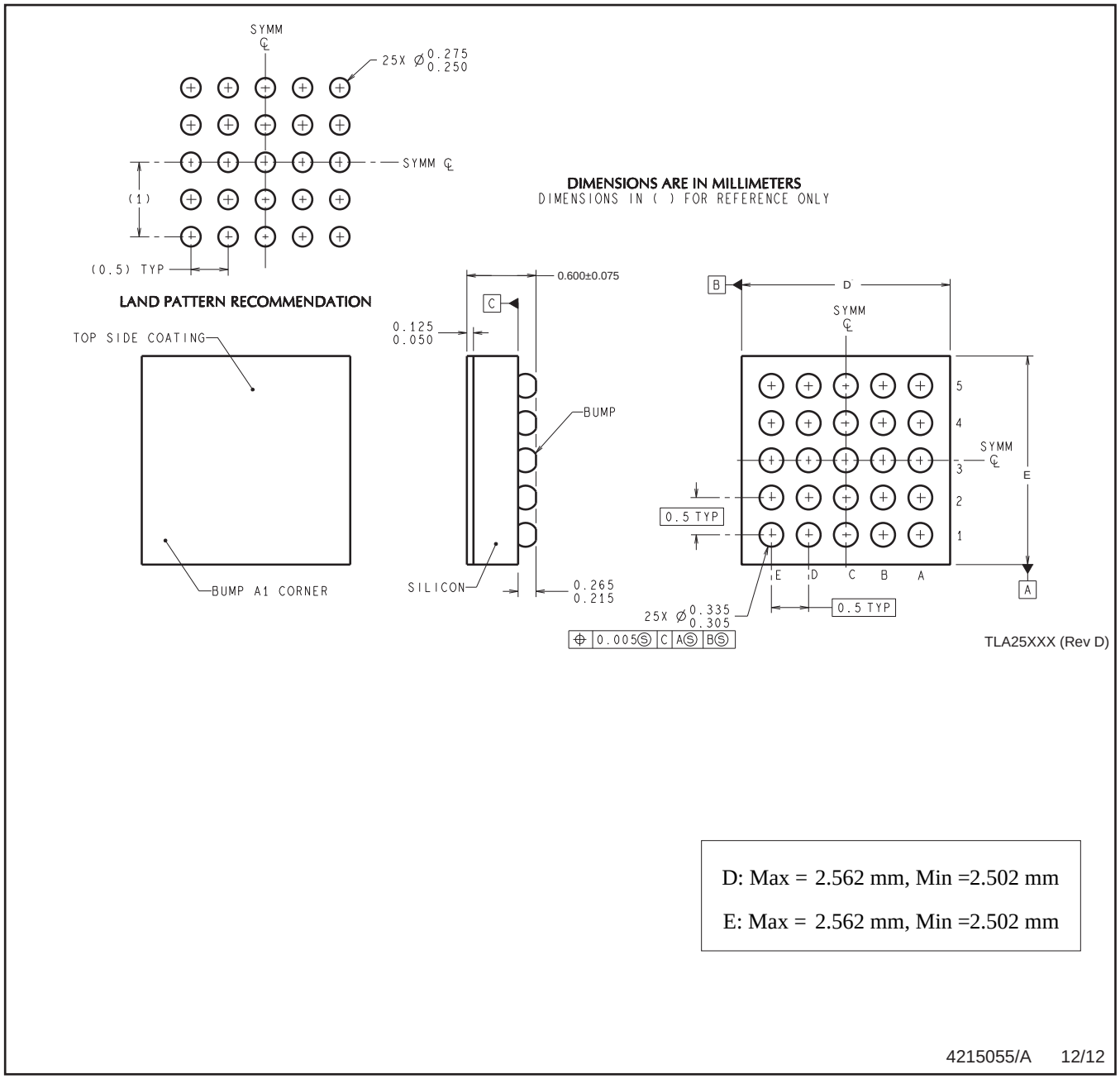

D: Max = 2.562 mm, Min =2.502 mm

E: Max = 2.562 mm, Min =2.502 mm

4215055/A 12/12

NOTES: A. All linear dimensions are in millimeters. Dimensioning and tolerancing per ASME Y14.5M-1994.
B. This drawing is subject to change without notice.

IMPORTANT NOTICE

Texas Instruments Incorporated and its subsidiaries (TI) reserve the right to make corrections, enhancements, improvements and other changes to its semiconductor products and services per JESD46, latest issue, and to discontinue any product or service per JESD48, latest issue. Buyers should obtain the latest relevant information before placing orders and should verify that such information is current and complete. All semiconductor products (also referred to herein as “components”) are sold subject to TI’s terms and conditions of sale supplied at the time of order acknowledgment.

TI warrants performance of its components to the specifications applicable at the time of sale, in accordance with the warranty in TI’s terms and conditions of sale of semiconductor products. Testing and other quality control techniques are used to the extent TI deems necessary to support this warranty. Except where mandated by applicable law, testing of all parameters of each component is not necessarily performed.

TI assumes no liability for applications assistance or the design of Buyers’ products. Buyers are responsible for their products and applications using TI components. To minimize the risks associated with Buyers’ products and applications, Buyers should provide adequate design and operating safeguards.

TI does not warrant or represent that any license, either express or implied, is granted under any patent right, copyright, mask work right, or other intellectual property right relating to any combination, machine, or process in which TI components or services are used. Information published by TI regarding third-party products or services does not constitute a license to use such products or services or a warranty or endorsement thereof. Use of such information may require a license from a third party under the patents or other intellectual property of the third party, or a license from TI under the patents or other intellectual property of TI.

Reproduction of significant portions of TI information in TI data books or data sheets is permissible only if reproduction is without alteration and is accompanied by all associated warranties, conditions, limitations, and notices. TI is not responsible or liable for such altered documentation. Information of third parties may be subject to additional restrictions.

Resale of TI components or services with statements different from or beyond the parameters stated by TI for that component or service voids all express and any implied warranties for the associated TI component or service and is an unfair and deceptive business practice. TI is not responsible or liable for any such statements.

Buyer acknowledges and agrees that it is solely responsible for compliance with all legal, regulatory and safety-related requirements concerning its products, and any use of TI components in its applications, notwithstanding any applications-related information or support that may be provided by TI. Buyer represents and agrees that it has all the necessary expertise to create and implement safeguards which anticipate dangerous consequences of failures, monitor failures and their consequences, lessen the likelihood of failures that might cause harm and take appropriate remedial actions. Buyer will fully indemnify TI and its representatives against any damages arising out of the use of any TI components in safety-critical applications.

In some cases, TI components may be promoted specifically to facilitate safety-related applications. With such components, TI’s goal is to help enable customers to design and create their own end-product solutions that meet applicable functional safety standards and requirements. Nonetheless, such components are subject to these terms.

No TI components are authorized for use in FDA Class III (or similar life-critical medical equipment) unless authorized officers of the parties have executed a special agreement specifically governing such use.

Only those TI components which TI has specifically designated as military grade or “enhanced plastic” are designed and intended for use in military/aerospace applications or environments. Buyer acknowledges and agrees that any military or aerospace use of TI components which have ***not*** been so designated is solely at the Buyer's risk, and that Buyer is solely responsible for compliance with all legal and regulatory requirements in connection with such use.

TI has specifically designated certain components as meeting ISO/TS16949 requirements, mainly for automotive use. In any case of use of non-designated products, TI will not be responsible for any failure to meet ISO/TS16949.

Products		**Applications**	
Audio	www.ti.com/audio	Automotive and Transportation	www.ti.com/automotive
Amplifiers	amplifier.ti.com	Communications and Telecom	www.ti.com/communications
Data Converters	dataconverter.ti.com	Computers and Peripherals	www.ti.com/computers
DLP® Products	www.dlp.com	Consumer Electronics	www.ti.com/consumer-apps
DSP	dsp.ti.com	Energy and Lighting	www.ti.com/energy
Clocks and Timers	www.ti.com/clocks	Industrial	www.ti.com/industrial
Interface	interface.ti.com	Medical	www.ti.com/medical
Logic	logic.ti.com	Security	www.ti.com/security
Power Mgmt	power.ti.com	Space, Avionics and Defense	www.ti.com/space-avionics-defense
Microcontrollers	microcontroller.ti.com	Video and Imaging	www.ti.com/video
RFID	www.ti-rfid.com		
OMAP Applications Processors	www.ti.com/omap	**TI E2E Community**	e2e.ti.com
Wireless Connectivity	www.ti.com/wirelessconnectivity		

Mailing Address: Texas Instruments, Post Office Box 655303, Dallas, Texas 75265
Copyright © 2015, Texas Instruments Incorporated