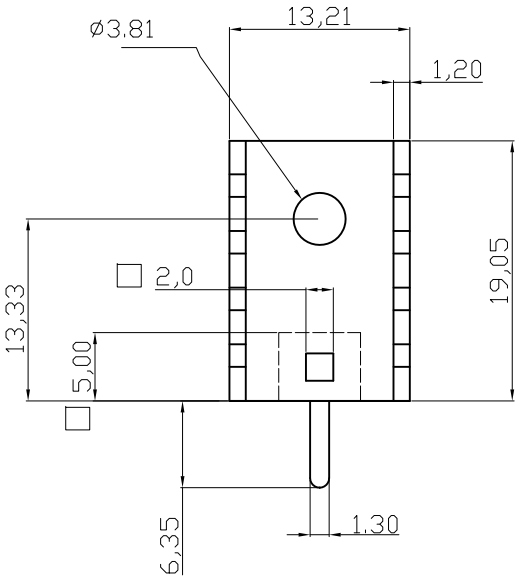

PIN MATERIAL:BRASS TIN PLATED

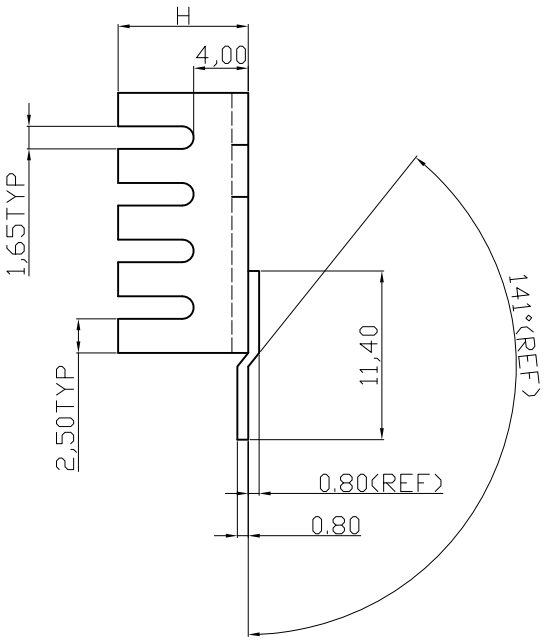

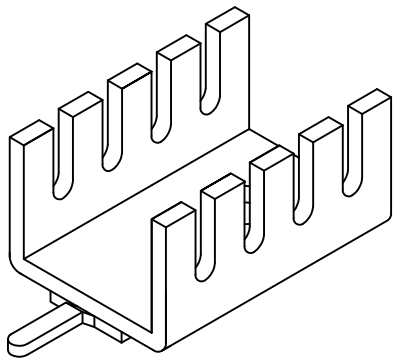

Notes
Material : ALUMINUM 1100 T=1.2
Finished : Black anodize

	Option	H	Thermal resistance
④	V7237A	6.35	28
	V7237B	9.53	24
	V7237C	12.70	21

RoHS compliant
Unit: mm

Scale	FREE
TOLERANCE	
UNIT	±0.2
DIM	TOL
X.°	±X°
X.X°	±X°
Angle	TOL

Id.	Modification	Date	Name
⑤	Change production plant	31.10.2013	Amy
④	Add P/N	21.10.2013	A.Plate
③	Modify drawing layout	10.03.2010	Alex
②	Update	11.08.2009	Dean
①	Drawn	08.03.2002	Hellwig

	Date	Name
Drawn	08.03.2002	Hellwig
Approved	31.10.2013	Andy

ASSMANN WSW components

Customer-No.

ASSMANN WSW-No. V7237x

Drawing-No. ASS 0513 HS

rev05

Replace

Sheet