LP5523 Programmable 9-Output LED Driver

Check for Samples: LP5523

FEATURES

- **Three Independent Program Execution Engines, 9 Programmable Outputs with 25.5 mA Full-Scale Current, 8-Bit Current Setting Resolution and 12-Bit PWM Control Resolution**
- **Adaptive High-Efficiency 1x/1.5x Fractional Charge Pump - Efficiency Up to 94%**
- **LED Drive Efficiency Up to 93%**
- **Charge Pump with Soft Start and Over-Current/Short-Circuit Protection**
- **Built-in LED Test**
- **200 nA Typical Standby Current**
- **Automatic Power Save Mode; I_{VDD} = 10 µA (typ.)**
- **Two-Wire I^2C-Compatible Control Interface**
- **Flexible Instruction Set**
- **Large SRAM Program Memory**
- **Small Application Circuit**
- **Source (High-Side) Drivers**
- **Architecture Supports Color Control**

APPLICATIONS

- **Fun Lights and Indicator Lights**
- **LED Backlighting**
- **Haptic Feedback**
- **Programmable Current Source**

DESCRIPTION

The LP5523 is a 9-channel LED driver designed to produce lighting effects for mobile devices. A high-efficiency charge pump enables LED driving over full Li-Ion battery voltage range. The device is equipped with an internal program memory, which allows operation without processor control.

The LP5523 maintains excellent efficiency over a wide operating range by autonomously selecting the best charge pump gain based on LED forward voltage requirements. LP5523 is able to automatically enter power-save mode when LED outputs are not active, thus lowering idle current consumption down to 10 µA (typ).

Typical Application

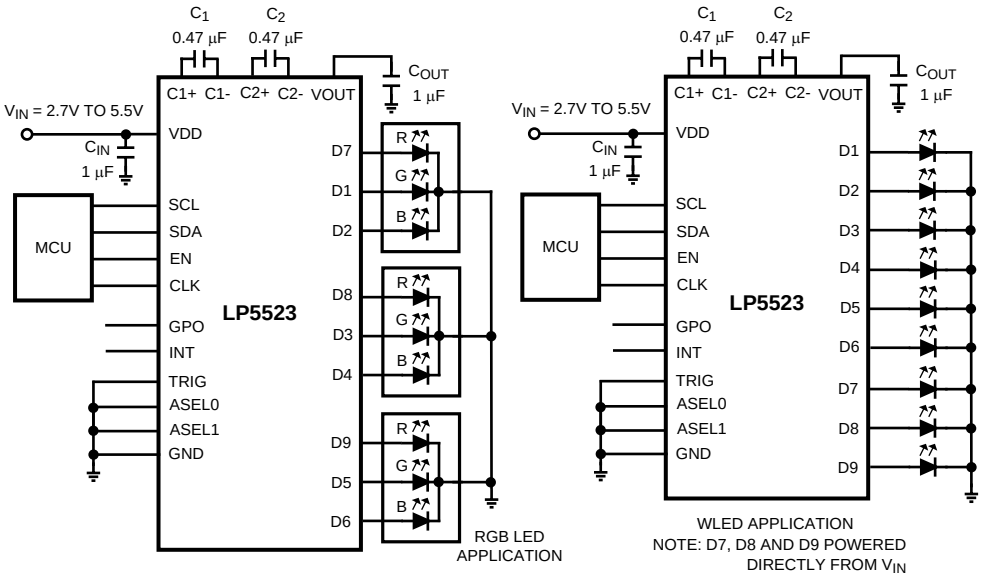

Please be aware that an important notice concerning availability, standard warranty, and use in critical applications of Texas Instruments semiconductor products and disclaimers thereto appears at the end of this data sheet.

All trademarks are the property of their respective owners.

PRODUCTION DATA information is current as of publication date. Products conform to specifications per the terms of the Texas Instruments standard warranty. Production processing does not necessarily include testing of all parameters.

Copyright © 2009–2013, Texas Instruments Incorporated

DESCRIPTION (CONTINUED)

The LP5523 has an I^2C-compatible control interface with four pin selectable addresses. The device has a flexible General Purpose Output (GPO), which can be used as a digital control pin for other devices. INT pin can be used to notify processor when a lighting sequence has ended (interrupt -function). Also, the device has a trigger input interface, which allows synchronization, for example, between multiple LP5523 devices.

The device requires only four small and low-cost ceramic capacitors. The LP5523 is available in a tiny 25-bump 2.27 mm x 2.27 mm x 0.60 mm DSBGA package (0.4 mm pitch).

Connection Diagrams

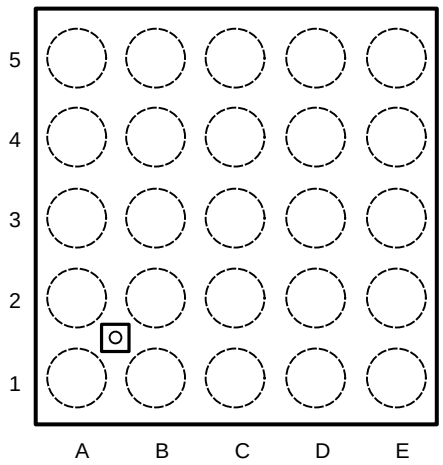

Figure 1. Thin DSBGA 25-bump Package Number YFQ0025LLA Top View

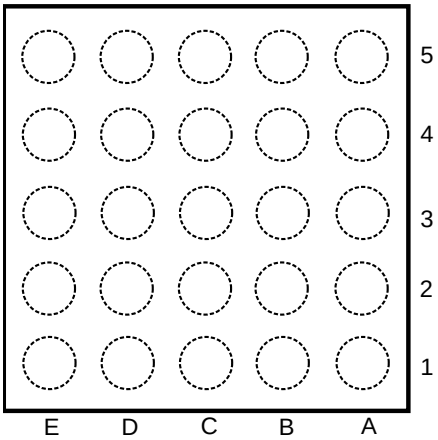

Figure 2. Thin DSBGA 25-bump Package Number YFQ0025LLA Bottom View

PIN DESCRIPTIONS (1)

Pin	Name	Type	Description
A1	D1	A	Current source output 1
A2	D2	A	Current source output 2
A3	VOUT	A	Charge pump output
A4	C2−	A	Flying capacitor 2 negative terminal
A5	C2+	A	Flying capacitor 2 positive terminal
B1	D3	A	Current source output 3
B2	D4	A	Current source output 4
B3	ASEL1	I	Serial interface address select input
B4	C1−	A	Flying capacitor 1 negative terminal
B5	C1+	A	Flying capacitor 1 positive terminal
C1	D5	A	Current source output 5
C2	D6	A	Current source output 6
C3	ASEL0	I	Serial interface address select input
C4	EN	I	Enable
C5	VDD	P	Input power supply
D1	D7	A	Current source output 7. Note: powered from VDD
D2	D8	A	Current source output 8. Note: powered from VDD
D3	INT	OD/O	Interrupt for microcontroller unit. Leave unconnected if not used

(1) **A:** Analog Pin **G:** Ground Pin **P:** Power Pin **I**: Input Pin **I/O:** Input/Output Pin **O:** Output Pin **OD:** Open Drain Pin

Copyright © 2009–2013, Texas Instruments Incorporated

PIN DESCRIPTIONS[1] (continued)

Pin	Name	Type	Description
D4	CLK	I	32 kHz clock input. Connect to ground if not used
D5	GND	G	Ground
E1	D9	A	Current source output 9. Note: powered from VDD
E2	GPO	O	General purpose output. Leave unconnected if not used
E3	TRIG	I/OD	Trigger. Connect to ground if not used
E4	SDA	I/OD	Serial interface data
E5	SCL	I	Serial interface clock

These devices have limited built-in ESD protection. The leads should be shorted together or the device placed in conductive foam during storage or handling to prevent electrostatic damage to the MOS gates.

Absolute Maximum Ratings [1][2][3]

VDD	−0.3V to +6.0V
Voltage on D1 to D9, C1−, C1+, C2−, C2+, VOUT	−0.3V to V_{DD} +0.3V with 6.0V max
Continuous Power Dissipation [4]	Internally Limited
Junction Temperature (T_{J-MAX})	125°C
Storage Temperature Range	−65°C to +150°C
Maximum Lead Temperature (Soldering)	[5]
ESD Rating Human Body Model: D1 to D9 Human Body Model: All Other Pins Machine Model: All Pins Charge Device Model: All Pins	 8kV [6] 2.5kV [6] 250V [7] 1000V [8]

(1) Absolute Maximum Ratings indicate limits beyond which damage to the device may occur, including inoperability and degradation of device reliability and/or performance. Functional operation of the device and/or non-degradation at the Absolute Maximum Ratings or other conditions beyond those indicated in the Recommended Operating Conditions is not implied. The recommended Operating Conditions indicate conditions at which the device is functional and the device should not be operated beyond such conditions.
(2) If Military/Aerospace specified devices are required, please contact the TI Sales Office/Distributors for availability and specifications.
(3) All voltages are with respect to the potential at the GND pin.
(4) Internal thermal shutdown circuitry protects the device from permanent damage. Thermal shutdown engages at T_J = 150°C (typ.) and disengages at T_J = 130°C (typ.).
(5) For detailed soldering specifications and information, please refer to STET Application Note AN1112 : DSBGA Wafer Level Chip Scale Package SNVA009.
(6) Human Body Model, applicable standard JESD22-A114C
(7) Machine Model, applicable standard JESD22- A115-A
(8) Charge Device Model, applicable standard JESD22A-C101

Recommended Operating Conditions [1][2]

V_{DD} Input Voltage Range	2.7V to 5.5V
Voltage on Logic Pins (Input or Output Pins)	0 to V_{DD}
Recommended Charge Pump Load Current	0 mA to 100 mA
Junction Temperature (T_J) Range	−30°C to +125°C
Ambient Temperature (T_A) Range [3]	−30°C to +85°C

(1) Absolute Maximum Ratings indicate limits beyond which damage to the device may occur, including inoperability and degradation of device reliability and/or performance. Functional operation of the device and/or non-degradation at the Absolute Maximum Ratings or other conditions beyond those indicated in the Recommended Operating Conditions is not implied. The recommended Operating Conditions indicate conditions at which the device is functional and the device should not be operated beyond such conditions.
(2) All voltages are with respect to the potential at the GND pin.
(3) In applications where high power dissipation and/or poor package thermal resistance is present, the maximum ambient temperature may have to be derated. Maximum ambient temperature (T_{A-MAX}) is dependent on the maximum operating junction temperature ($T_{J-MAX-OP}$ = 125°C), the maximum power dissipation of the device in the application (P_{D-MAX}), and the junction-to ambient thermal resistance of the part/package in the application (θ_{JA}), as given by the following equation: $T_{A-MAX} = T_{J-MAX-OP} - (\theta_{JA} \times P_{D-MAX})$.

Copyright © 2009–2013, Texas Instruments Incorporated

Thermal Properties

Junction-to-Ambient Thermal Resistance (θ_{JA}), YFQ0025LLA Package (1)		87°C/W

(1) Junction-to-ambient thermal resistance is highly application and board-layout dependent. In applications where high maximum power dissipation exists, special care must be paid to thermal dissipation issues in board design.

Electrical Characteristics (1)(2)(3)

Limits in standard typeface are for T_A = 25°C. Limits in **boldface** type apply over the operating ambient temperature range (−30°C < T_A < +85°C). Unless otherwise noted, specifications apply to the LP5523 Block Diagram with: V_{DD} = 3.6V, V_{EN} = 1.65V, C_{OUT} = 1.0 µF, C_{IN} = 1.0 µF, C_{1-2} = 0.47 µF. (4)

Symbol	Parameter	Condition	Min	Typ	Max	Units
I_{VDD}	Standby supply current	V_{EN} = 0V, CHIP_EN=0 (bit), external 32 kHz clock running or not running		0.2	**1**	µA
		CHIP_EN=0 (bit), external 32 kHz clock not running		1.0	**1.7**	µA
		CHIP_EN=0 (bit), external 32 kHz clock running		1.4	**2.3**	µA
	Normal Mode Supply Current	External 32 kHz clock running, charge pump and current source outputs disabled		0.6	**0.75**	mA
		Charge pump in 1x mode, no load, current source outputs disabled		0.8	**0.95**	mA
		Charge pump in 1.5x mode, no load, current source outputs disabled		1.8		mA
	Power Save Mode Supply Current	External 32 kHz clock running		10	**15**	µA
		Internal oscillator running		0.6	**0.75**	mA
f_{OSC}	Internal Oscillator Frequency Accuracy		−4 **−7**		+4 **+7**	%

(1) The Electrical characteristics tables list ensured specifications under the listed Recommended Conditions except as otherwise modified or specified by the Electrical Characteristics Conditions and/or Notes. Typical specifications are estimations only and are not ensured.
(2) All voltages are with respect to the potential at the GND pin.
(3) Min and Max limits are ensured by design, test, or statistical analysis.
(4) Low-ESR Surface-Mount Ceramic Capacitors (MLCCs) used in setting electrical characteristics.

Charge Pump Electrical Characteristics (1)(2)(3)

Symbol	Parameter	Condition	Min	Typ	Max	Units
R_{OUT}	Charge Pump Output Resistance	Gain = 1.5x Gain = 1x		3.5 1		Ω
f_{SW}	Switching Frequency			1.25		MHz
I_{GND}	Ground Current	Gain = 1.5x Gain = 1x		1.2 0.3		mA
t_{ON}	V_{OUT} Turn-On Time (4)	V_{DD} = 3.6V, I_{OUT} = 60 mA		100		µs

(1) The Electrical characteristics tables list ensured specifications under the listed Recommended Conditions except as otherwise modified or specified by the Electrical Characteristics Conditions and/or Notes. Typical specifications are estimations only and are not ensured.
(2) All voltages are with respect to the potential at the GND pin.
(3) Min and Max limits are ensured by design, test, or statistical analysis.
(4) Turn-on time is measured from the moment the charge pump is activated until the V_{OUT} crosses 90% of its target value.

Copyright © 2009–2013, Texas Instruments Incorporated

LED Driver Electrical Characteristics (1)(2)(3)

Symbol	Parameter	Condition	Min	Typ	Max	Units
$I_{LEAKAGE}$	Leakage Current (outputs D1 to D9)	PWM = 0%		0.1	1	µA
I_{MAX}	Maximum Source Current	Outputs D1 to D9		25.5		mA
I_{OUT}	Output Current Accuracy (4)	Output current set to 17.5 mA	−4 **−5**		+4 **+5**	%
I_{MATCH}	Matching (4)	Output current set to 17.5 mA		1	2.5	%
f_{LED}	LED Switching Frequency			312		Hz
V_{SAT}	Saturation Voltage (5)	Output current set to 17.5 mA		45	100	mV

(1) The Electrical characteristics tables list ensured specifications under the listed Recommended Conditions except as otherwise modified or specified by the Electrical Characteristics Conditions and/or Notes. Typical specifications are estimations only and are not ensured.
(2) All voltages are with respect to the potential at the GND pin.
(3) Min and Max limits are ensured by design, test, or statistical analysis.
(4) Output Current Accuracy is the difference between the actual value of the output current and programmed value of this current. Matching is the maximum difference from the average. For the constant current outputs on the part (D1 to D9), the following are determined: the maximum output current (MAX), the minimum output current (MIN), and the average output current of all outputs (AVG). Two matching numbers are calculated: (MAX-AVG)/AVG and (AVG-MIN)/AVG. The largest number of the two (worst case) is considered the matching figure. Note that some manufacturers have different definitions in use.
(5) Saturation voltage is defined as the voltage when the LED current has dropped 10% from the value measured at V_{OUT} – 1V.

LED Test Electrical Characteristics (1)(2)(3)

Symbol	Parameter	Condition	Min	Typ	Max	Units
LSB	Least Significant Bit			30		mV
E_{ABS}	Total Unadjusted Error (4)	V_{IN_TEST} = 0V to V_{DD}		<±3	±4	LSB
t_{CONV}	Conversion Time			2.7		ms
V_{IN_TEST}	DC Voltage Range		0		5	V

(1) The Electrical characteristics tables list ensured specifications under the listed Recommended Conditions except as otherwise modified or specified by the Electrical Characteristics Conditions and/or Notes. Typical specifications are estimations only and are not ensured.
(2) All voltages are with respect to the potential at the GND pin.
(3) Min and Max limits are ensured by design, test, or statistical analysis.
(4) Total unadjusted error includes offset, full-scale, and linearity errors.

Logic Interface Characteristics (1)(2)(3)

Symbol	Parameter	Condition	Min	Typ	Max	Units
Logic input EN						
V_{IL}	Input Low Level				**0.5**	V
V_{IH}	Input High Level		**1.2**			V
I_I	Input Current		**−1.0**		**1.0**	µA
t_{DELAY}	Input Delay (4)			2		µs
Logic input SCL, SDA, TRIG, CLK, ASEL0, ASEL1						
V_{IL}	Input Low Level				**0.2xV_{EN}**	V
V_{IH}	Input High Level		**0.8xV_{EN}**			V
I_I	Input Current		**−1.0**		**1.0**	µA
Logic output SDA, TRIG, INT						
V_{OL}	Output Low Level	I_{OUT} = 3 mA (pullup current)		0.3	**0.5**	V
I_L	Output Leakage Current	V_{OUT} = 2.8V			**1.0**	µA
Logic output GPO						
V_{OL}	Output Low Level	I_{OUT} = 3 mA		0.3	**0.5**	V
V_{OH}	Output High Level	I_{OUT} = −2 mA	**V_{DD} −0.5**	V_{DD} −0.3		

(1) The Electrical characteristics tables list ensured specifications under the listed Recommended Conditions except as otherwise modified or specified by the Electrical Characteristics Conditions and/or Notes. Typical specifications are estimations only and are not ensured.
(2) All voltages are with respect to the potential at the GND pin.
(3) Min and Max limits are ensured by design, test, or statistical analysis.
(4) The I^2C host should allow at least 500 µs before sending data to the LP5523 after the rising edge of the enable line.

Copyright © 2009–2013, Texas Instruments Incorporated

Logic Interface Characteristics (1)(2)(3) (continued)

Symbol	Parameter	Condition	Min	Typ	Max	Units
I_L	Output Leakage Current	V_{OUT} = 2.8V			**1.0**	µA

Recommended External Clock Source Conditions (1)(2)(3)(4)(5)

Symbol	Parameter	Condition	Min	Typ	Max	Units
Logic input CLK						
f_{CLK}	Clock Frequency			32.7		kHz
t_{CLKH}	High Time		6			µs
t_{CLKL}	Low Time		6			µs
t_r	Clock Rise Time	10% to 90%			2	µs
t_f	Clock Fall Time	90% to 10%			2	µs

(1) The Electrical characteristics tables list ensured specifications under the listed Recommended Conditions except as otherwise modified or specified by the Electrical Characteristics Conditions and/or Notes. Typical specifications are estimations only and are not ensured.
(2) All voltages are with respect to the potential at the GND pin.
(3) Min and Max limits are ensured by design, test, or statistical analysis.
(4) Specification is ensured by design and is not tested in production. V_{EN} = 1.65V to V_{DD}.
(5) The ideal external clock signal for the LP5523 is a 0V to V_{EN} 25% to 75% duty-cycle square wave. At frequencies above 32.7 kHz, program execution will be faster, and at frequencies below 32.7 kHz program execution will be slower.

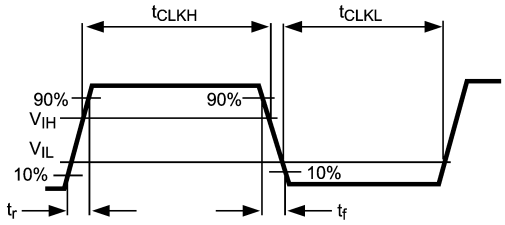

Serial Bus Timing Parameters (SDA, SCL) (1)(2)(3)(4)

Symbol	Parameter	Limit		Units
		Min	Max	
f_{SCL}	Clock Frequency		400	kHz
1	Hold Time (repeated) START Condition	0.6		µs
2	Clock Low Time	1.3		µs
3	Clock High Time	600		ns
4	Setup Time for a Repeated START Condition	600		ns
5	Data Hold Time	50		ns
6	Data Setup Time	100		ns
7	Rise Time of SDA and SCL	20+0.1 C_b	300	ns
8	Fall Time of SDA and SCL	15+0.1 C_b	300	ns
9	Set-up Time for STOP condition	600		ns
10	Bus Free Time between a STOP and a START Condition	1.3		µs
C_b	Capacitive Load Parameter for Each Bus Line. Load of One Picofarad Corresponds to One Nanosecond.	10	200	ns

(1) The Electrical characteristics tables list ensured specifications under the listed Recommended Conditions except as otherwise modified or specified by the Electrical Characteristics Conditions and/or Notes. Typical specifications are estimations only and are not ensured.
(2) All voltages are with respect to the potential at the GND pin.
(3) Min and Max limits are ensured by design, test, or statistical analysis.
(4) Specification is ensured by design and is not tested in production. V_{EN} = 1.65V to V_{DD}.

Copyright © 2009–2013, Texas Instruments Incorporated

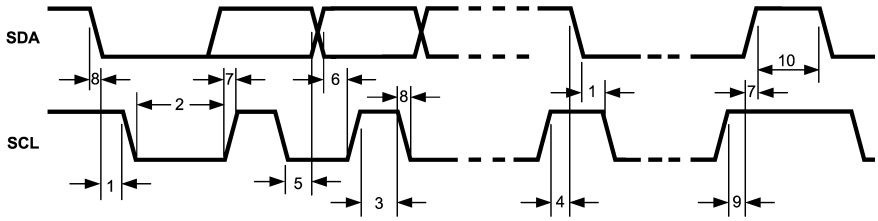
SDA
SCL
8
7
6
2
8
1
7
10
1
5
3
4
9

Typical Performance Characteristics

Unless otherwise specified: V_{DD} = 3.6V, C_{IN} = C_{OUT} = 1.0 µF, C_1 = C_2 = 0.47 µF, T_A = 25°C. (1)

Charge Pump 1.5x Efficiency vs Load Current

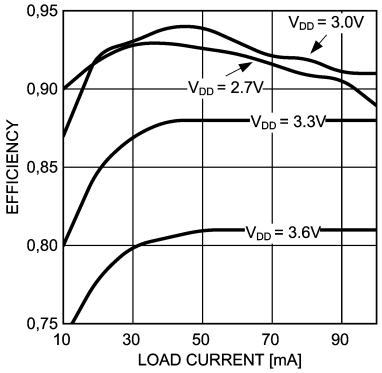

Figure 3.

Output Voltage of the Charge Pump (1.5x) as a Function of Load Current at Four Input Voltage Levels

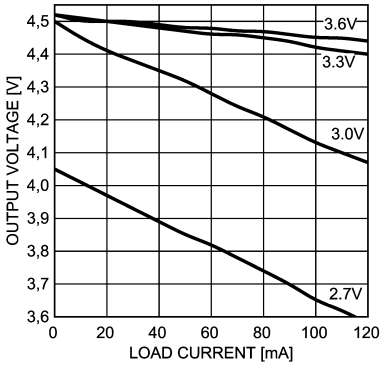

Figure 4.

Gain Change Hysteresis Loop at Factory Settings; 6 x 1,0 mA Load (6 Nichia NSCW100 WLEDs on D1 to D6)

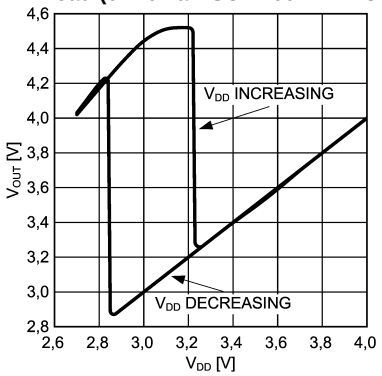

Figure 5.

Effect of Adaptive Hysteresis on the Widht of the Hysteresis Loop; Load = 6 x Nichia NSCW100 WLEDs on D1 to D6 @ 100% PWM

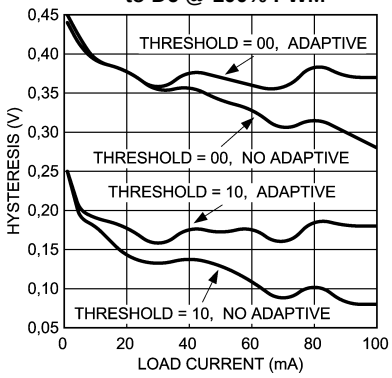

Figure 6.

LED Current Matching Distribution @ 17.5mA Current (2)

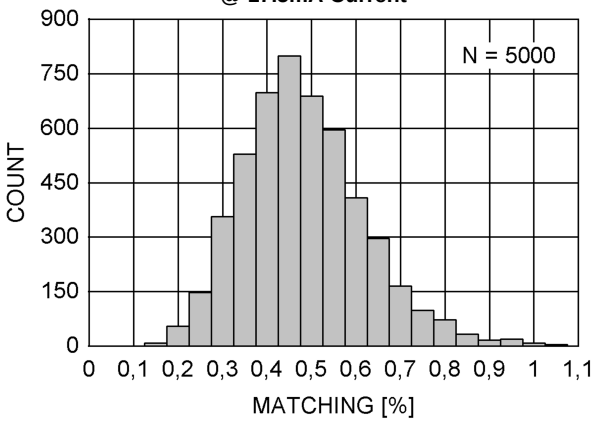

Figure 7.

LED Current Accuracy Distribution @ 17.5mA Current (2)

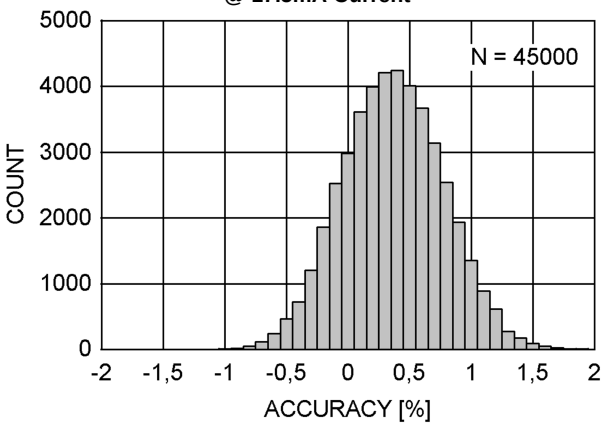

Figure 8.

(1) C_{IN}, C_{OUT}, C_1, C_2: Low-ESR Surface-Mount Ceramic Capacitors (MLCCs) used in setting electrical characteristics.
(2) Output Current Accuracy is the difference between the actual value of the output current and programmed value of this current. Matching is the maximum difference from the average. For the constant current outputs on the part (D1 to D9), the following are determined: the maximum output current (MAX), the minimum output current (MIN), and the average output current of all outputs (AVG). Two matching numbers are calculated: (MAX-AVG)/AVG and (AVG-MIN)/AVG. The largest number of the two (worst case) is considered the matching figure. Note that some manufacturers have different definitions in use.

Copyright © 2009–2013, Texas Instruments Incorporated

Typical Performance Characteristics (continued)

Unless otherwise specified: V_{DD} = 3.6V, C_{IN} = C_{OUT} = 1.0 µF, C_1 = C_2 = 0.47 µF, T_A = 25°C. (1)

Power Save Mode Supply Current vs V_{DD} . Charge pump in 1x mode. (3)

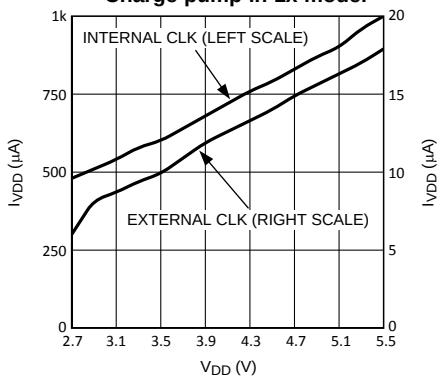

Figure 9.

Serial Bus Write (51h to Addr 36h) and Charge Pump startup Waveform. I_{LOAD}= 60mA; V_{DD}=3.6V

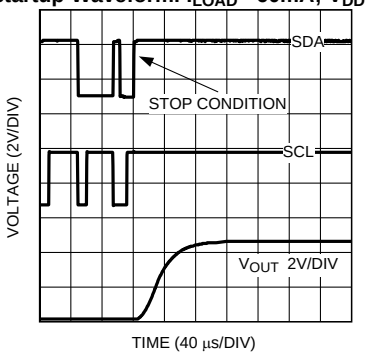

Figure 10.

Line Transient and Charge Pump Automatic Gain Change (1.5x to 1x) with 6 LEDs at 1mA / 100% PWM

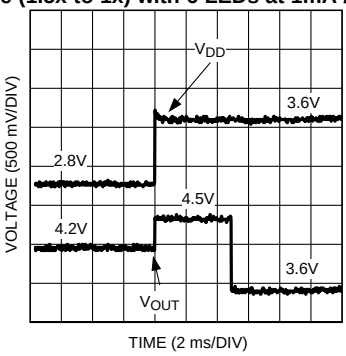

Figure 11.

Line Transient and Charge Pump Automatic Gain Change (1x to 1.5x) with 6 LEDs at 1mA / 100% PWM

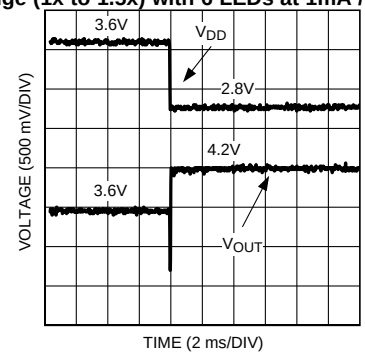

Figure 12.

100% PWM RGB LED Efficiency vs. V_{DD}

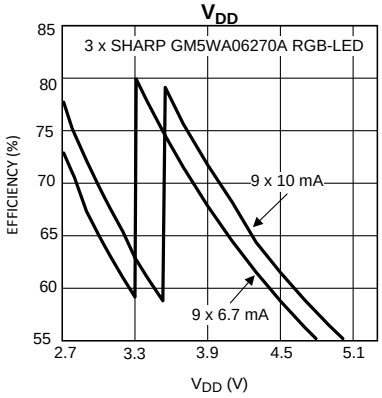

Figure 13.

100% PWM WLED Efficiency vs. V_{DD}

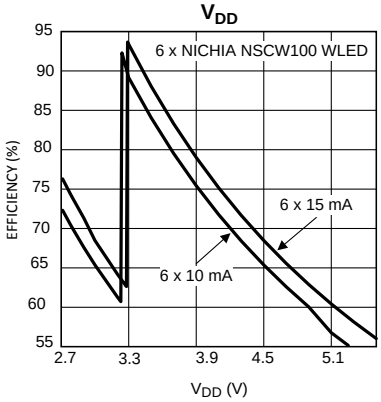

Figure 14.

(3) If the charge pump is OFF the supply current is even lower.

FUNCTIONAL OVERVIEW

The LP5523 is a fully integrated lighting management unit for producing lighting effects for mobile devices. The LP5523 includes all necessary power management, high-side current sources, temperature compensation, two-wire control interface and programmable pattern generators. The overall maximum current for each driver is set by an 8-bit register.

The LP5523 controls LED luminance with a pulse width modulation (PWM) scheme with a resolution of 12 bits. Also, the temperature compensation is done by PWM.

Programming

The LP5523 provides flexibility and programmability for dimming and sequencing control. Each LED can be controlled directly and independently through the serial bus, or LED drivers can be grouped together for pre-programmed flashing patterns.

The LP5523 has three independent program execution engines, so it is possible to form three independently programmable LED banks. LED drivers can be grouped based on their function so that, for example, the first bank of drivers can be assigned to the keypad illumination, the second bank to the “funlights”, and the third group to the indicator LED(s).

Each bank can contain 1 to 9 LED driver outputs. Instructions for program execution engines are stored in the program memory. The total amount of the program memory is 96 instructions, and the user can allocate the memory as required by the engines.

LED Error Detection

The LP5523 has built-in LED error detection. Error detection does not only detect open and short circuit, but provides an opportunity to measure the V_Fs of the LEDs. The test event is activated by a serial interface write, and the result can be read through the serial interface during the next cycle. This feature can also be addressed to measure the voltage on VDD, VOUT and INT pins. Typical example usage includes monitoring battery voltage or using INT pin as a light sensor interface.

Energy Efficiency

When charge-pump automatic mode selection is enabled, the LP5523 monitors the voltage over the drivers of D1 to D6 so that the device can select the best charge-pump gain and maintain good efficiency over the whole operating voltage range. The red LED element of an RGB LED typically has a forward voltage of about 2V. For that reason, the outputs D7, D8 and D9 are internally powered by VDD, since battery voltage is high enough to drive red LEDs over the whole operating voltage range. This allows the driving of three RGB LEDs with good efficiency because the red LEDs don't load the charge pump. LP5523 is able to automatically enter power-save mode when LED outputs are not active, thus lowering idle current consumption down to 10 µA (typ.). Also, during the "down time" of the PWM cycle (constant current output status is low), additional power savings can be achieved when the PWM Powersave feature is enabled.

Temperature Compensation

The luminance of an LED is typically a function of its temperature even though the current flowing through the LED remains constant. Since luminance is temperature dependent, many LED applications require some form of temperature compensation to decrease luminance and color purity variations due to temperature changes. The LP5523 has a built-in temperature-sensing element, and PWM duty cycle of the LED drivers changes linearly in relationship to changes in temperature. User can select the slope of the graph (31 slopes) based on the LED characteristics (see Figure 15). This compensation can be done either constantly, or only right after the device wakes up from powersave mode, to avoid error due to self-heating of the device. Linear compensation is considered to be practical and accurate enough for most LED applications.

Copyright © 2009–2013, Texas Instruments Incorporated

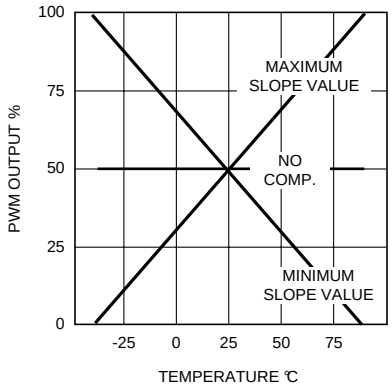

Figure 15. Temperature Compensation Principle

Compensation is effective over the temperature range −40°C to 90°C.

LP5523 Block Diagram

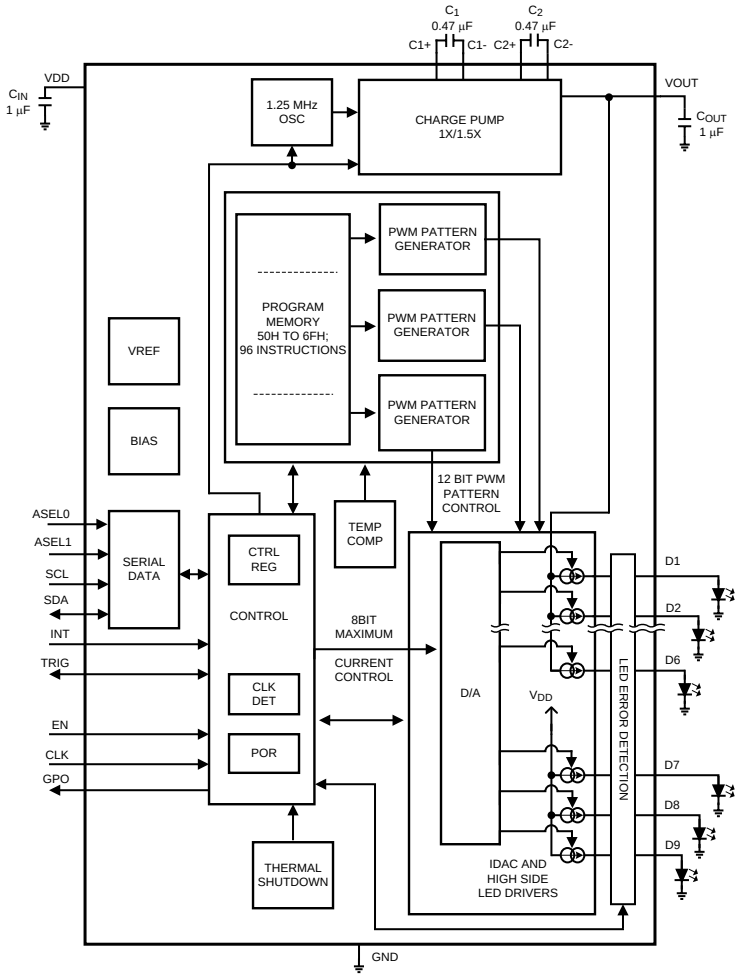

Modes of Operation

RESET In the RESET mode all the internal registers are reset to the default values. Reset is always entered if Reset Register (3DH) is written FFH or internal Power-On Reset is active. Power-On Reset (POR) will activate during the chip startup or when the supply voltage V_{DD} fall below 1.5V (typ.). Once V_{DD} rises above 1.5V (typ.), POR will deactivate, and the chip will continue to the STANDBY mode. CHIP_EN control bit is low after POR by default.

STANDBY: The STANDBY mode is entered if the register bit CHIP_EN or EN pin is LOW and Reset is not active. This is the low-power consumption mode, when all circuit functions are disabled. Most registers can be written in this mode if EN pin is risen to high so that control bits will be effective right after the startup (see Control Register Details).

STARTUP: When CHIP_EN bit is written high and EN pin is high, the INTERNAL STARTUP SEQUENCE powers up all the needed internal blocks (VREF, Bias, Oscillator etc.). Startup delay is 500 µs. If the chip temperature rises too high, the Thermal Shutdown (TSD) disables the chip operation, and the chip waits in STARTUP mode until no thermal shutdown event is present.

NORMAL: During NORMAL mode the user controls the chip using the Control Registers.

POWER SAVE: In POWER-SAVE mode analog blocks are disabled to minimize power consumption. See Automatic Power-Save Mode for further information.

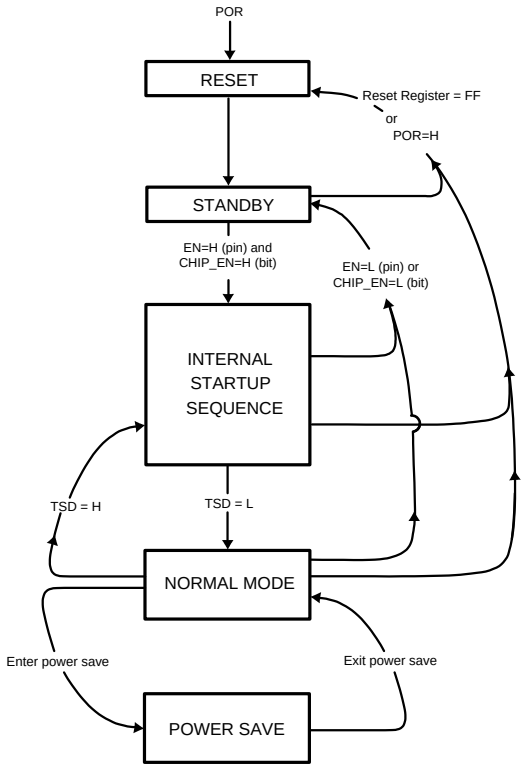

Copyright © 2009–2013, Texas Instruments Incorporated

Charge Pump Operational Description

Overview

The LP5523 includes a pre-regulated switched-capacitor charge pump with a programmable voltage multiplication of 1 and 1.5x. In 1.5x mode, by combining the principles of a switched-capacitor charge pump and a linear regulator, a regulated 4.5V output is generated from the Li-Ion input voltage range. A two-phase non-overlapping clock generated internally controls the operation of the charge pump. During the charge phase, both flying capacitors (C1 and C2) are charged from input voltage. In the pump phase that follows, the flying capacitors are discharged to output. A traditional switched-capacitor charge pump operating in this manner will use switches with very low on-resistance, ideally 0Ω, to generate an output voltage that is 1.5x the input voltage. The LP5523 regulates the output voltage by controlling the resistance of the input-connected pass-transistor switches in the charge pump.

Output Resistance

At lower input voltages, the charge pump output voltage may degrade due to effective output resistance (R_{OUT}) of the charge pump. The expected voltage drop can be calculated by using a simple model for the charge pump illustrated in Figure 16 below.

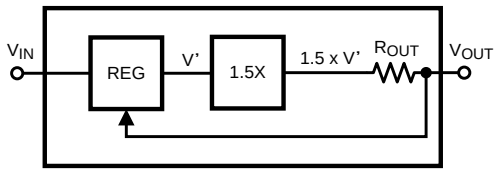

Figure 16. Charge Pump Output Resistance Model

The model shows a linear pre-regulation block (REG), a voltage multiplier (1.5x), and an output resistance (R_{OUT}). Output resistance models the output voltage drop that is inherent to switched capacitor converters. The output resistance is 3.5Ω (typ.), and it is a function of switching frequency, input voltage, flying capacitors' capacitance value, internal resistances of the switches and ESR of the flying capacitors. When the output voltage is in regulation, the regulator in the model controls the voltage V' to keep the output voltage equal to 4.5V (typ.).

With increased output current, the voltage drop across R_{OUT} increases. To prevent drop in output voltage, the voltage drop across the regulator is reduced, V' increases, and V_{OUT} remains at 4.5V. When the output current increases to the point that there is zero voltage drop across the regulator, V' equals the input voltage, and the output voltage is "on the edge" of regulation. Additional output current causes the output voltage to fall out of regulation, so that the operation is similar to a basic open-loop 1.5x charge pump. In this mode, output current results in output voltage drop proportional to the output resistance of the charge pump. The out-of-regulation output voltage can be approximated by: $V_{OUT} = 1.5 \times V_{IN} - I_{OUT} \times R_{OUT}$.

Controlling the Charge Pump

The charge pump is controlled with two CP_MODE bits in MISC register (address 36H). When both of the bits are low, the charge pump is disabled, and output voltage is pulled down with an internal 300 kΩ (typ.) resistor. The charge pump can be forced to bypass mode, so the battery voltage is connected directly to the current sources; in 1.5x mode output voltage is boosted to 4.5V. In automatic mode, charge-pump operation mode is determined by saturation of constant current drivers, as described in LED Forward Voltage Monitoring below.

LED Forward Voltage Monitoring

When the charge-pump automatic mode selection is enabled, voltages over LED drivers D1 to D6 are monitored. (Note: Power input for current source outputs D7, D8 and D9 are internally connected to the VDD pin.) If the D1 to D6 drivers do not have enough headroom, charge-pump gain is set to 1.5x. Driver saturation monitor does not have a fixed voltage limit, since saturation voltage is a function of temperature and current. Charge pump gain is set to 1x, when battery voltage is high enough to supply all LEDs.

In automatic gain change mode, the charge pump is switched to bypass mode (1x), when LEDs are inactive for over 50 ms.

Copyright © 2009–2013, Texas Instruments Incorporated

Gain Change Hysteresis

Charge pump gain control utilizes digital filtering to prevent supply voltage disturbances (for example, the transient voltage on the power supply during the GSM burst) from triggering unnecessary gain changes. Hysteresis is provided to prevent periodic gain changes (which could occur due to LED driver) and charge-pump voltage drop in 1x mode. The hysteresis of the gain change is user-configurable; default setting is factory-programmable. Flexible configuration ensures that hysteresis can be minimized or set to desired level in each application.

LED forward voltage monitoring and gain control block diagram is shown in Figure 17.

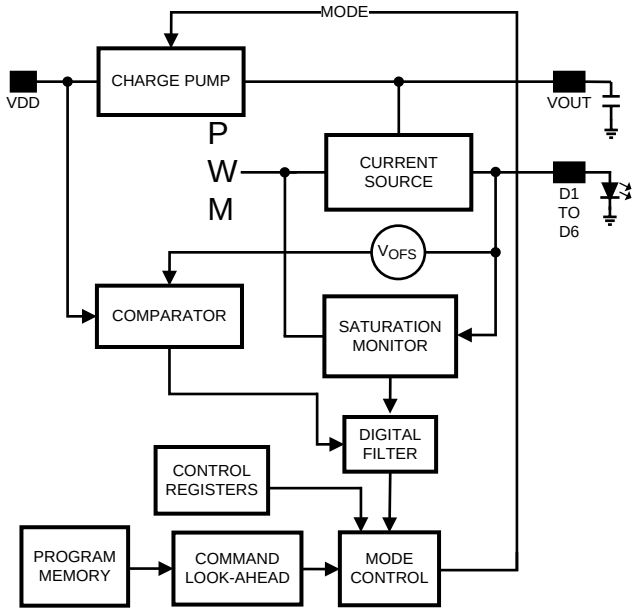

Figure 17. Forward Voltage Monitoring and Gain Control Block

LED Driver Operational Description

Overview

LP5523 LED drivers are constant current sources. Output current can be programmed by control registers up to 25.5 mA. The overall maximum current is set by 8-bit output current control registers with 100 µA step size. Each of the 9 LED drivers has a separate output current control register.

The LED luminance pattern (dimming) is controlled with PWM (pulse width modulation) technique, which has internal resolution of 12 bits (8-bit control can be seen by user). PWM frequency is 312 Hz. See Figure 18 below.

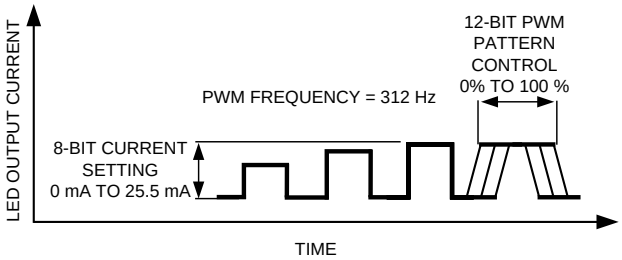

Figure 18. LED Pattern and Current Control Principle

LED dimming is controlled according to a logarithmic or linear scale, see Figure 19. A logarithmic or linear scheme can be set for both the program execution engine control and direct PWM control. Note: if the temperature compensation is active, the maximum PWM duty cycle is limited to 50% at +25°C. This is required to allow enough headroom for temperature compensation over the whole temperature range −40 °C to 90°C.

Copyright © 2009–2013, Texas Instruments Incorporated

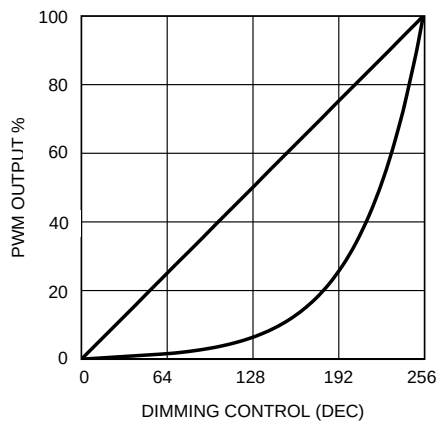

Figure 19. Logarithmic vs Linear Dimming

Powering LEDs

The LP5523 is very suitable for white LED and general purpose applications, and it is particularly well suited to use with RGB LEDs. The LP5523's architecture is optimized for use with three RGB LEDs. Typically, the red LEDs have forward voltages below 2 volts, thus red LEDs can be powered directly from VDD. In the LP5523 D7, D8 and D9 drivers are powered from the battery voltage (V_{DD}), not from the charge-pump output. D1 to D6 drivers are internally connected to the charge-pump output, and these outputs can be used for driving green and blue (V_F = 2.7V to 3.7V typ.) or white LEDs. Of course, D7, D8 and D9 outputs can be used for green, blue or white LEDs if the V_{DD} voltage is high enough.

An RGB LED configuration example is given in the Typical Applications section at the end of this document.

Controlling the High-Side LED Drivers

1. Direct PWM Control

All LP5523 LED drivers, D1 to D9, can be controlled independently through the two-wire serial I^2C-compatible interface. For each high-side driver there is a PWM control register. Direct PWM control is active by default.

2. Controlling by Program Execution Engines

Engine control is used when the user wants to create programmed sequences. The program execution engine has a higher priority than direct control registers. Therefore, if the user has set the PWM register to a certain value, it will be automatically overridden when the program execution engine controls the driver. LED control and program execution engine operation is described in the section Control Register Details.

3. Master Fader Control

In addition to LED-by-LED PWM register control, the LP5523 is equipped with so-called master fader control, which allows the user to fade in or fade out multiple LEDs by writing to only one register. This is a useful function to minimize serial bus traffic between the MCU and the LP5523. The LP5523 has three master fader registers, so it is possible to form three master fader groups.

I^2C-Compatible Control Interface

The I^2C-compatible synchronous serial interface provides access to the programmable functions and registers on the device. This protocol uses a two-wire interface for bidirectional communications between the IC's connected to the bus. The two interface lines are the Serial Data Line (SDA), and the Serial Clock Line (SCL). Every device on the bus is assigned a unique address and acts as either a Master or a Slave depending on whether it generates or receives the serial clock SCL. The SCL and SDA lines should each have a pullup resistor placed somewhere on the line and remain HIGH even when the bus is idle. Note: CLK pin is not used for serial bus data transfer.

Copyright © 2009–2013, Texas Instruments Incorporated

Data Validity

The data on SDA line must be stable during the HIGH period of the clock signal (SCL). In other words, state of the data line can only be changed when clock signal is LOW.

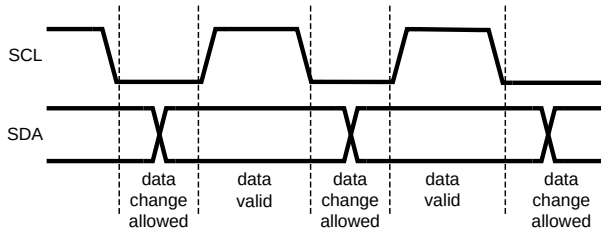

Figure 20. Data Validity Diagram

Start and Stop Conditions

START and STOP conditions classify the beginning and the end of the data transfer session. A START condition is defined as the SDA signal transitioning from HIGH to LOW while SCL line is HIGH. A STOP condition is defined as the SDA transitioning from LOW to HIGH while SCL is HIGH. The bus master always generates START and STOP conditions. The bus is considered to be busy after a START condition and free after a STOP condition. During data transmission, the bus master can generate repeated START conditions. First START and repeated START conditions are equivalent, function-wise.

Transferring Data

Every byte put on the SDA line must be eight bits long, with the most significant bit (MSB) being transferred first. Each byte of data has to be followed by an acknowledge bit. The acknowledge related clock pulse is generated by the master. The master releases the SDA line (HIGH) during the acknowledge clock pulse. The LP5523 pulls down the SDA line during the 9th clock pulse, signifying an acknowledge. The LP5523 generates an acknowledge after each byte has been received.

There is one exception to the “acknowledge after every byte” rule. When the master is the receiver, it must indicate to the transmitter an end of data by not acknowledging (“negative acknowledge”) the last byte clocked out of the slave. This “negative acknowledge” still includes the acknowledge clock pulse (generated by the master), but the SDA line is not pulled down.

After the START condition, the bus master sends a chip address. This address is seven bits long followed by an eighth bit which is a data direction bit (READ or WRITE). The LP5523 address is defined with ASEL0 and ASEL1 pins, and it is 32h when ASEL1 and ASEL0 are connected to GND. For the eighth bit, a “0” indicates a WRITE and a “1” indicates a READ. The second byte selects the register to which the data will be written. The third byte contains data to write to the selected register.

I²C-Compatible Chip Address

ASEL0 and ASEL1 pins configure the chip address for the LP5523 as shown in Table 1.

Table 1. LP5523 Chip Address Configuration

ASEL1	ASEL0	ADDRESS	8-BIT HEX ADDRESS
		(HEX)	WRITE/READ
GND	GND	32	64/65
GND	VEN	33	66/67
VEN	GND	34	68/69
VEN	VEN	35	6A/6B

Copyright © 2009–2013, Texas Instruments Incorporated

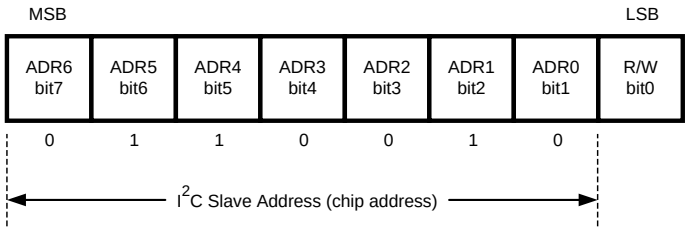

Figure 21. LP5523 Chip Address

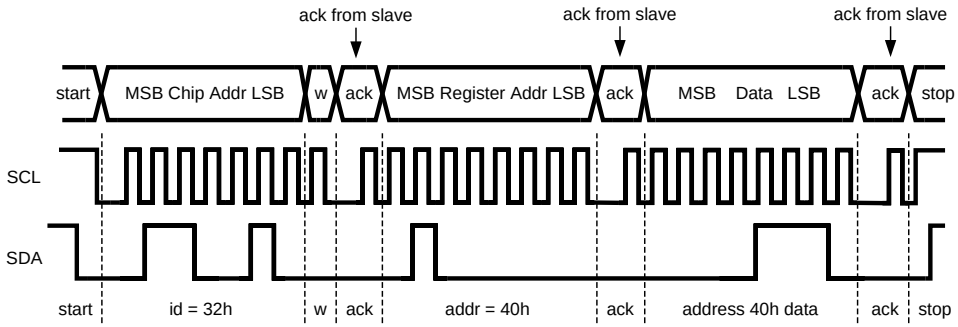

This data pattern writes temperature information to the TEMPERATURE WRITE register (40h).

Figure 22. Write cycle (w = write; SDA = "0"), id = chip address = 32h for LP5523

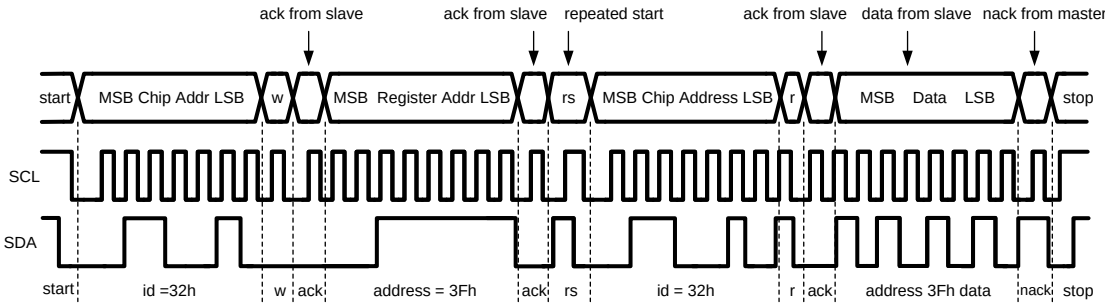

This data pattern reads temperature information from the TEMPERATURE READ register (3Fh). When a READ function is to be accomplished, a WRITE function must precede the READ function, as shown above.

Figure 23. Read cycle (r = read; SDA = "1"), id = chip address = 32h for LP5523

Control Register Write Cycle

- Master device generates start condition.
- Master device sends slave address (7 bits) and the data direction bit (r/w = 0).
- Slave device sends acknowledge signal if the slave address is correct
- Master sends control register address (8 bits).
- Slave sends acknowledge signal.
- Master sends data byte to be written to the addressed register.
- Slave sends acknowledge signal.
- If master sends further data bytes, the slave's control register address will be incremented by one after acknowledge signal. In order to reduce program load time, the LP5523 supports address auto incrementation. Register address is incremented after each 8 data bits. For example, the whole program memory page can be written in one serial bus write sequence. Note: serial bus address auto increment is not supported for register addresses from 16 to 1E.
- Write cycle ends when the master creates stop condition.

Copyright © 2009–2013, Texas Instruments Incorporated

Control Register Read Cycle

- Master device generates a start condition.
- Master device sends slave address (7 bits) and the data direction bit (r/w = 0).
- Slave device sends acknowledge signal if the slave address is correct
- Master sends control register address (8 bits).
- Slave sends acknowledge signal.
- Master device generates repeated start condition.
- Master sends the slave address (7 bits) and the data direction bit (r/w = 1).
- Slave sends acknowledge signal if the slave address is correct.
- Slave sends data byte from addressed register.
- If the master device sends an acknowledge signal, the control register address will be incremented by one. Slave device sends data byte from addressed register.
- Read cycle ends when the master does not generate acknowledge signal after data byte and generates stop condition

Auto-Increment Feature

The auto-increment feature allows writing several consecutive registers within one transmission. Every time an 8-bit word is sent to the LP5523, the internal address index counter will be incremented by one, and the next register will be written. Example below (Table 2) shows writing sequence to two consecutive registers. Auto-increment feature is enabled by writing EN_AUTO_INCR bit high in the MISC register (addr 36h). Note: serial bus address auto increment is not supported for register addresses from 16 to 1E.

Table 2. Auto Increment Example.

MASTER	START	CHIP ADDR =32H	WRITE		REG ADDR		DATA		DATA		STOP
LP5523				ACK		ACK		ACK		ACK	

Register Set

The LP5523 is controlled by a set of registers through the two-wire serial interface port. Some register bits are reserved for future use. Table 3 below lists device registers, their addresses and their abbreviations. A more detailed description is given in Control Register Details.

Table 3. Control Register Map

Hex Address	Register Name	Bit(s)	Read/ Write	Default Value After Reset	Bit Mnemonic and Description
00	ENABLE / ENGINE CNTRL1	[6]	R/W	x0xxxxxx	CHIP_EN 0 = LP5523 not enabled 1 = LP5523 enabled
		[5:4]	R/W	xx00xxxx	ENGINE1_EXEC Engine 1 program execution control
		[3:2]	R/W	xxxx00xx	ENGINE2_EXEC Engine 2 program execution control
		[1:0]	R/W	xxxxxx00	ENGINE3_EXEC Engine 3 program execution control
01	ENGINE CNTRL2	[5:4]	R/W	xx00xxxx	ENGINE1_MODE ENGINE 1 mode control
		[3:2]	R/W	xxxx00xx	ENGINE2_MODE ENGINE 2 mode control
		[1:0]	R/W	xxxxxx00	ENGINE3_MODE ENGINE 3 mode control
02	OUTPUT DIRECT/RATIOMETRIC MSB	[0]	R/W	xxxxxxx0	D9_RATIO_EN Enables ratiometric dimming for D9 output.

Copyright © 2009–2013, Texas Instruments Incorporated

Table 3. Control Register Map (continued)

Hex Address	Register Name	Bit(s)	Read/ Write	Default Value After Reset	Bit Mnemonic and Description
03	OUTPUT DIRECT/RATIOMETRIC LSB	[7]	R/W	0xxxxxxx	D8_RATIO_EN Enables ratiometric dimming for D8 output.
		[6]	R/W	x0xxxxxx	D7_RATIO_EN Enables ratiometric dimming for D7 output.
		[5]	R/W	xx0xxxxx	D6_RATIO_EN Enables ratiometric dimming for D6 output.
		[4]	R/W	xxx0xxxx	D5_RATIO_EN Enables ratiometric dimming for D5 output.
		[3]	R/W	xxxx0xxx	D4_RATIO_EN Enables ratiometric dimming for D4 output.
		[2]	R/W	xxxxx0xx	D3_RATIO_EN Enables ratiometric dimming for D3 output.
		[1]	R/W	xxxxxx0x	D2_RATIO_EN Enables ratiometric dimming for D2 output.
		[0]	R/W	xxxxxxx0	D1_RATIO_EN Enables ratiometric dimming for D1 output.
04	OUTPUT ON/OFF CONTROL MSB	[0]	R/W	xxxxxxx1	D9_ON ON/OFF Control for D9 output
05	OUTPUT ON/OFF CONTROL LSB	[7]	R/W	1xxxxxxx	D8_ON ON/OFF Control for D8 output
		[6]	R/W	x1xxxxxx	D7_ON ON/OFF Control for D7 output
		[5]	R/W	xx1xxxxx	D6_ON ON/OFF Control for D6 output
		[4]	R/W	xxx1xxxx	D5_ON ON/OFF Control for D5 output
		[3]	R/W	xxxx1xxx	D4_ON ON/OFF Control for D4 output
		[2]	R/W	xxxxx1xx	D3_ON ON/OFF Control for D3 output
		[1]	R/W	xxxxxx1x	D2_ON ON/OFF Control for D2 output
		[0]	R/W	xxxxxxx1	D1_ON ON/OFF Control for D1 output
06	D1 CONTROL	[7:6]	R/W	00xxxxxx	MAPPING Mapping for D1 output
		[5]	R/W	xx0xxxxx	LOG_EN Logarithmic dimming control for D1
		[4:0]	R/W	xxx00000	TEMP COMP Temperature compensation control for D1 output
07	D2 CONTROL	[7:6]	R/W	00xxxxxx	MAPPING Mapping for D2 output
		[5]	R/W	xx0xxxxx	LOG_EN Logarithmic dimming control for D2 output
		[4:0]	R/W	xxx00000	TEMP COMP Temperature compensation control for D2 output
08	D3 CONTROL	[7:6]	R/W	00xxxxxx	MAPPING Mapping for D3 output
		[5]	R/W	xx0xxxxx	LOG_EN Logarithmic dimming control for D3 output
		[4:0]	R/W	xxx00000	TEMP COMP Temperature compensation control for D3 output
09	D4 CONTROL	[7:6]	R/W	00xxxxxx	MAPPING Mapping for D4 output
		[5]	R/W	xx0xxxxx	LOG_EN Logarithmic dimming control for D4 output
		[4:0]	R/W	xxx00000	TEMP COMP Temperature compensation control for D4 output

Copyright © 2009–2013, Texas Instruments Incorporated

Table 3. Control Register Map (continued)

Hex Address	Register Name	Bit(s)	Read/ Write	Default Value After Reset	Bit Mnemonic and Description
0A	D5 CONTROL	[7:6]	R/W	00xxxxxx	MAPPING Mapping for D5 ouput
		[5]	R/W	xx0xxxxx	LOG_EN Logarithmic dimming control for D5 output
		[4:0]	R/W	xxx00000	TEMP COMP Temperature compensation control for D5
0B	D6 CONTROL	[7:6]	R/W	00xxxxxx	MAPPING Mapping for D6 output
		[5]	R/W	xx0xxxxx	LOG_EN Logarithmic dimming control for D6 output
		[4:0]	R/W	xxx00000	TEMP COMP Temperature compensation control for D6 output
0C	D7 CONTROL	[7:6]	R/W	00xxxxxx	MAPPING Mapping for D7 output
		[5]	R/W	xx0xxxxx	LOG_EN Logarithmic dimming control for D7 output
		[4:0]	R/W	xxx00000	TEMP COMP Temperature compensation control for D7 output
0D	D8 CONTROL	[7:6]	R/W	00xxxxxx	MAPPING Mapping for D8 output
		[5]	R/W	xx0xxxxx	LOG_EN Logarithmic dimming control for D8 output
		[4:0]	R/W	xxx00000	TEMP COMP Temperature compensation control for D8 output
0E	D9 CONTROL	[7:6]	R/W	00xxxxxx	MAPPING Mapping for D9 output
		[5]	R/W	xx0xxxxx	LOG_EN Logarithmic dimming control for D9 output
		[4:0]	R/W	xxx00000	TEMP COMP Temperature compensation control for D9 output
0F TO 15	RESERVED	[7:0]			RESERVED FOR FUTURE USE
16	D1 PWM	[7:0]	R/W	00000000	PWM PWM duty cycle control for D1
17	D2 PWM	[7:0]	R/W	00000000	PWM PWM duty cycle control for D2
18	D3 PWM	[7:0]	R/W	00000000	PWM PWM duty cycle control for D3
19	D4 PWM	[7:0]	R/W	00000000	PWM PWM duty cycle control for D4
1A	D5 PWM	[7:0]	R/W	00000000	PWM PWM duty cycle control for D5
1B	D6 PWM	[7:0]	R/W	00000000	PWM PWM duty cycle control for D6
1C	D7 PWM	[7:0]	R/W	00000000	PWM PWM duty cycle control for D7
1D	D8 PWM	[7:0]	R/W	00000000	PWM PWM duty cycle control for D8
1E	D9 PWM	[7:0]	R/W	00000000	PWM PWM duty cycle control for D9
1F TO 25	RESERVED	[7:0]			RESERVED FOR FUTURE USE
26	D1 CURRENT CONTROL	[7:0]	R/W	10101111	CURRENT D1 output current control register. Default 17.5 mA (typ.)
27	D2 CURRENT CONTROL	[7:0]	R/W	10101111	CURRENT D2 output current control register. Default 17.5 mA (typ.)
28	D3 CURRENT CONTROL	[7:0]	R/W	10101111	CURRENT D3 output current control register. Default 17.5 mA (typ.)

Copyright © 2009–2013, Texas Instruments Incorporated

Table 3. Control Register Map (continued)

Hex Address	Register Name	Bit(s)	Read/ Write	Default Value After Reset	Bit Mnemonic and Description
29	D4 CURRENT CONTROL	[7:0]	R/W	10101111	CURRENT D4 output current control register. Default current is 17.5 mA (typ.)
2A	D5 CURRENT CONTROL	[7:0]	R/W	10101111	CURRENT D5 output current control register. Default current is 17.5 mA (typ.)
2B	D6 CURRENT CONTROL	[7:0]	R/W	10101111	CURRENT D6 output current control register. Default current is 17.5 mA (typ.)
2C	D7 CURRENT CONTROL	[7:0]	R/W	10101111	CURRENT D7 output current control register. Default current is 17.5 mA (typ.)
2D	D8 CURRENT CONTROL	[7:0]	R/W	10101111	CURRENT D8 output current control register. Default current is 17.5 mA (typ.)
2E	D9 CURRENT CONTROL	[7:0]	R/W	10101111	CURRENT D9 output current control register. Default current is 17.5 mA (typ.)
2F TO 35	RESERVED FOR FUTURE USE	[7:0]			RESERVED FOR FUTURE USE
36	MISC	[7]	R/W	0xxxxxxx	VARIABLE_D_SEL Variable D source selection
		[6]	R/W	x1xxxxxx	EN_AUTO_INCR Serial bus address auto increment enable
		[5]	R/W	xx0xxxxx	POWERSAVE_EN Powersave mode enable
		[4:3]	R/W	xxx00xxx	CP_MODE Charge pump gain selection
		[2]	R/W	xxxxx0xx	PWM_PS_EN PWM cycle powersave enable
		[1]	R/W	xxxxxx0x	CLK_DET_EN External clock detection
		[0]	R/W	xxxxxxx0	INT_CLK_EN Clock source selection
37	ENGINE1 PC	[6:0]	R/W	x0000000	PC Program counter for engine 1
38	ENGINE2 PC	[6:0]	R/W	x0000000	PC Program counter for engine 2
39	ENGINE3 PC	[6:0]	R/W	x0000000	PC Program counter for engine 3

Copyright © 2009–2013, Texas Instruments Incorporated

Table 3. Control Register Map (continued)

Hex Address	Register Name	Bit(s)	Read/ Write	Default Value After Reset	Bit Mnemonic and Description
3A	STATUS/INTERRUPT	[7]	R	0xxxxxxx	LEDTEST_MEAS_DONE Indicates when the LED test measurement is done.
		[6]	R	x1xxxxxx	MASK_BUSY Mask bit for interrupts generated by STARTUP_BUSY or ENGINE_BUSY.
		[5]	R	xx0xxxxx	STARTUP_BUSY This bit indicates that the startup sequence is running.
		[4]	R	xxx0xxxx	ENGINE_BUSY This bit indicates that a program execution engine is clearing internal registers.
		[3]	R	xxxx0xxx	EXT_CLK_USED Indicates when external clock signal is in use.
		[2]	R	xxxxx0xx	ENG1_INT Interrupt bit for program execution engine 1
		[1]	R	xxxxxx0x	ENG2_INT Interrupt bit for program execution engine 2
		[0]	R	xxxxxxx0	ENG3_INT Interrupt bit for program execution engine 3
3B	GPO	[2]	R/W	xxxxx0xx	INT_CONF INT pin can be configured to function as a GPO with this bit
		[1]	R/W	xxxxxx0x	GPO GPO pin control
		[0]	R/W	xxxxxxx0	INT_GPO GPO pin control for INT pin (when INT_CONF is set "1")
3C	VARIABLE	[7:0]	R/W	00000000	VARIABLE Global 8-bit variable
3D	RESET	[7:0]	R/W	00000000	RESET Writing 11111111 into this register resets the LP5523
3E	TEMP ADC CONTROL	[7]	R	0xxxxxxx	TEMP_MEAS_BUSY Indicates when temperature measurement is active
		[2]	R/W	xxxxx0xx	EN_TEMP_SENSOR Reads the internal temperature sensor once
		[1]	R/W	xxxxxx0x	CONTINUOUS_CONV Continuous temperature measurement selection
		[0]	R/W	xxxxxxx0	SEL_EXT_TEMP Internal/external temperature sensor selection
3F	TEMPERATURE READ	[7:0]	R	00011001	TEMPERATURE Bits for temperature information
40	TEMPERATURE WRITE	[7:0]	R/W	00000000	TEMPERATURE Bits for temperature information
41	LED TEST CONTROL	[7]	R/W	0xxxxxxx	EN_LED_TEST_ADC
		[6]	R/W	x0xxxxxx	EN_LED_TEST_INT
		[5]	R/W	xx0xxxxx	CONTINUOUS_CONV Continuous LED test measurement selection
		[4:0]	R/W	xxx00000	LED_TEST_CTRL Control bits for LED test
42	LED TEST ADC	[7:0]	R	N/A	LED_TEST_ADC LED test result
43	RESERVED	[7:0]			RESERVED FOR FUTURE USE
44	RESERVED	[7:0]			RESERVED FOR FUTURE USE
45	ENGINE1 VARIABLE A	[7:0]	R	00000000	VARIABLE FOR ENGINE1

Copyright © 2009–2013, Texas Instruments Incorporated

Table 3. Control Register Map (continued)

Hex Address	Register Name	Bit(s)	Read/ Write	Default Value After Reset	Bit Mnemonic and Description
46	ENGINE2 VARIABLE A	[7:0]	R	00000000	VARIABLE FOR ENGINE2
47	ENGINE3 VARIABLE A	[7:0]	R	00000000	VARIABLE FOR ENGINE3
48	MASTER FADER1	[7:0]	R/W	00000000	MASTER FADER
49	MASTER FADER2	[7:0]	R/W	00000000	MASTER FADER
4A	MASTER FADER3	[7:0]	R/W	00000000	MASTER FADER
4B	RESERVED FOR FUTURE USE				RESERVED FOR FUTURE USE
4C	ENG1 PROG START ADDR	[6:0]	R/W	x0000000	ADDR
4D	ENG2 PROG START ADDR	[6:0]	R/W	x0001000	ADDR
4E	ENG3 PROG START ADDR	[6:0]	R/W	x0010000	ADDR
4F	PROG MEM PAGE SEL	[2:0]	R/W	xxxxx000	PAGE_SEL

Copyright © 2009–2013, Texas Instruments Incorporated

Table 3. Control Register Map (continued)

Hex Address	Register Name	Bit(s)	Read/ Write	Default Value After Reset	Bit Mnemonic and Description
50	PROGRAM MEMORY 00H/10H/20H/30H/40H/50H	[15:8]	R/W	00000000	CMD Every Instruction is 16-bit width. The LP5523 can store 96 instructions. Each instruction consists of 16 bits. Because one register has only 8 bits, one instruction requires two register addresses. In order to reduce program load time the LP5523 supports address auto-incrementation. Register address is incremented after each 8 data bits. Thus the whole program memory page can be written in one serial bus write sequence.
51		[7:0]	R/W	00000000	
52	PROGRAM MEMORY 01H/11H/21H/31H/41H/51H	[15:8]	R/W	00000000	
53		[7:0]	R/W	00000000	
54	PROGRAM MEMORY 02H/12H/22H/32H/42H/52H	[15:8]	R/W	00000000	
55		[7:0]	R/W	00000000	
56	PROGRAM MEMORY 03H/13H/23H/33H/43H/53H	[15:8]	R/W	00000000	
57		[7:0]	R/W	00000000	
58	PROGRAM MEMORY 04H/14H/24H/34H/44H/54H	[15:8]	R/W	00000000	
59		[7:0]	R/W	00000000	
5A	PROGRAM MEMORY 05H/15H/25H/35H/45H/55H	[15:8]	R/W	00000000	
5B		[7:0]	R/W	00000000	
5C	PROGRAM MEMORY 06H/16H/26H/36H/46H/56H	[15:8]	R/W	00000000	
5D		[7:0]	R/W	00000000	
5E	PROGRAM MEMORY 07H/17H/27H/37H/47H/57H	[15:8]	R/W	00000000	
5F		[7:0]	R/W	00000000	
60	PROGRAM MEMORY 08H/18H/28H/38H/48H/58H	[15:8]	R/W	00000000	
61		[7:0]	R/W	00000000	
62	PROGRAM MEMORY 09H/19H/29H/39H/49H/59H	[15:8]	R/W	00000000	
63		[7:0]	R/W	00000000	
64	PROGRAM MEMORY 0AH/1AH/2AH/3AH/4AH/5AH	[15:8]	R/W	00000000	
65		[7:0]	R/W	00000000	
66	PROGRAM MEMORY 0BH/1BH/2BH/3BH/4BH/5BH	[15:8]	R/W	00000000	
67		[7:0]	R/W	00000000	
68	PROGRAM MEMORY 0CH/1CH/2CH/3CH/4CH/5CH	[15:8]	R/W	00000000	
69		[7:0]	R/W	00000000	
6A	PROGRAM MEMORY 0DH/1DH/2DH/36D/46D/5DH	[15:8]	R/W	00000000	
6B		[7:0]	R/W	00000000	
6C	PROGRAM MEMORY 0EH/1EH/2EH/3EH/4EH/5EH	[15:8]	R/W	00000000	
6D		[7:0]	R/W	00000000	
6E	PROGRAM MEMORY 0FH/1FH/2FH/3FH/4FH/5FH	[15:8]	R/W	00000000	
6F		[7:0]	R/W	00000000	
70	ENG1 MAPPING MSB	[7]	R	0xxxxxxx	GPO Engine 1 mapping information, GPO pin
		[0]	R	xxxxxxx0	D9 Engine 1 mapping information, D9 output

Copyright © 2009–2013, Texas Instruments Incorporated

Table 3. Control Register Map (continued)

Hex Address	Register Name	Bit(s)	Read/ Write	Default Value After Reset	Bit Mnemonic and Description
71	ENG1 MAPPING LSB	[7]	R	0xxxxxxx	D8 Engine 1 mapping information, D8 output
		[6]	R	x0xxxxxx	D7 Engine 1 mapping information, D7 output
		[5]	R	xx0xxxxx	D6 Engine 1 mapping information, D6 output
		[4]	R	xxx0xxxx	D5 Engine 1 mapping information, D5 output
		[3]	R	xxxx0xxx	D4 Engine 1 mapping information, D4 output
		[2]	R	xxxxx0xx	D3 Engine 1 mapping information, D3 output
		[1]	R	xxxxxx0x	D2 Engine 1 mapping information, D2 output
		[0]	R	xxxxxxx0	D1 Engine 1 mapping information, D1 output
72	ENG2 MAPPING MSB	[7]	R	0xxxxxxx	GPO Engine 2 mapping information, GPO pin
		[0]	R	xxxxxxx0	D9 Engine 2 mapping information, D9 output
73	ENG2 MAPPING LSB	[7]	R	0xxxxxxx	D8 Engine 2 mapping information, D8 output
		[6]	R	x0xxxxxx	D7 Engine 2 mapping information, D7 output
		[5]	R	xx0xxxxx	D6 Engine 2 mapping information, D6 output
		[4]	R	xxx0xxxx	D5 Engine 2 mapping information, D5 output
		[3]	R	xxxx0xxx	D4 Engine 2 mapping information, D4 output
		[2]	R	xxxxx0xx	D3 Engine 2 mapping information, D3 output
		[1]	R	xxxxxx0x	D2 Engine 2 mapping information, D2 output
		[0]	R	xxxxxxx0	D1 Engine 2 mapping information, D1 output
74	ENG3 MAPPING MSB	[7]	R	0xxxxxxx	GPO Engine 3 mapping information, GPO pin
		[0]	R	xxxxxxx0	D9 Engine 3 mapping information, D9 output

Copyright © 2009–2013, Texas Instruments Incorporated

Table 3. Control Register Map (continued)

Hex Address	Register Name	Bit(s)	Read/ Write	Default Value After Reset	Bit Mnemonic and Description
75	ENG3 MAPPING LSB	[7]	R	0xxxxxxx	D8 Engine 3 mapping information, D8 output
		[6]	R	x0xxxxxx	D7 Engine 3 mapping information, D7 output
		[5]	R	xx0xxxxx	D6 Engine 3 mapping information, D6 output
		[4]	R	xxx0xxxx	D5 Engine 3 mapping information, D5 output
		[3]	R	xxxx0xxx	D4 Engine 3 mapping information, D4 output
		[2]	R	xxxxx0xx	D3 Engine 3 mapping information, D3 output
		[1]	R	xxxxxx0x	D2 Engine 3 mapping information, D2 output
		[0]	R	xxxxxxx0	D1 Engine 3 mapping information, D1 output
76	GAIN CHANGE CTRL	[7:6]	R/W	00xxxxxx	THRESHOLD Threshold voltage (typ.). 00 – 400mV 01 – 300mV 10 – 200mV 11 – 100mV
		[5]	R/W	xx0xxxxx	ADAPTIVE_THRESH_EN Activates adaptive threshold.
		[4:3]	R/W	xxx00xxx	TIMER 00 – 5ms 01 – 10 ms 10 – 50 ms 11 – Infinite
		[2]	R/W	xxxxx0xx	FORCE_1x Activates 1.5x to 1x timer.

Control Register Details

00 ENABLE/ ENGINE CONTROL1

- **00 - Bit [6] CHIP_EN**
  - 1 = internal startup sequence powers up all the needed internal blocks and the device enters normal mode.
  - 0 = standby mode is entered. Control registers can still be written or read, excluding bits[5:0] in reg 00 (this register), registers 16h to 1E (LED PWM registers) and 37h to 39h (program counters).
- **00 — Bits [5:4] ENGINE1_EXEC**
  - Engine 1 program execution control. Execution register bits define how the program is executed. Program start address can be programmed to Program Counter (PC) register 37H.
  - 00 = hold: Hold causes the execution engine to finish the current instruction and then stop. Program counter (PC) can be read or written only in this mode.
  - 01 = step: Execute the instruction at the location pointed by the PC, increment the PC by one and then reset ENG1_EXEC bits to 00 (i.e. enter *hold*).
  - 10 = free run: Start program execution from the location pointed by the PC.
  - 11 = execute once: Execute the instruction pointed by the current PC value and reset ENG1_EXEC to 00 (i.e. enter *hold*). The difference between *step* and *execute once* is that *execute once* does not increment the PC.
- **00 — Bits [3:2] ENGINE2_EXEC**
  - Engine 2 program execution control. Equivalent to above definition of control bits. Program start address can be programmed to Program Counter (PC) register 38H.
- **00 — Bits [1:0] ENGINE3_EXEC**

Copyright © 2009–2013, Texas Instruments Incorporated

- Engine 3 program execution control. Equivalent to engine 1 control bits. Program start address can be programmed to Program Counter (PC) register 39H.

01 ENGINE CONTROL2

- Operation modes are defined in this register.
  - **Disabled**: Engines can be configured to *disabled mode* each one separately.
  - **Load program:** Writing to program memory is allowed only when the engine is in *load program* operation mode and engine busy bit (reg 3A) is not set. Serial bus master should check the busy bit before writing to program memory or allow at least 1ms delay after entering to *load mode* before memory write, to ensure initalization. All the three engines are in hold while one or more engines are in *load program* mode. PWM values are frozen, also. Program execution continues when all the engines are out of *load program* mode. *Load program* mode resets the program counter of the respective engine. *Load program* mode can be entered from the *disabled mode* only. Entering *load program* mode from the *run program* mode is not allowed.
  - **Run Program:***Run program* mode executes the instructions stored in the program memory. Execution register (ENG1_EXEC etc.) bits define how the program is executed (*hold, step, free run or execute once*). Program start address can be programmed to the Program Counter (PC) register. The Program Counter is reset to zero when the PC's upper limit value is reached.
  - **Halt**: Instruction execution aborts immediately and engine operation halts.
  - **01 — Bit [5:4] ENGINE1_MODE**
  - 00 = disabled.
  - 01 = load program to SRAM, reset engine 1 PC.
  - 10 = run program as defined by ENGINE1_EXEC bits.
  - 11 = halts the engine.
  - **01 — Bits [3:2] ENGINE2_MODE**
  - 00 = disabled.
  - 01 = load program to SRAM, reset engine 2 PC.
  - 10 = run program as defined by ENGINE2_EXEC bits.
  - 11 = halts the engine.
  - **01 — Bits [3:2] ENGINE3_MODE**
  - 00 = disabled.
  - 01 = load program to SRAM, reset engine 3 PC.
  - 10 = run program as defined by ENGINE3_EXEC bits.
  - 11 = halts the engine.

02 OUTPUT DIRECT/RATIOMETRIC MSB

- A particular feature of the LP5523 is the ratiometric up/down dimming of the RGB-LEDs. In other words, the LED driver PWM output will vary in a ratiometric manner. By a ratiometric approach the emitted color of an RGB–LED remains the same regardless of the initial magnitudes of the R/G/B PWM outputs. For example, if the PWM output of the red LED output is doubled, the output of green LED is doubled also.
  - **02 — Bit [0] D9_RATIO_EN**
  - 1 = enables ratiometric diming for D9 output.
  - 0 = disables ratiometric dimming for D9 output.

03 OUTPUT DIRECT/RATIOMETRIC LSB

- **03 — Bit [7] D8_RATIO_EN**
  - 1 = enables ratiometric diming for D8 output.
  - 0 = disables ratiometric dimming for D8 output.
  - **03 — Bit [0] D1_RATIO_EN to Bit [6] D7_RATIO_EN**
  - The options for D1 output to D7 output are the same as above — see the "03 — Bit [7]" section.

04 OUTPUT ON/OFF CONTROL MSB

- **04 — Bit [0] D9_ON**
  - 1 = D9 output ON.
  - 0 = D9 output OFF.
  - Note: Engine mapping overrides this control.

05 OUTPUT ON/OFF CONTROL MSB

- **05 — Bit [7] D8_ON**
  - 1 = D8 output ON.
  - 0 = D8 output OFF.
  - Note: Engine mapping over rides this control.
- **05 — Bit [0] D1_ON to Bit [6] D7_ON**
  - The options for D1 output to D7 output are the same as above — see the “05 — Bit [7]” section.

06 D1 CONTROL

- This is the register used to assign the D1 output to the MASTER FADER group 1, 2, or 3, or none of them. Also, this register sets the correction factor for the D1 output temperature compensation and selects between linear and logarithmic PWM brightness adjustment. By using logarithmic PWM-scale the visual effect looks like linear. When the logarithmic adjustment is enabled, the chip handles internal PWM values with 12-bit resolution. This allows very fine-grained PWM control at low PWM duty cycles.
  - **06 — Bit [7:6] MAPPING**
  - 00 = no master fader set, clears master fader set for D1. Default setting.
  - 01 = MASTER FADER1 controls the D1 output.
  - 10 = MASTER FADER2 controls the D1 output.
  - 11 = MASTER FADER3 controls the D1 output.
  - The duty cycle on D1 output will be D1 PWM register value (address 16H) multiplied with the value in the MASTER FADER register.
  - **06 — Bit [5] LOG_EN**
  - 0 = linear adjustment.
  - 1 = logarithmic adjustment.
  - This bit is effective for both the program execution engine control and direct PWM control.
  - **06 — Bit [4:0] TEMP_COMP**
  - The reference temperature is +25°C (i.e. the temperature at which the compensation has no effect) and the correction factor (slope) can be set in 0.1% 1/°C steps to any value between −1.5% 1/°C and +1.5% 1/°C, with a default to 0.0% 1/°C.

TEMP_COMP bits	Correction factor [%]
00000	Not activated - default setting after reset.
11111	−1.5 1/°C
11110	−1.4 1/°C
...	...
10001	−0.1 1/°C
10000	0 1/°C
00001	+0.1 1/°C
...	...
01110	+1.4 1/°C
01111	+1.5 1/°C

Copyright © 2009–2013, Texas Instruments Incorporated

The PWM duty cycle at temperature T (in centigrade) can be obtained as follows: PWM_F = [PWM_S - (25 - T) * correction factor * PWM_S] / 2, where PWM_F is the final duty cycle at temperature *T*, PWM_S is the set PWM duty cycle (PWM duty cycle is set in registers 16H to 1EH) and the value of the correction factor is obtained from the table above.

For example, if the set PWM duty cycle in register 16H is 90%, temperature T is −10°C and the chosen correction factor is +1.5% 1/°C, the final duty-cycle PWM_F for D1 output will be [90% - (25°C − (−10°C)) * 1.5% 1/°C * 90%]/2 = [90% - 35 * 0.015 * 90%]/2 = 21.4%. Default setting 00000 means that the temperature compensation is non-active and the PWM output (0 to 100%) is set solely by PWM registers D1 PWM to D9 PWM.

07 D2 CONTROL to 0E D9 CONTROL

- The control registers and control bits for D2 output to D9 output are similar to that given to D1, see the 06 – Bit [5] and 06 – Bits [4:0] sections.

16 D1 PWM

- This is the PWM duty cycle control for D1 output. D1 PWM register is effective during direct control operation - direct PWM control is active after power up by default. Note: serial bus address auto increment is not supported for register addresses from 16 to 1E.
  - **16 — Bits [7:0] PWM**
  - These bits set the D1 output PWM as shown in the figure below. Note: if the temperature compensation is active, the maximum PWM duty cycle is 50% at +25°C. This is required to allow enough headroom for temperature compensation over the temperature range −40 °C to 90°C.

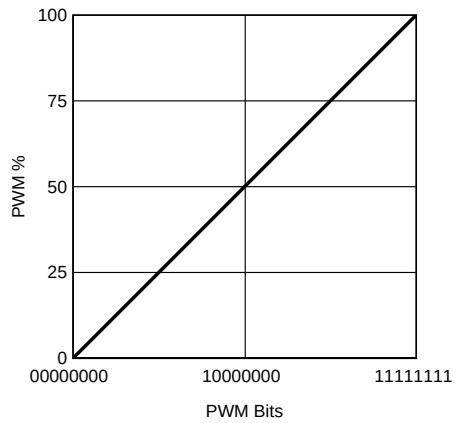

Figure 24. Direct PWM Control Bits vs. PWM Duty Cycle

17 D2 PWM to 1E D9 PWM

- PWM duty cycle control for outputs D2 to D9. The control registers and control bits for D2 output to D9 output are similar to that given to D1.

26 D1 CURRENT CONTROL

- D1 LED driver output current control register. The resolution is 8-bits and step size is 100 µA. .

CURRENT bits	Output Current (typ.)
00000000	0.0 mA
00000001	0.1 mA
00000010	0.2 mA
...	...
10101111	17.5 mA default setting
....	....
11111110	25.4 mA
11111111	25.5 mA

27 D2 CURRENT CONTROL to 2E D9 CURRENT CONTROL

- The control registers and control bits for D2 output up to D9 output are similar to that given to D1 output.

36 MISC

- This register contains miscellaneous control bits.
  - **36 — Bit [7] VARIABLE_D_SEL**
  - Variable D source selection.
  - 1 = variable D source is the LED test ADC output (LED TEST ADC). This allows, for example, program execution control with analog signal.
  - 0 = variable D source is the register 3C (VARIABLE).
  - **36 — Bit [6] EN_AUTO_INCR**
  - The automatic increment feature of the serial bus address enables a quick memory write of successive registers within one transmission.
  - 1 = serial bus address automatic increment is enabled.
  - 0 = serial bus address automatic increment is disabled.
  - **36 — Bit [5] POWERSAVE_EN**
  - 1 = power save mode is enabled.
  - 0 = power save mode is disabled. See section "Automatic Power-Save Mode" for further details.
  - **36 — Bits [4:3] CP_MODE**
  - Charge pump operation mode.
  - 00 = OFF.
  - 01 = forced to bypass mode (1x).
  - 10 = forced to 1.5x mode; output voltage is boosted to 4.5V.
  - 11 = automatic mode selection.
  - **36 — Bit [2] PWM_PS_EN**
  - Enables PWM powersave operation. Significant power savings can be achieved, for example, during ramp instruction.
  - **36 — Bits [1:0] CLK_DET_EN and INT_CLK_EN**
  - Program execution is clocked with internal 32.7 kHz clock or with external clock. Clocking is controlled with bits INT_CLK_EN and CLK_DET_EN in the following way:
  - 00 = forced external clock (CLK pin).
  - 01 = forced internal clock.
  - 10 = automatic selection.
  - 11 = internal clock.
  - External clock can be used if a clock signal is present on CLK-pin. External clock frequency must be 32.7 kHz for correct operation. If a higher or a lower frequency is used, it will affect on the program execution engine operation speed. The detector block does not limit the maximum frequency. External clock status can be checked with read only bit EXT_CLK_USED in register address 3A, when the external clock detection is enabled (Bit [1] CLK_DET_EN = high).
  - If external clock is not used in the application, CLK pin should be connected to GND to avoid oscillation on this pin and extra current consumption.

37 ENGINE1 PC

- Program counter starting value for program execution engine 1; A value from 0000000 to 1011111. The maximum value depends on program memory allocation between the three program execution engines.

38 ENGINE2 PC

- **38 — Bits [6:0] PC**
  - Program counter starting value for program execution engine 2; A value from 0000000 to 1011111.

39 ENGINE3 PC

- **39 — Bits [6:0] PC**
  - Program counter starting value for program execution engine 3; A value from 0000000 to 1011111.

Copyright © 2009–2013, Texas Instruments Incorporated

3A STATUS/INTERRUPT

- **3A — Bit [7] LEDTEST_MEAS_DONE**
  - This bit indicates when the LED test is done, and the result is written to the LED TEST ADC register. Typically the conversion takes 2.7 milliseconds to complete.
  - 1 = LED test done.
  - 0 = LED test not done.
  - This bit is a read-only bit, and it is cleared (to “0”) automatically after a read operation.
- **3A — Bit [6] MASK_BUSY**
  - Mask bit for interrupts generated by STARTUP_BUSY or ENGINE_BUSY.
  - 1 = Interrupt events will be masked i.e. no external interrupt will be generated from STARTUP_BUSY or ENGINE_BUSY event (default).
  - 0 = External interrupt will be generated when STARTUP_BUSY or ENGINE_BUSY condition is no longer true. Reading the register 3A clears the status bits [5:4] and releases INT pin to high state.
- **3A — Bit [5] STARTUP_BUSY**
  - A status bit which indicates that the device is running the internal startup sequence. See Modes of Operation for details.
  - 1 = internal startup sequence running. **Note: STARTUP_BUSY = 1 always when CHIP_EN bit is "0".**
  - 0 = internal startup sequence completed.
- **3A — Bit [4] ENGINE_BUSY**
  - A status bit which indicates that a program execution engine is clearing internal registers. Serial bus master should not write or read program memory, or registers 00H, 37H to 39H or 4CH to 4EH, when this bit is set to "1".
  - 1 = at least one of the engines is clearing internal registers.
  - 0 = engine ready.
- **3A — Bit [3] EXT_CLK_USED**
  - 1 = external clock detected.
  - 0 = external clock not detected.
  - This bit is high when external clock signal on CLK pin is detected. CLK_DET_EN bit high in address 36 enables the clock detection.
- **3A — Bits [2:0] ENG1_INT, ENG2_INT, ENG3_INT**
  - 1 = interrupt set.
  - 0 = interrupt unset/cleared.
  - Interrupt bits for program execution engine 1, 2 and 3, respectively. These bits are set by END or INT instruction. Reading the interrupt bit clears the interrupt.

3B GPO

- The LP5523 has one General Purpose Output pin (GPO). Status of the pin can be controlled with this register. Also, INT pin can be configured to function as a GPO by setting the bit INT_CONF. When INT is configured to function as a GPO, output level is defined by the V_{DD} voltage.
- **3B — Bit [2] INT_CONF**
  - 0 = INT pin is set to function as an interrupt pin (default).
  - 1 = INT pin is configured to function as a GPO.
- **3B — Bit [1] GPO**
  - 0 = GPO pin state is low.
  - 1 = GPO pin state is high.
  - GPO pin is a digital CMOS output, and no pulldown resistor is needed.
- **3B — Bit [0] INT_GPO**
  - 0 = INT pin state is low (if INT_CONF = 1).
  - 1 = INT pin state is high (if INT_CONF = 1).
  - When INT pin’s GPO function is disabled, it operates as an open drain pin. INT signal is active low; i.e., when interrupt signal is sent, the pin is pulled to GND. External pullup resistor is needed for proper functionality.

Copyright © 2009–2013, Texas Instruments Incorporated

3C VARIABLE

- **3C — Bits [7:0] VARIABLE**
  - These bits are used for storing a global 8-bit variable. Variable can be used to control program flow.

3D RESET

- **3D — Bits [7:0] RESET**
  - Writing 11111111 into this register resets the LP5523. Internal registers are reset to the default values. Reading RESET register returns 00000000.

3E TEMP ADC CONTROL

- **3E — Bit [7] TEMP_MEAS_BUSY**
  - 1 = temperature measurement active.
  - 0 = temperature measurement done or not activated.
- **3E — Bit [2] EN_TEMP_SENSOR**
  - 1 = enables internal temperature sensor. Every time when EN_TEMP_SENSOR is written high a new measurement period is started. The length of the measurement period depends on temperature. At 25°C a measurement takes 20 milliseconds. Temperature can be read from register 3F.
  - 0 = temp sensor disabled.
- **3E — Bit [1] CONTINUOUS _CONV**
  - This bit is effective when EN_TEMP_SENSOR = 1.
  - 1 = continuous temperature measurement. Not active when the device is in power save.
  - 0 = new temperature measurement period initiated during startup or after exit from power-save mode.

3E — Bit [0] SEL_EXT_TEMP

- 1 = temperature compensation source register addr 40H.
  - 0 = temperature compensation source register addr 3FH.

3F TEMPERATURE READ

- **3F — Bits [7:0] TEMPERATURE**
  - These bits are used for storing an 8-bit temperature reading acquired from the internal temperature sensor. This register is a read-only register. Temperature reading is stored in 8-bit two's complement format — see the table below.

TEMPERATURE READ bits	Temperature interpretation (typ.) °C
11010111	−41
11011000	−40
...	...
11111110	−2
11111111	−1
00000000	0
00000001	1
00000010	2
...	...
01011000	88
01011001	89

40 TEMPERATURE WRITE

- **40 — Bits [7:0] TEMPERATURE**
  - These bits are used for storing an 8-bit temperature reading acquired from an external sensor, if such a sensor is used. Temperature reading is stored in 8-bit two's complement format, like in 3F TEMPERATURE READ register.

Copyright © 2009–2013, Texas Instruments Incorporated

NOTE

When writing temperature data outside the range of the temperature compensation: Values greater than 89°C will be set to 89°C; values less than −39°C will be set to −39°C.

41 LED TEST CONTROL

- LED test control register
  - **41 — Bit [7] EN_LEDTEST_ADC**
  - Writing this bit high (1) fires single LED test conversion. LED test measurement cycle is 2.7 milliseconds.
- **41 — Bit [6] EN_LEDTEST_INT**
  - 1 = interrupt signal will be sent to the INT pin when the LED test is accomplished.
  - 0 = no interrupt signal will be sent to the INT pin when the LED test is accomplished.
  - Interrupt can be cleared by reading STATUS/INTERRUPT register 3A.
- **41 — Bit [5] CONTINUOUS_CONV**
  - 1 = continuous LED test measurement. Not active in power-save mode.
  - 0 = continuous conversion is disabled.
- **41 — Bits [4:0] LED__TEST_CTRL**
  - These bits are used for choosing the LED driver output to be measured. V_{DD} , INT-pin and charge-pump output voltage can be measured, also.

LED_TEST_CTRL bits	Measurement
00000	D1
00001	D2
00010	D3
00011	D4
00100	D5
00101	D6
00110	D7
00111	D8
01000	D9
01001 to 01110	Reserved
01111	VOUT
10000	VDD
10001	INT-pin voltage
10010 to 11111	N/A

42 LED TEST ADC

- **42 — Bits [7:0] LED_TEST_ADC**
  - This is used to store the LED test result. Read-only register. LED test ADC's least significant bit corresponds to 30 mV. The measured voltage V (typ.) is calculated as follows: V = (RESULT(DEC) x 0.03 - 1.478 V. For example, if the result is 10100110 = 166(DEC), the measured voltage is 3.50V (typ.). See the figure below.

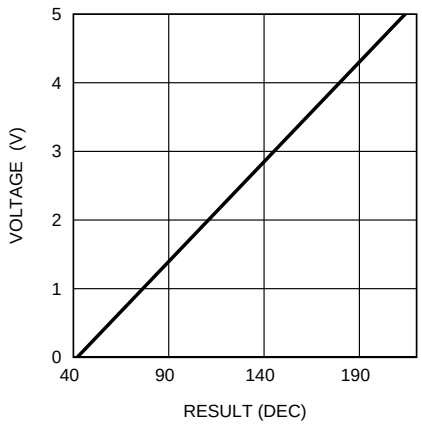

Figure 25. LED Test Results vs. Measured Voltage

45 ENGINE1 VARIABLE A

- **45 — Bits [7:0] VARIABLE FOR ENGINE1**
  - These bits are used for Engine 1 local variable. Read-only register.

46 ENGINE2 VARIABLE A

- **46 — Bits [7:0] VARIABLE FOR ENGINE2**
  - These bits are used for Engine 2 local variable. Read-only register.

47 ENGINE3 VARIABLE A

- **47 — Bits [7:0] VARIABLE FOR ENGINE3**
  - These bits are used for Engine 3 local variable. Read-only register.

48 MASTER FADER1

- **48 — Bits [7:0] MASTER_FADER**
  - An 8-bit register to control all the LED-drivers mapped to MASTER FADER1. Master fader allows the user to control dimming of multiple LEDS with a single serial bus write. This is a faster method to control the dimming of multiple LEDs compared to the dimming done with the PWM registers (address 16H to 1EH), which would need multiple writes.

49 MASTER FADER2

- **49 — Bits [7:0] MASTER_FADER**
  - An 8-bit register to control all the LED-drivers mapped to MASTER FADER2. See MASTER FADER1 description.

4A MASTER FADER3

- **4A — Bits [7:0] MASTER_FADER**
  - An 8-bit register to control all the LED-drivers mapped to MASTER FADER3. See MASTER FADER1 description.

4C ENG1 PROG START ADDR

- Program memory allocation for program execution engines is defined with PROG START ADDR registers.
  - **4C — Bits [6:0] — ADDR**
  - Engine 1 program start address.

4D ENG2 PROG START ADDR

- **4D — Bits [6:0] — ADDR**
  - Engine 2 program start address.

4E ENG3 PROG START ADDR

- **4E — Bits [6:0] — ADDR**
  - Engine 3 program start address.

Copyright © 2009–2013, Texas Instruments Incorporated

4F PROG MEM PAGE SELECT

- **4F — Bits [2:0] — PAGE_SEL**
  - These bits select the program memory page. The program memory is divided into six pages of 16 instructions; thus, the total amount of the program memory is 96 instructions.

70H ENG1 MAPPING MSB

- Valid engine 1-to-LED -mapping information can be read from ENG1 MAPPING register.
- **70H — Bit [7] GPO**
  - 1 = GPO pin is mapped to the program execution engine 1.
  - 0 = GPO pin non-mapped to the program execution engine 1.
- **70H — Bit [0] D9**
  - 1 = D9 pin is mapped to the program execution engine 1.
  - 0 = D9 pin non-mapped to the program execution engine 1.

71H ENG1 MAPPING LSB

- **71H — Bit [7] D8**
  - 1 = D8 pin is mapped to the program execution engine 1.
  - 0 = D8 pin non-mapped to the program execution engine 1.
- **71H — Bit [6] D7**
  - 1 = D7 pin is mapped to the program execution engine 1.
  - 0 = D7 pin non-mapped to the program execution engine 1.
- **71H — Bit [5] D6**
  - 1 = D6 pin is mapped to the program execution engine 1.
  - 0 = D6 pin non-mapped to the program execution engine 1.
- **71H — Bit [4] D5**
  - 1 = D5 pin is mapped to the program execution engine 1.
  - 0 = D5 pin non-mapped to the program execution engine 1.
- **71H — Bit [3] D4**
  - 1 = D4 pin is mapped to the program execution engine 1.
  - 0 = D4 pin non-mapped to the program execution engine 1.
- **71H — Bit [2] D3**
  - 1 = D3 pin is mapped to the program execution engine 1.
  - 0 = D3 pin non-mapped to the program execution engine 1.
- **71H — Bit [1] D2**
  - 1 = D2 pin is mapped to the program execution engine 1.
  - 0 = D2 pin non-mapped to the program execution engine 1.
- **71H — Bit [0] D1**
  - 1 = D1 pin is mapped to the program execution engine 1.
  - 0 = D1 pin non-mapped to the program execution engine 1.

72H ENG2 MAPPING MSB

- Valid engine 2-to-LED -mapping information can be read from ENG2 MAPPING register.
- **72H — Bit [7] GPO**
- See description above for ENG1 MAPPING register.
- **72H — Bit [0] D9**
- See description above for ENG1 MAPPING register.

73H ENG2 MAPPING LSB

- **73H — Bit [7] D8 to Bit [0] D1**
- See description above for ENG1 MAPPING register.

74H ENG3 MAPPING MSB

- Valid engine 3-to-LED -mapping information can be read from ENG3 MAPPING register.

Copyright © 2009–2013, Texas Instruments Incorporated

- **74H — Bit [7] GPO**
- See description above for ENG1 MAPPING register.
- **74H — Bit [0] D9**
- See description above for ENG1 MAPPING register.

75H ENG3 MAPPING LSB

- **75H — Bit [7] D8 to Bit [0] D1**
- See description above for ENG1 MAPPING register.

76H GAIN_CHANGE_CTRL

- With hysteresis and timer bits the user can optimize the charge pump performance to better meet the requirements of the application at hand. Some applications need to be optimized for efficiency and others need to be optimized for minimum EMI, for example.
- **76H - Bits[7:6] THRESHOLD**
- Threshold voltage (typ.) pre-setting. Bits set the threshold voltage at which the charge-pump gain changes from 1.5x to 1x. The threshold voltage is defined as the voltage difference between highest voltage output (D1 to D6) and input voltage V_{DD}: $V_{THRESHOLD} = V_{DD}$ - MAX(voltage on D1 to D6).
  - If $V_{THRESHOLD}$ is larger than the set value (100 mV to 400 mV), the charge pump is in 1x mode.
  - 00 = 400 mV
  - 01 = 300 mV
  - 10 = 200 mV
  - 11 = 100 mV

NOTE

Values above are typical and should not be used as product-specification.

NOTE

Writing to threshold [7:6] bits by the user overrides factory settings. Factory settings aren't user-accessible.

  - **76H - Bit [5] ADAPTIVE_TRESH_EN**
  - 1 = Adaptive threshold enabled.
    - 0 = Adaptive threshold disabled.
    - Gain-change hysteresis prevents the mode from toggling back and forth (1x -> 1.5x -> 1x...) , which would cause ripple on V_{IN} and LED flicker. When the adaptive threshold is enabled, the width of the hysteresis region depends on the choice of threshold bits (see above), saturation of the current sources, charge pump load current, PWM overlap and temperature.
  - **76H - Bits [4:3] TIMER**
  - A forced mode change from 1.5x to 1x is attempted at the interval specified with these bits. Mode change is allowed if there is enough voltage over the LED drivers to ensure proper operation. Set FORCE_1x to "1" (see below) to activate this feature.
    - 00 = 5ms
    - 01 = 10 ms
    - 10 = 50 ms
    - 11 = infinite. The charge pump switches gain from 1x mode to 1.5x mode only. The gain reset back to 1x is enabled under certain conditions, for example in the powersave mode.
  - **76H - Bit [2] FORCE_1x**
  - Activates forced mode change. In forced mode, charge pump mode change from 1.5x to 1x is attempted at the constant interval specified with the TIMER bits.
    - 1 = forced mode changes enabled.
    - 0 = forced mode changes disabled.

Copyright © 2009–2013, Texas Instruments Incorporated

Instruction Set

The LP5523 has three independent programmable execution engines. All the program execution engines have their own program memory block allocated by the user. Note that in order to access program memory the operation mode needs to be *load program*, at least for one of the three program execution engines. Program execution is clocked with a 32.7 kHz clock. This clock can be generated internally or external 32 kHz clock can be connected to CLK pin. Using external clock enables synchronization of LED timing to the external clock signal.

Supported instruction set is listed in the tables below:

Table 4. LP5523 LED Driver Instructions

Inst.	Bit [15]	Bit [14]	Bit [13]	Bit [12]	Bit [11]	Bit [10]	Bit [9]	Bit [8]	Bit [7]	Bit [6]	Bit [5]	Bit [4]	Bit [3]	Bit [2]	Bit [1]	Bit [0]
ramp(1)	0	pre-scale	step time					sign	# of increments							
ramp(2)	1	0	0	0	0	1	0	0	0	0	pre-scale	sign	step time		# of increments	
set_pwm(3)	0	1	0	0	0	0	0	0	PWM value							
set_pwm(2)	1	0	0	0	0	1	0	0	0	1	1	0	0	0	PWM value	
wait	0	pre-scale	time					0	0	0	0	0	0	0	0	0

(1) This opcode is used with numerical operands.
(2) This opcode is used with variables.
(3) This opcode is used with numerical operands.

Table 5. LP5523 LED Mapping Instructions

Inst.	Bit [15]	Bit [14]	Bit [13]	Bit [12]	Bit [11]	Bit [10]	Bit [9]	Bit [8]	Bit [7]	Bit [6]	Bit [5]	Bit [4]	Bit [3]	Bit [2]	Bit [1]	Bit [0]
mux_ld_start	1	0	0	1	1	1	1	0	0	SRAM address 0-95						
mux_map_start	1	0	0	1	1	1	0	0	0	SRAM address 0-95						
mux_ld_end	1	0	0	1	1	1	0	0	1	SRAM address 0 - 95						
mux_sel	1	0	0	1	1	1	0	1	0	LED select						
mux_clr	1	0	0	1	1	1	0	1	0	0	0	0	0	0	0	0
mux_map_next	1	0	0	1	1	1	0	1	1	0	0	0	0	0	0	0
mux_map_prev	1	0	0	1	1	1	0	1	1	1	0	0	0	0	0	0
mux_ld_next	1	0	0	1	1	1	0	1	1	0	0	0	0	0	0	1
mux_ld_prev	1	0	0	1	1	1	0	1	1	1	0	0	0	0	0	1
mux_ld_addr	1	0	0	1	1	1	1	1	0	SRAM address 0-95						
mux_map_addr	1	0	0	1	1	1	1	1	1	SRAM address 0-95						

Table 6. LP5523 Branch Instructions(1)

Inst.	Bit [15]	Bit [14]	Bit [13]	Bit [12]	Bit [11]	Bit [10]	Bit [9]	Bit [8]	Bit [7]	Bit [6]	Bit [5]	Bit [4]	Bit [3]	Bit [2]	Bit [1]	Bit [0]
rst	0	0	0	0	0	0	0	0	0	0	0	0	0	0	0	0
branch(2)	1	0	1	loop count						step number						
branch(3)	1	0	0	0	0	1	1	step number							loop count	
int	1	1	0	0	0	1	0	0	0	0	0	0	0	0	0	0
end	1	1	0	int	reset	0	0	0	0	0	0	0	0	0	0	0

(1) X means do not care.
(2) This opcode is used with numerical operands.
(3) This opcode is used with variables.

Copyright © 2009–2013, Texas Instruments Incorporated

Table 6. LP5523 Branch Instructions(1) (continued)

trigger	1	1	1	wait for trigger						send a trigger						0
				ext. trig	X	X	E3	E2	E1	ext. trig	X	X	E3	E2	E1	
jne	1	0	0	0	1	0	0	Number of instructions to be skipped if the operation returns true					variable 1		variable 2	
jl	1	0	0	0	1	0	1	Number of instructions to be skipped if the operation returns true					variable 1		variable 2	
jge	1	0	0	0	1	1	0	Number of instructions to be skipped if the operation returns true					variable 1		variable 2	
je	1	0	0	0	1	1	1	Number of instructions to be skipped if the operation returns true					variable 1		variable 2	

Table 7. LP5523 Data Transfer and Arithmetic Instructions

Inst.	Bit [15]	Bit [14]	Bit [13]	Bit [12]	Bit [11]	Bit [10]	Bit [9]	Bit [8]	Bit [7]	Bit [6]	Bit [5]	Bit [4]	Bit [3]	Bit [2]	Bit [1]	Bit [0]
ld	1	0	0	1	target variable		0	0	8-bit value							
add (i)	1	0	0	1	target variable		0	1	8-bit value							
add (ii)	1	0	0	1	target variable		1	1	0	0	0	0	variable 1		variable 2	
sub (i)	1	0	0	1	target variable		1	0	8-bit value							
sub (ii)	1	0	0	1	target variable		1	1	0	0	0	1	variable 1		variable 2	

LED Driver Instructions

Ramp

This is the instruction useful for smoothly changing from one PWM value into another PWM value on the D1 to D9 outputs; in other words, generating ramps (with a negative or positive slope). The LP5523 allows programming very fast and very slow ramps.

Ramp instruction generates a PWM ramp, using the effective PWM value as a starting value. At each ramp step the output is incremented/decremented by one unit, unless the number of increments is 0. Time span for one ramp step is defined with *prescale* -bit [14] and *step time* -bits [13:9]. Prescale = 0 sets 0.49 ms cycle time and prescale = 1 sets 15.6 ms cycle time; so the minimum time span for one step is 0.49 ms (prescale * step time span = 0.49ms x 1) and the maximum time span is 15.6 ms x 31 = 484ms/step.

Number of increments value defines how many steps will be taken during one ramp instruction; increment maximum value is 255d, which corresponds increment from zero value to the maximum value. If PWM reaches minimum/maximum value (0/255) during the ramp instruction, ramp instruction will be executed to the end regardless of saturation. This enables ramp instruction to be used as a combined ramp & wait instruction. Note: Ramp instruction is *wait* instruction when the increment bits [7:0] are set to zero.

Programming ramps with variables is very similar to programming ramps with numerical operands. The only difference is that step time and number of increments are captured from variable registers, when the instruction execution is started. If the variables are updated after starting the instruction execution, it will have no effect on instruction execution. Again, at each ramp step the output is incremented/decremented by one unless *increment* is 0. Time span for one step is defined with *prescale* and *step time* bits. Step time is defined with variable A, B, C or D. Variables A, B and C are set with *ld*-instruction. Variable D is a global variable and can be set by writing the VARIABLE register (address 3C). LED TEST ADC register (address 42) can be used as a source for the variable D, as well. Note: Variable A is the only local variable which can be read throughout the serial bus. Of course, the variable stored in 3CH can be read (and written), too.

Setting register 06H, 07H, or 08H bit LOG_EN high/low sets logarithmic (1) or linear ramp (0). By using the logarithmic ramp setting the visual effect appears like a linear ramp, because the human eye behaves in a logarithmic way.

 Copyright © 2009–2013, Texas Instruments Incorporated

Name	Value (d)	Description
prescale	0	Divides master clock (32.7 kHz) by 16 = 2048 Hz -> 0.488 ms cycle time
	1	Divides master clock (32.7 kHz) by 512 = 64 Hz -> 15.625 ms cycle time
sign	0	Increase PWM output
	1	Decrease PWM output
step time (1)	1 - 31	One ramp increment done in (step time) x (prescale).
# of increments (1)	0 - 255	The number of increment/decrement cycles. Note: Value 0 takes the same time as increment by 1, but it is the *wait* instruction.
step time (2)	0 - 3	One ramp increment done in (step time) x (prescale). Step time is loaded with the value (5 LSB bits) of the variable defined below. 0 = local variable A 1 = local variable B 2 = global variable C 3 = register address 3CH variable D value, or register address 42H value. The value of the variable should be from 00001b to 11111b (1d to 31d) for correct operation.
# of increments (2)	0 - 3	The number of increment/decrement cycles. Value is taken from variable defined below: 0 = local variable A 1 = local variable B 2 = global variable C 3 = register address 3CH variable D value, or register address 42H value.

(1) Valid for numerical operands.
(2) Valid for variables.

Ramp Instruction Application Example

Suppose that the LED dimming is controlled according to the linear scale and effective PWM value at the moment t=0 is 140d (~55%,), as shown in the figure below, and we want to reach a PWM value of 148d (~58%) at the moment t = 1.5s. The parameters for the RAMP instruction will be:

- Prescale = 1 → 15.625 ms cycle time
- Step time = 12 → step time span will be 12*15.625 ms = 187.5 ms
- Sign = 0 → increase PWM output
- # of increments = 8 → take 8 steps

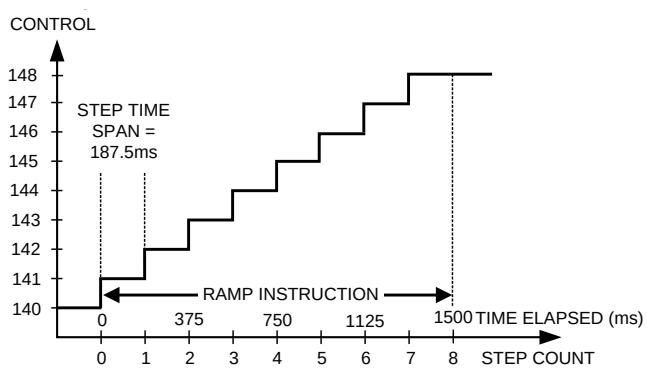

Figure 26. Example of Ramp Instruction

Set_PWM

This instruction is used for setting the PWM value on the outputs D1 to D9 without any ramps. Set PWM output value from 0 to 255 with PWM value bits [7:0]. Instruction execution takes sixteen 32 kHz clock cycles (=488 µs).

Name	Value (d)	Description
PWM value (1)	0 - 255	PWM output duty cycle 0 - 100%
variable (2)	0 - 3	0 = local variable A 1 = local variable B 2 = global variable C 3 = register address 3CH variable D value, or register address 42H value.

(1) Valid for numerical operands.
(2) Valid for variables.

Wait

When a *wait* instruction is executed, the engine is set in wait status, and the PWM values on the outputs are frozen.

Name	Value (d)	Description
prescale	0	Divide master clock (32.7 kHz) by 16 which means 0.488 ms cycle time.
	1	Divide master clock (32 768 Hz) by 512 which means 15.625 ms cycle time.
time	1 - 31	Total wait time will be = (time) x (prescale). Maximum 484 ms, minimum 0.488 ms.

LED Mapping Instructions

These instructions define the engine-to-LED mapping. The mapping information is stored in a table, which is stored in the SRAM (program memory of the LP5523). LP5523 has three program execution engines which can be mapped to 9 LED drivers or to one GPO pin. One engine can control one or multiple LED drivers. There are totally eleven instructions for the engine-to-LED-driver control: *mux_ld_start, mux_map_start, mux_ld_end, mux_sel, mux_clr, mux_map_next, mux_map_prev, mux_ld_next, mux_ld_prev, mux_ld_addr* and *mux_map_addr*.

MUX_LD_START; MUX_LD_END

Mux_ld_start and mux_ld_end define the mapping table location in the memory.

Name	Value (d)	Description
SRAM address	0-95	Mapping table start/end address

MUX_MAP_START

Mux_map_start defines the mapping table start address in the memory, and the first row of the table will be activated (mapped) at the same time.

Name	Value (d)	Description
SRAM address	0-95	Mapping table start address

MUX_SEL

With mux_sel instruction one, and only one, LED driver (or the GPO-pin) can be connected to a program execution engine. Connecting multiple LEDs to one engine is done with the mapping table. After the mapping has been released from an LED, PWM register value will still control the LED brightness. If the mapping is released from the GPO pin, serial bus control takes over the GPO state.

Copyright © 2009–2013, Texas Instruments Incorporated

Name	Value (d)	Description
LED select	0-16	0 = no drivers selected
		1 = LED1 selected
		2 = LED2 selected
		...
		9 = LED9 selected
		16 = GPO

MUX_CLR

Mux_clr clears engine-to-driver mapping. After the mapping has been released from an LED, the PWM register value will still control the LED brightness. If the mapping is released from the GPO pin, serial bus control takes over the GPO state.

MUX_MAP_NEXT

This instruction sets the next row active in the mapping table each time it is called. For example, if the 2nd row is active at this moment, after *mux_map_next* instruction call the 3rd row will be active. If the mapping table end address is reached, activation will roll to the mapping table start address next time when the *mux_map_next* instruction is called. Engine will not push a new PWM value to the LED driver output before *set_pwm* or *ramp* instruction is executed. If the mapping has been released from an LED, the value in the PWM register will still control the LED brightness. If the mapping is released from the GPO pin, serial bus control takes over the GPO state.

MUX_LD_NEXT

Similar than the mux_map_next instruction, but only the index pointer will be set to point to the next row i.e. no mapping will be set and the engine-to-LED-driver connection will not be updated.

MUX_MAP_PREV

This instruction sets the previous row active in the mapping table each time it is called. For example, if the 3rd row is active at this moment, after *mux_map_prev* instruction call the 2nd row will be active. If the mapping table start address is reached, activation will roll to the mapping table end address next time the *mux_map_prev* instruction is called. Engine will not push a new PWM value to the LED driver output before *set_pwm* or *ramp* instruction is executed. If the mapping has been released from an LED, the value in the PWM register will still control the LED brightness. If the mapping is released from the GPO pin, serial bus control takes over the GPO state.

MUX_LD_PREV

Similar than the mux_map_prev instruction, but only the index pointer will be set to point to the previous row i.e. no mapping will be set and the engine-to-LED-driver connection will not be updated.

MUX_MAP_ADDR

Mux_map_addr sets the index pointer to point the mapping table row defined by bits [6:0] and sets the row active. Engine will not push a new PWM value to the LED driver output before *set_pwm* or *ramp* instruction is executed. If the mapping has been released from an LED, the value in the PWM register will still control the LED brightness. If the mapping is released from the GPO pin, serial bus control takes over the GPO state.

Name	Value (d)	Description
SRAM address	0-95	Any SRAM address containing mapping data.

MUX_LD_ADDR

Mux_ld_addr sets the index pointer to point the mapping table row defined by bits [6:0], but the row will not be set active.

Name	Value (d)	Description
SRAM address	0-95	Any SRAM address containing mapping data.

Branch Instructions

BRANCH

Branch instruction is mainly indented for repeating a portion of the program code several times. Branch instruction loads *step number* value to program counter. *Loop count* parameter defines how many times the instructions inside the loop are repeated. The LP5523 supports nested looping, i.e., loop inside loop. The number of nested loops is not limited. Instruction takes sixteen 32 kHz clock cycles.

Name	Accepted Value (d)	Description
loop count (1)	0-63	The number of loops to be done. “0” means an infinite loop.
step number	0-95	The step number to be loaded to program counter.
loop count (2)	0-3	Selects the variable for loop count value. Loop count is loaded with the value of the variable defined below.
		0 = local variable A
		1 = local variable B
		2 = global variable C
		3 = register address 3CH variable D value, or register address 42H value

(1) Valid for numerical operands.
(2) Valid for variables.

INT

Send interrupt to processor by pulling the INT pin down and setting corresponding status bit high. Interrupt can be cleared by reading interrupt bits in STATUS/INTERRUPT register at address 3A.

Name	Value	Description
int	0	No interrupt will be sent. PWM register values will remain intact.
	1	Reset program counter value to “0” and send interrupt to processor by pulling the INT pin down and setting corresponding status bit high to notify that program has ended. PWM register values will remain intact. Interrupt can be cleared by reading interrupt bits in STATUS/INTERRUPT register at address 3A.
reset	0	Reset program counter value to “0” and hold. PWM register values will remain intact.
	1	Reset program counter value to “0” and hold. PWM register values of the non-mapped drivers will remain. PWM register values of the mapped drivers will be set to "0000 0000". On completion of int instruction with this bit set to "1" the master fader registers are set to zero as follows: Program execution engine 1 sets MASTER FADER 1 (48H) to zero, engine 2 sets MASTER FADER 2 (49H) to zero and engine 3 sets MASTER FADER 3 (4AH) to zero.

RST

Rst instruction resets Program Counter register (address 37H, 38H, or 39H) and continues executing the program from the program start address defined in 4C-4E. Instruction takes sixteen 32 kHz clock cycles. Note that default value for all program memory registers is 0000H, which is the *rst* instruction.

END

End program execution. Instruction takes sixteen 32 kHz clock cycles.

TRIGGER

Wait or send triggers can be used to, for example, synchronize operation between the program execution engines. *Send trigger* instruction takes sixteen 32 kHz clock cycles and *wait for trigger* takes at least sixteen 32 kHz clock cycles. The receiving engine stores the triggers which have been sent. Received triggers are cleared by *wait for trigger* instruction. *Wait for trigger* instruction is executed until all the defined triggers have been received. (Note: several triggers can be defined in the same instruction.)

External trigger input signal must stay low for at least two 32 kHz clock cycles to be executed. Trigger output signal is three 32 kHz clock cycles long. External trigger signal is active low, i.e., when trigger is sent/received the pin is pulled to GND. Send external trigger is masked; i.e., the device which has sent the trigger will not recognize it. If send and wait external trigger are used on the same instruction, the send external trigger is executed first, then the wait external trigger.

Copyright © 2009–2013, Texas Instruments Incorporated

Name	Value (d)	Description
wait for trigger	0 - 31	Wait for trigger from the engine(s). Several triggers can be defined in the same instruction. Bit [7] engages engine 1, bit [8] engine 2, bit [9] engine 3 and bit [12] is for external trigger I/O. Bits [10] and [11] are not in use.
send a trigger	0 - 31	Send a trigger to the engine(s). Several triggers can be defined in the same instruction. Bit [1] engages engine 1, bit [2] engine 2, bit [3] engine 3 and bit [6] is for external trigger I/O. Bits [4] and [5] are not in use.

The LP5523 instruction set includes the following conditional jump instructions: *jne* (jump if not equal); *jge* (jump if greater or equal); *jl* (jump if less); *je* (jump if equal). If the condition is true, a certain number of instructions will be skipped (i.e., the program jumps forward to a location relative to the present location). If condition is false, the next instruction will be executed.

Name	Value (d)	Description
number of instructions to be skipped if the operation returns true.	0 - 31	The number of instructions to be skipped when the statement is true. Note: value 0 means redundant code.
variable 1	0 - 3	Defines the variable to be used in the test: 0 = local variable A 1 = local variable B 2 = global variable C 3 = register address 3CH variable, or register address 42H value.
variable 2	0 - 3	Defines the variable to be used in the test: 0 = local variable A 1 = local variable B 2 = global variable C 3 = register address 3CH variable, or register address 42H value.

Arithmetic Instructions

LD

This instruction is used to assign a value into a variable; the previous value in that variable is overwritten. Each of the engines have two local variables, called *A* and *B*. The variable *C* is a global variable.

Name	Value (d)	Description
target variable	0 - 2	0 = variable A 1 = variable B 2 = variable C
8-bit value	0 - 255	Variable value

ADD

Operator either adds 8-bit value to the current value of the target variable, or adds the value of the *variable 1* (A, B, C or D) to the value of the *variable 2* (A, B, C or D) and stores the result in the register of variable A, B or C. Variables overflow from 255 to 0.

Name	Value (d)	Description
8-bit value(1)	0 - 255	The value to be added.
target variable	0 - 2	0 = variable A 1 = variable B 2 = variable C

(1) Valid for numerical operands.

Copyright © 2009–2013, Texas Instruments Incorporated

Name	Value (d)	Description
variable 1 (2)	0 - 3	0 = local variable A 1 = local variable B 2 = global variable C 3 = register address 3CH variable, or register address 42H value.
variable 2 (2)	0 - 3	0 = local variable A 1 = local variable B 2 = global variable C 3 = register address 3CH variable, or register address 42H value.

(2) Valid for variables.

SUB

SUB Operator either subtracts 8-bit value from the current value of the target variable, or subtracts the value of the *variable 2* (A, B, C or D) from the value of the *variable 1* (A, B, C or D) and stores the result in the register of target variable (A, B or C). Variables overflow from 0 to 255.

Name	Value (d)	Description
8-bit value (1)	0 - 255	The value to be added.
target variable	0 - 2	0 = variable A 1 = variable B 2 = variable C
variable 1 (2)	0 - 3	0 = local variable A 1 = local variable B 2 = global variable C 3 = register address 3CH variable, or register address 42H value.
variable 2 (2)	0 - 3	0 = local variable A 1 = local variable B 2 = global variable C 3 = register address 3CH variable, or register address 42H value.

(1) Valid for numerical operands.
(2) Valid for variables.

Automatic Power-Save Mode

Automatic power-save mode is enabled when POWERSAVE_EN bit in register address 36H is “1". Almost all analog blocks are powered down in power-save if an external clock signal is used. Only the charge-pump protection circuits remain active. However, if the internal clock has been selected, only charge pump and LED drivers are disabled during the power save; the digital part of the LED controller needs to stay active. In both cases the charge pump enters the weak 1x mode. In this mode the charge pump utilizes a passive current limited keep-alive switch, which keeps the output voltage at the battery level. During the program execution LP5523 can enter power save if there is no PWM activity in any of the LED driver outputs. To prevent short power-save sequences during program execution, LP5523 has an instruction look-ahead filter. During program execution engine 1, engine 2 and engine 3 instructions are constantly analyzed, and if there are time intervals of more than 50 ms in length with no PWM activity on LED driver outputs, the device will enter power save. In power-save mode program execution continues uninterrupted. When an instruction that requires PWM activity is executed, a fast internal-startup sequence will be started automatically.

 Copyright © 2009–2013, Texas Instruments Incorporated

PWM Power-Save Mode

PWM cycle power-save mode is enabled when register 36 bit [2] PWM_PS_EN is set to “1”. In PWM power-save mode analog blocks are powered down during the "down time" of the PWM cycle. Which blocks are powered down depends whether the external or internal clock is used. While the Automatic Power-Save Mode (see above) saves energy when there is no PWM activity at all, the PWM Power-Save mode saves energy during PWM cycles. Like the Automatic Power-Save Mode, PWM Power-Save Mode also works during program execution. Figure 27 shows the principle of the PWM power-save technique. An LED on D9 output is driven at 50%PWM, 5mA current (top waveform). After PWM Power-save enable, the LED-current remains the same, but the LP5523 input current drops down to ~50 µA level when the LED is OFF, or to ~200 µA level when the charge-pump-powered output(s) are used.

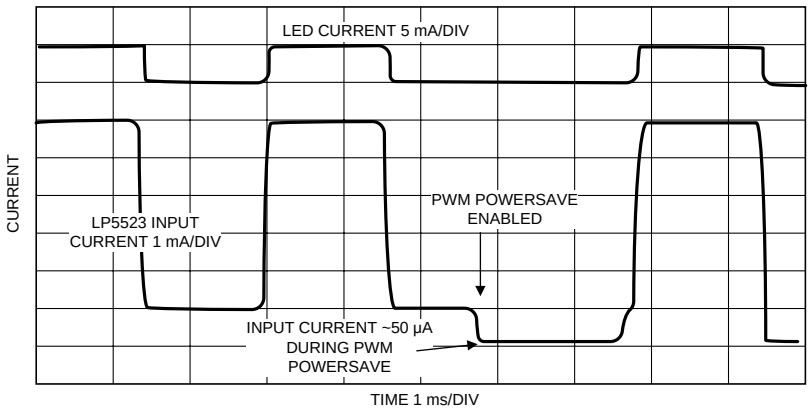

Figure 27. PWM Power-save Principle. External Clock, V_{DD} = 3.6V

Recommended External Components

The LP5523 requires 4 external capacitors for proper operation. Surface-mount multi-layer ceramic capacitors are recommended. Tantalum and aluminium capacitors are not recommended because of their high ESR. For the flying capacitors (C_1 and C_2) multi-layer ceramic capacitors should always be used. These capacitors are small, inexpensive and have very low equivalent series resistance (ESR < 20 mΩ typ.). Ceramic capacitors with X7R or X5R temperature characteristic are preferred for use with the LP5523. These capacitors have tight capacitance tolerance (as good as ±10%) and hold their value over temperature (X7R: ±15% over −55°C to 125°C; X5R: ±15% over −55°C to 85°C). Capacitors with Y5V or Z5U temperature characteristic are generally not recommended for use with the LP5523. Capacitors with these temperature characteristics typically have wide capacitance tolerance (+80%, −20%) and vary significantly over temperature (Y5V: +22%, −82% over −30°C to +85°C range; Z5U: +22%, −56% over +10°C to +85°C range). Under some conditions, a nominal 1 µF Y5V or Z5U capacitor could have a capacitance of only 0.1 µF. Such detrimental deviation is likely to cause Y5V and Z5U capacitors to fail to meet the minimum capacitance requirements of the LP5523.

For proper operation it is necessary to have at least 0.24 µF of effective capacitance for each of the flying capacitors under all operating conditions. The output capacitor C_{OUT} directly affects the magnitude of the output ripple voltage. In general, the higher the value of C_{OUT}, the lower the output ripples magnitude. For proper operation it is recommended to have at least 0.50 µF of effective capacitance for C_{IN} and C_{OUT} under all operating conditions. The voltage rating of all four capacitors should be 6.3V; 10V is recommended.

Table 8 below lists recommended external components from some leading ceramic capacitor manufacturers. It is strongly recommended that the LP5523 circuit be thoroughly evaluated early in the design-in process with the mass-production capacitors of choice. This will help ensure that any variability in capacitance does not negatively impact circuit performance.

Table 8. Recommended External Components

Model	Type	Vendor	Voltage Rating	Package Size
1 µF for C_{OUT} and C_{IN}				
C1005X5R1A105K	Ceramic X5R	TDK	10V	0402
LMK105BJ105KV-F	Ceramic X5R	Taiyo Yuden	10V	0402
ECJ0EB1A105M	Ceramic X5R	Panasonic	10V	0402
ECJUVBPA105M	Ceramic X5R, array of two	Panasonic	10V	0504
470 nF for C_1 and C_2				
C1005X5R1A474K	Ceramic X5R	TDK	10V	0402
LMK105BJ474KV-F	Ceramic X5R	Taiyo Yuden	10V	0402
ECJ0EB0J474K	Ceramic X5R	Panasonic	6.3V	0402
LEDs		User defined. Note that D7, D8 and D9 outputs are powered from VDD when specifying the LEDs.		

Copyright © 2009–2013, Texas Instruments Incorporated

Typical Applications

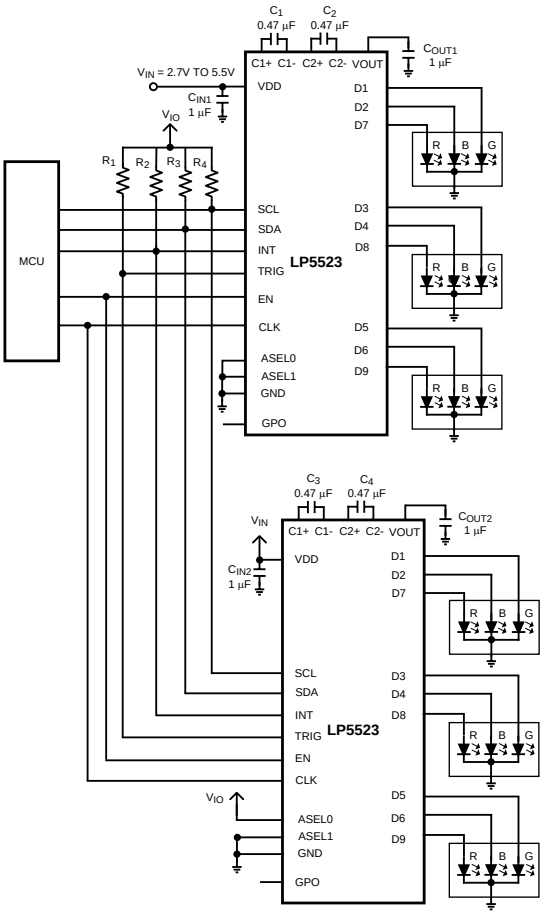

Figure 28. Typical Application Circuits

The LP5523 enables up to four parallel devices together, which can drive up to 12 RGB LEDs or 36 single LEDs. This diagram shows the connections for two LP5523 devices for six RGB LEDs. Note that D7, D8 and D9 outputs are used for the red LEDs. The SCL and SDA lines should each have a pullup resistor placed somewhere on the line (R3 and R4; The pullup resistors are normally located on the bus master.). In typical applications values of 1.8k to 4.7k are used, depending on the bus capacitance, I/O voltage and the desired communication speed. INT and TRIG are open-drain pins, so they need pullup resistors. Typical values for R1 and R2 are from 120k to 180k for two devices.

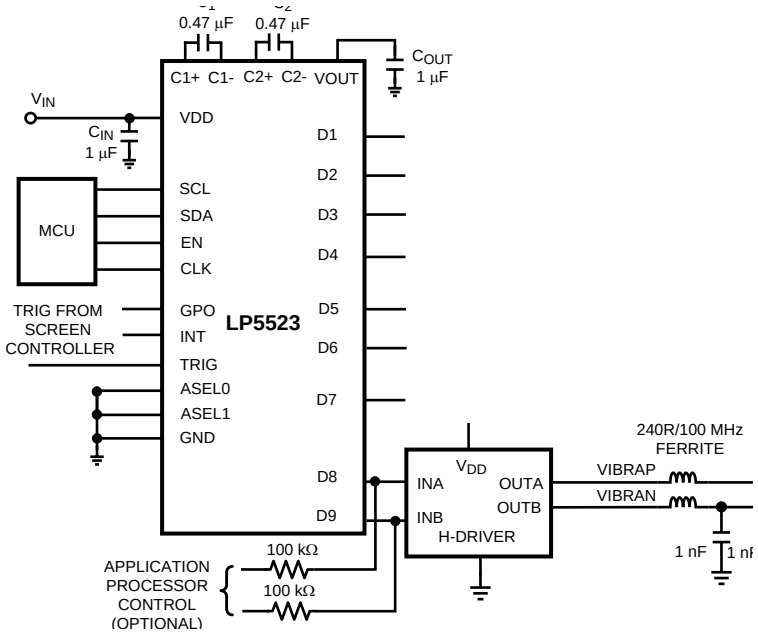

Figure 29. Example Schematic – Vibra Motor

Figure 29 depicts an example schematic for LP5523 driving a vibra motor. A vibra motor can be used for haptic feedback with touch screens and also for normal vibra operation (call indication etc.). Battery-powered D8 and D9 outputs are used for controlling the H-Driver (Microchip TC442x-series or equivalent), which drives the vibra motor. (The remaining outputs D1 to D7 can be used for LED driving, of course.) With H-Driver the rotation direction of the vibra motor can be changed. For vibra operation user can load several programs to the LP5523 program memory in order to get interesting vibration effects, with changing frequency, “ramps” , etc.

If the application processor has controls for a vibra motor they can be connected to H-Driver INA and INB as shown in Figure 29. In this case the vibra can be controlled directly with application processor and also with LP5523. If application processor control is not needed, then the 100 kΩ resistors should be connected to GND.

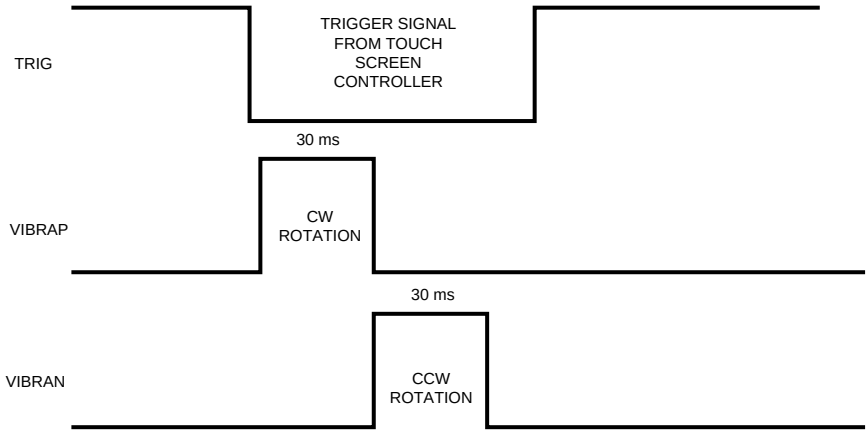

Figure 30. H-Driver Control Waveform

Copyright © 2009–2013, Texas Instruments Incorporated

A simple waveform for H-driver control is shown in Figure 30. At first the motor rotates in CW direction for 30 ms, following a rotation of 30 ms in CCW direction. The sequence is started when the TRIG signal is pulled down (active low signal). the TRIG signal is received from the touch screen controller. After the sequence is executed, the LP5523 will wait for another TRIG signal to start the sequence again. TRIG signal timing is not critical; it does not have to be pulled down for the whole sequence duration like in the example. For call indication, etc. purposes the program can be changed; for example, rotation times can be adjusted to get desired haptic reaction. Direct control of D8 and D9 output is also possible through the control registers, if programming is not desired.

Copyright © 2009–2013, Texas Instruments Incorporated

REVISION HISTORY

Changes from Revision C (April 2013) to Revision D	Page
• Changed layout of National Data Sheet to TI format	49

Copyright © 2009–2013, Texas Instruments Incorporated

PACKAGING INFORMATION

Orderable Device	Status (1)	Package Type	Package Drawing	Pins	Package Qty	Eco Plan (2)	Lead/Ball Finish (6)	MSL Peak Temp (3)	Op Temp (°C)	Device Marking (4/5)	Samples
LP5523TM/NOPB	ACTIVE	DSBGA	YFQ	25	250	Green (RoHS & no Sb/Br)	SNAGCU	Level-1-260C-UNLIM	-30 to 85	5523	Samples
LP5523TMX/NOPB	ACTIVE	DSBGA	YFQ	25	3000	Green (RoHS & no Sb/Br)	SNAGCU	Level-1-260C-UNLIM	-30 to 85	5523	Samples

(1) The marketing status values are defined as follows:
ACTIVE: Product device recommended for new designs.
LIFEBUY: TI has announced that the device will be discontinued, and a lifetime-buy period is in effect.
NRND: Not recommended for new designs. Device is in production to support existing customers, but TI does not recommend using this part in a new design.
PREVIEW: Device has been announced but is not in production. Samples may or may not be available.
OBSOLETE: TI has discontinued the production of the device.

(2) Eco Plan - The planned eco-friendly classification: Pb-Free (RoHS), Pb-Free (RoHS Exempt), or Green (RoHS & no Sb/Br) - please check http://www.ti.com/productcontent for the latest availability information and additional product content details.
TBD: The Pb-Free/Green conversion plan has not been defined.
Pb-Free (RoHS): TI's terms "Lead-Free" or "Pb-Free" mean semiconductor products that are compatible with the current RoHS requirements for all 6 substances, including the requirement that lead not exceed 0.1% by weight in homogeneous materials. Where designed to be soldered at high temperatures, TI Pb-Free products are suitable for use in specified lead-free processes.
Pb-Free (RoHS Exempt): This component has a RoHS exemption for either 1) lead-based flip-chip solder bumps used between the die and package, or 2) lead-based die adhesive used between the die and leadframe. The component is otherwise considered Pb-Free (RoHS compatible) as defined above.
Green (RoHS & no Sb/Br): TI defines "Green" to mean Pb-Free (RoHS compatible), and free of Bromine (Br) and Antimony (Sb) based flame retardants (Br or Sb do not exceed 0.1% by weight in homogeneous material)

(3) MSL, Peak Temp. - The Moisture Sensitivity Level rating according to the JEDEC industry standard classifications, and peak solder temperature.

(4) There may be additional marking, which relates to the logo, the lot trace code information, or the environmental category on the device.

(5) Multiple Device Markings will be inside parentheses. Only one Device Marking contained in parentheses and separated by a "~" will appear on a device. If a line is indented then it is a continuation of the previous line and the two combined represent the entire Device Marking for that device.

(6) Lead/Ball Finish - Orderable Devices may have multiple material finish options. Finish options are separated by a vertical ruled line. Lead/Ball Finish values may wrap to two lines if the finish value exceeds the maximum column width.

Important Information and Disclaimer: The information provided on this page represents TI's knowledge and belief as of the date that it is provided. TI bases its knowledge and belief on information provided by third parties, and makes no representation or warranty as to the accuracy of such information. Efforts are underway to better integrate information from third parties. TI has taken and continues to take reasonable steps to provide representative and accurate information but may not have conducted destructive testing or chemical analysis on incoming materials and chemicals. TI and TI suppliers consider certain information to be proprietary, and thus CAS numbers and other limited information may not be available for release.

In no event shall TI's liability arising out of such information exceed the total purchase price of the TI part(s) at issue in this document sold by TI to Customer on an annual basis.

TAPE AND REEL INFORMATION

REEL DIMENSIONS

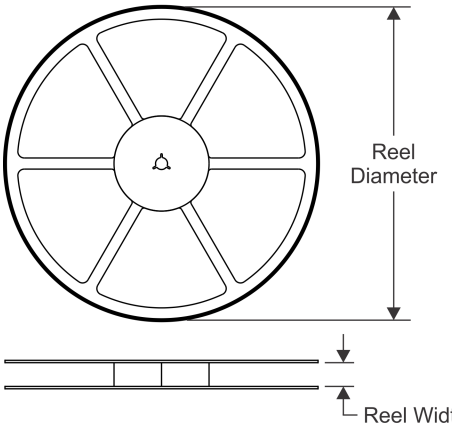

TAPE DIMENSIONS

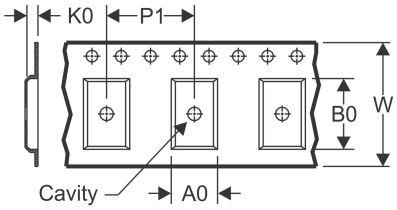

A0	Dimension designed to accommodate the component width
B0	Dimension designed to accommodate the component length
K0	Dimension designed to accommodate the component thickness
W	Overall width of the carrier tape
P1	Pitch between successive cavity centers

QUADRANT ASSIGNMENTS FOR PIN 1 ORIENTATION IN TAPE

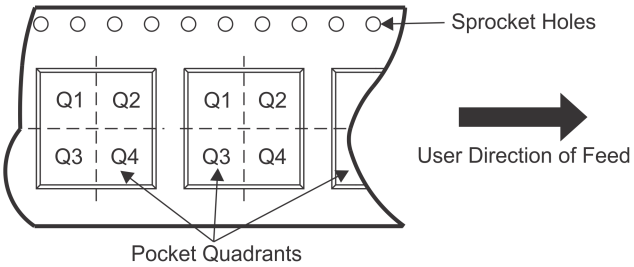

*All dimensions are nominal

Device	Package Type	Package Drawing	Pins	SPQ	Reel Diameter (mm)	Reel Width W1 (mm)	A0 (mm)	B0 (mm)	K0 (mm)	P1 (mm)	W (mm)	Pin1 Quadrant
LP5523TM/NOPB	DSBGA	YFQ	25	250	178.0	8.4	2.43	2.48	0.75	4.0	8.0	Q1
LP5523TMX/NOPB	DSBGA	YFQ	25	3000	178.0	8.4	2.43	2.48	0.75	4.0	8.0	Q1

TAPE AND REEL BOX DIMENSIONS

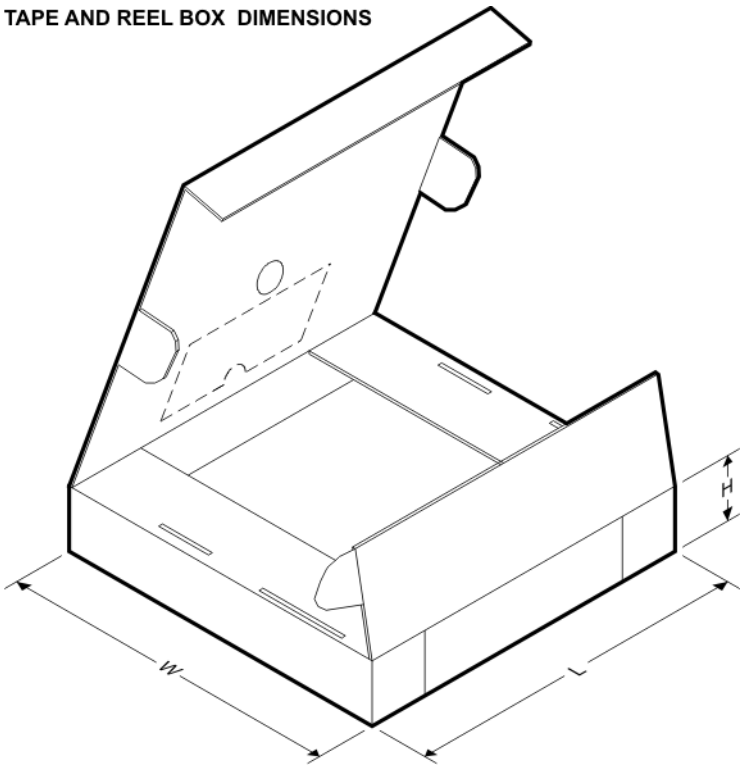

*All dimensions are nominal

Device	Package Type	Package Drawing	Pins	SPQ	Length (mm)	Width (mm)	Height (mm)
LP5523TM/NOPB	DSBGA	YFQ	25	250	210.0	185.0	35.0
LP5523TMX/NOPB	DSBGA	YFQ	25	3000	210.0	185.0	35.0

YFQ0025

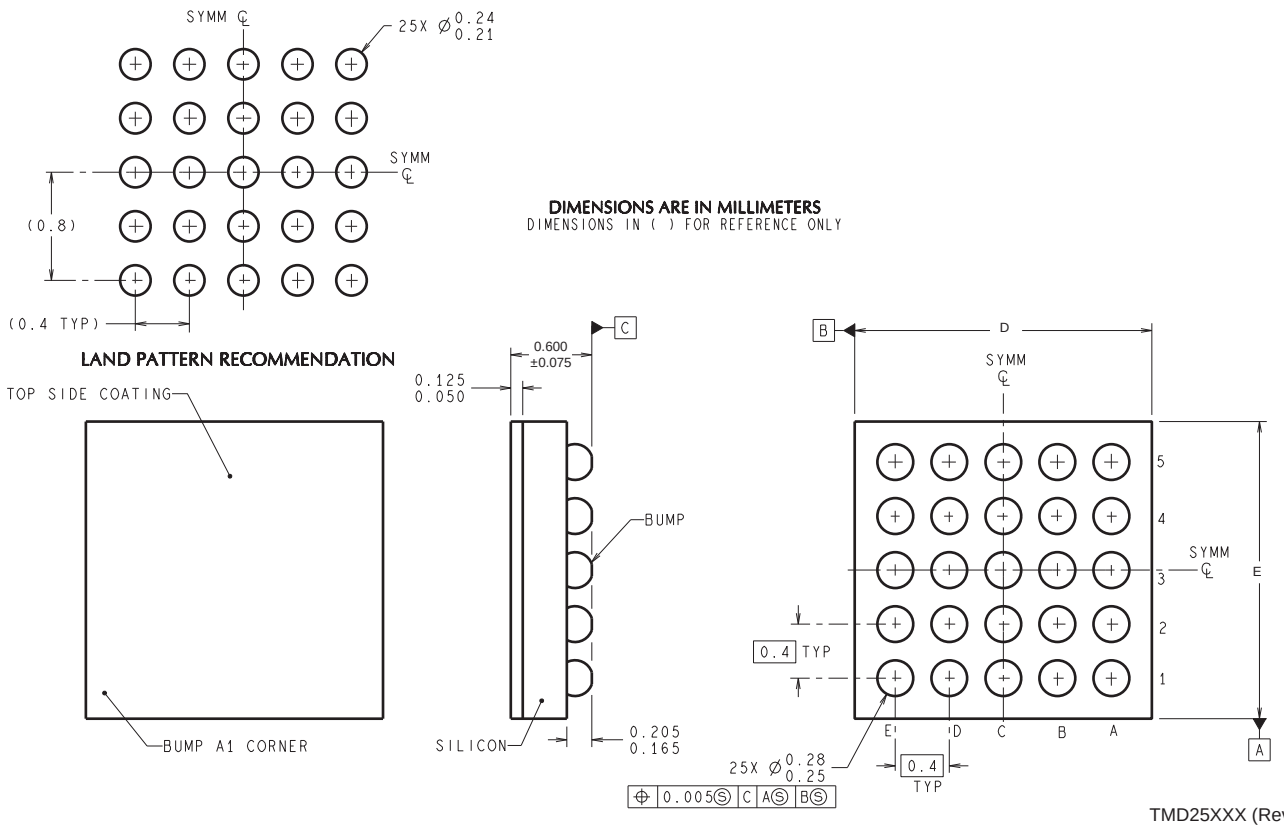

D: Max = 2.29 mm, Min = 2.23 mm

E: Max = 2.29 mm, Min = 2.23 mm

4215084/A 12/12

NOTES: A. All linear dimensions are in millimeters. Dimensioning and tolerancing per ASME Y14.5M-1994.
B. This drawing is subject to change without notice.

IMPORTANT NOTICE

Texas Instruments Incorporated and its subsidiaries (TI) reserve the right to make corrections, enhancements, improvements and other changes to its semiconductor products and services per JESD46, latest issue, and to discontinue any product or service per JESD48, latest issue. Buyers should obtain the latest relevant information before placing orders and should verify that such information is current and complete. All semiconductor products (also referred to herein as “components”) are sold subject to TI’s terms and conditions of sale supplied at the time of order acknowledgment.

TI warrants performance of its components to the specifications applicable at the time of sale, in accordance with the warranty in TI’s terms and conditions of sale of semiconductor products. Testing and other quality control techniques are used to the extent TI deems necessary to support this warranty. Except where mandated by applicable law, testing of all parameters of each component is not necessarily performed.

TI assumes no liability for applications assistance or the design of Buyers’ products. Buyers are responsible for their products and applications using TI components. To minimize the risks associated with Buyers’ products and applications, Buyers should provide adequate design and operating safeguards.

TI does not warrant or represent that any license, either express or implied, is granted under any patent right, copyright, mask work right, or other intellectual property right relating to any combination, machine, or process in which TI components or services are used. Information published by TI regarding third-party products or services does not constitute a license to use such products or services or a warranty or endorsement thereof. Use of such information may require a license from a third party under the patents or other intellectual property of the third party, or a license from TI under the patents or other intellectual property of TI.

Reproduction of significant portions of TI information in TI data books or data sheets is permissible only if reproduction is without alteration and is accompanied by all associated warranties, conditions, limitations, and notices. TI is not responsible or liable for such altered documentation. Information of third parties may be subject to additional restrictions.

Resale of TI components or services with statements different from or beyond the parameters stated by TI for that component or service voids all express and any implied warranties for the associated TI component or service and is an unfair and deceptive business practice. TI is not responsible or liable for any such statements.

Buyer acknowledges and agrees that it is solely responsible for compliance with all legal, regulatory and safety-related requirements concerning its products, and any use of TI components in its applications, notwithstanding any applications-related information or support that may be provided by TI. Buyer represents and agrees that it has all the necessary expertise to create and implement safeguards which anticipate dangerous consequences of failures, monitor failures and their consequences, lessen the likelihood of failures that might cause harm and take appropriate remedial actions. Buyer will fully indemnify TI and its representatives against any damages arising out of the use of any TI components in safety-critical applications.

In some cases, TI components may be promoted specifically to facilitate safety-related applications. With such components, TI’s goal is to help enable customers to design and create their own end-product solutions that meet applicable functional safety standards and requirements. Nonetheless, such components are subject to these terms.

No TI components are authorized for use in FDA Class III (or similar life-critical medical equipment) unless authorized officers of the parties have executed a special agreement specifically governing such use.

Only those TI components which TI has specifically designated as military grade or “enhanced plastic” are designed and intended for use in military/aerospace applications or environments. Buyer acknowledges and agrees that any military or aerospace use of TI components which have ***not*** been so designated is solely at the Buyer's risk, and that Buyer is solely responsible for compliance with all legal and regulatory requirements in connection with such use.

TI has specifically designated certain components as meeting ISO/TS16949 requirements, mainly for automotive use. In any case of use of non-designated products, TI will not be responsible for any failure to meet ISO/TS16949.

Products		**Applications**	
Audio	www.ti.com/audio	Automotive and Transportation	www.ti.com/automotive
Amplifiers	amplifier.ti.com	Communications and Telecom	www.ti.com/communications
Data Converters	dataconverter.ti.com	Computers and Peripherals	www.ti.com/computers
DLP® Products	www.dlp.com	Consumer Electronics	www.ti.com/consumer-apps
DSP	dsp.ti.com	Energy and Lighting	www.ti.com/energy
Clocks and Timers	www.ti.com/clocks	Industrial	www.ti.com/industrial
Interface	interface.ti.com	Medical	www.ti.com/medical
Logic	logic.ti.com	Security	www.ti.com/security
Power Mgmt	power.ti.com	Space, Avionics and Defense	www.ti.com/space-avionics-defense
Microcontrollers	microcontroller.ti.com	Video and Imaging	www.ti.com/video
RFID	www.ti-rfid.com		
OMAP Applications Processors	www.ti.com/omap	**TI E2E Community**	e2e.ti.com
Wireless Connectivity	www.ti.com/wirelessconnectivity		

Mailing Address: Texas Instruments, Post Office Box 655303, Dallas, Texas 75265
Copyright © 2016, Texas Instruments Incorporated