HAOYU

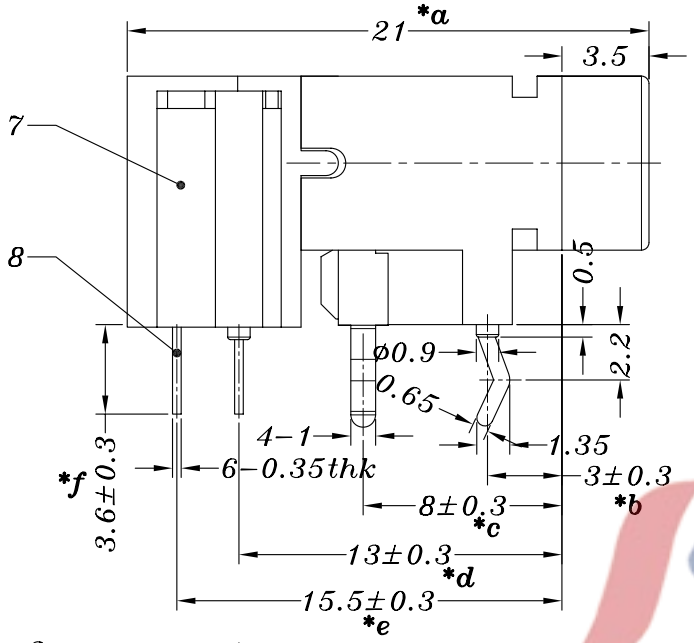

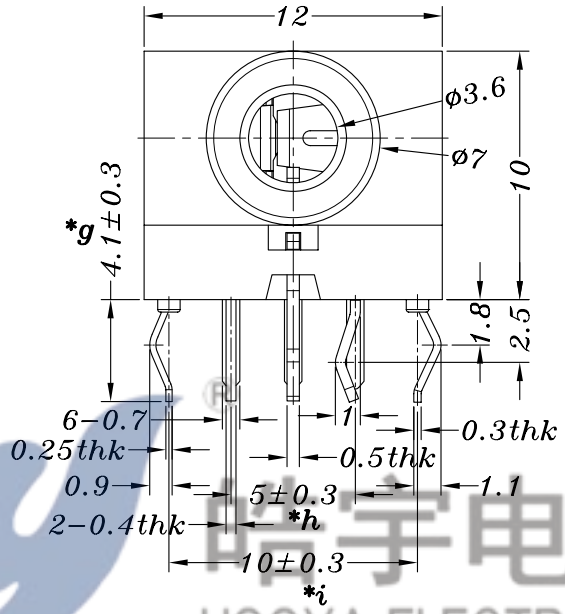

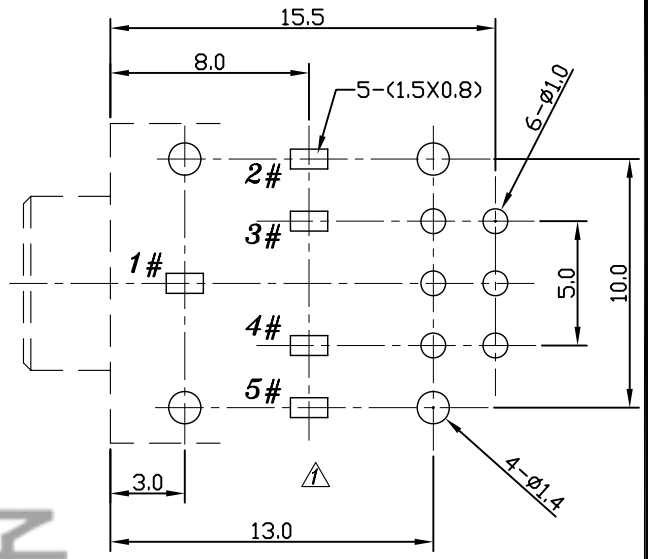

P.C.B LAYOUT
TOP VIEW

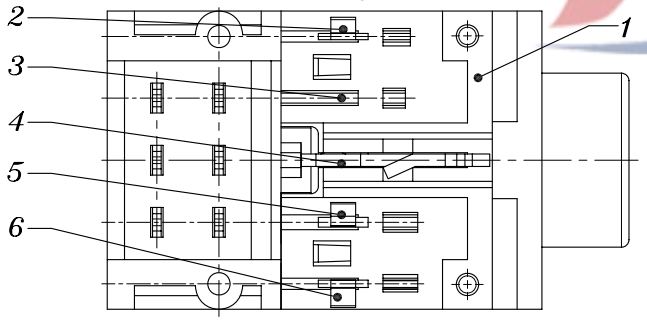

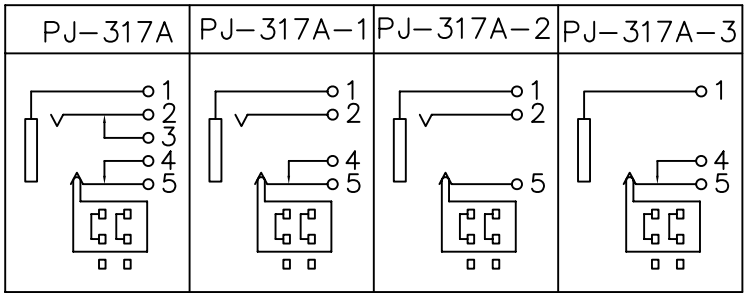

SCHEMATIC

皓宇电子
HOOYA ELECTRONICS

NO.	PART NAME	MATERIAL	QTY	FINISHING
12	PJ317A SPRING	SUS	1	WASHING
11	PJ317A CONTACT CLIP	PBS	2	Ag CLAD
10	PJ317A SLIDER	PBT	1	BLACK
9	PJ317A COVER	PBT	1	BLACK
8	PJ317A TERMINAL	BRASS	2	Ag PLATED
7	PJ317A HOUSING	PBT	1	BLACK
6	PJ317A 5#SPRING	SUS	1	Ag PLATED
5	PJ317 4#FLAT PIECE	BRASS	1	Ag PLATED
4	PJ317 1#FLAT PIECE	BRASS	1	Ag PLATED
3	PJ317 3#FLAT PIECE	BRASS	1	Ag PLATED
2	PJ317 2#SPRING	PBS	1	Ag PLATED
1	PJ317 CASE	PBT	1	BLACK/PINK/GREEN/ORANGE/RED/WHITE

TOLERANCE UNLESS SPECIFIED
UP TO 5mm: ±0.1
ABOVE 5mm: ±0.2
ANGULAR ±1°

NO	DATE	REVISIONS	BY	APPD
A1	2020.05.14	更新PCB板开孔图，线路图	GYW	
A0	2014.10.27	初 版	LIU	

TITLE:PHONE JACK
MODEL:PJ-317A
UNIT : MM
SCALE: 3:1
ROHS COMPLIANT
DWN
CHK'D
APPD
PRO.AGL:
REV :A1

HAOYU(HONGKONG)LIMITED
皓 宇(香 港)有 限 公 司