CAMBION â

Technical Data Sheet

Wearnes Cambion LTD
Castleton, Hope Valley, Derbyshire, S33 8WR, England
Telephone: +44(0)1433 621555 Fax: +44(0)1433 621290
Web: www.cambion.com Email: enquiries@cambion.com

460-3221 Swage mount, .044 (1,14) diameter pin

Recommended mounting hole .064 (1,63) ± .002 (0,05)

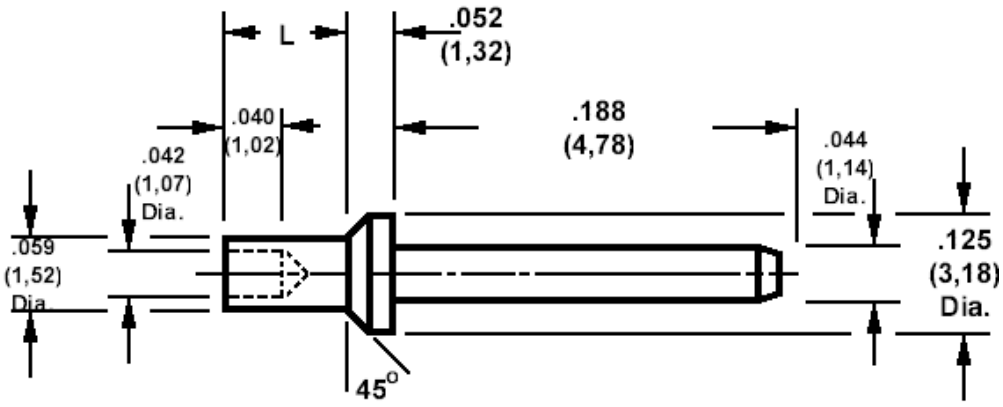

How to order code

460-3221-XX-YY-00

Basic Part No XX = L dimension, YY = Plating Finish

DIMENSIONS (XX)			
Basic Part Number	**(XX)**	**L**	**For Board Thickness**
460-3221	-01	.051 (1,30)	.031 (0,79)
	-02	.094 (2,39)	.061 (1,57)
	-03	.125 (3,18)	.094 (2,39)
	-04	.155 (3,96)	.125 (3,18)

MATERIALS				
Component	**Material**	**Finish (-03)**	**Finish (-04)**	**Finish (-05)**
Pin	Brass	Gold over Nickel	Electro-tin	Electro Solder

SWAGE TOOLING	
Recommended Swaging Tools:-	
Anvil	435-6430-01-00-00
Punch	435-6657-01-00-00

Copyright© Cambion® Thursday, 13 February 2003