3.3-V 10Base-T/100Base-TX Integrated PHYceiver™

General

The ICS1893BF is a low-power, physical-layer device (PHY) that supports the ISO/IEC 10Base-T and 100Base-TX Carrier-Sense Multiple Access/Collision Detection (CSMA/CD) Ethernet standards, ISO/IEC 8802-3.

The ICS1893BF is intended for MII, Node applications that require the Auto-MDIX feature that automatically corrects crossover errors in plant wiring.

The ICS1893BF incorporates Digital-Signal Processing (DSP) control in its Physical-Medium Dependent (PMD) sub layer. As a result, it can transmit and receive data on unshielded twisted-pair (UTP) category 5 cables with attenuation in excess of 24 dB at 100MHz. With this ICS-patented technology, the ICS1893BF can virtually eliminate errors from killer packets.

The ICS1893BF provides a Serial-Management Interface for exchanging command and status information with a Station-Management (STA) entity. The ICS1893BF Media-Dependent Interface (MDI) can be configured to provide either half- or full-duplex operation at data rates of 10 Mb/s or 100Mb/s.

The ICS1893BF is available in a 300-mil 48-lead SSOP package. The ICS1893BF shares the same proven performance circuitry with the ICS1893AF but is not a pin-for-pin replacement of the 1893AF. An application note for a dual footprint layout to accommodate ICS1893AF or ICS1893BF is available on the ICS website.

Applications: NIC cards, PC motherboards, switches, routers, DSL and cable modems, game machines, printers.

Features

- Supports category 5 cables with attenuation in excess of 24dB at 100 MHz.
- Single-chip, fully integrated PHY provides PCS, PMA, PMD, and AUTONEG sub layers functions of IEEE standard.
- 10Base-T and 100Base-TX IEEE 8802.3 compliant
- Single 3.3V power supply
- Highly configurable, supports:
  - Media Independent Interface (MII)
  - Auto-Negotiation with Parallel detection
  - Node applications, managed or unmanaged
  - 10M or 100M full and half-duplex modes
  - Loopback mode for Diagnostic Functions
  - Auto-MDI/MDIX crossover correction
- Low-power CMOS (typically 400 mW)
- Power-Down mode typically 21mW
- Clock and crystal supported
- Fully integrated, DSP-based PMD includes:
  - Adaptive equalization and baseline-wander correction
  - Transmit wave shaping and stream cipher scrambler
  - MLT-3 encoder and NRZ/NRZI encoder
- Small footprint 48-pin 300 mil. SSOP package
- Also available in small footprint 56-pin 8x8 MLF2 package
- Available in Industrial Temp and Lead Free

NOTE: EOL for non-green parts to occur on 5/13/10 per PDN U-09-01

ICS1893BF Block Diagram

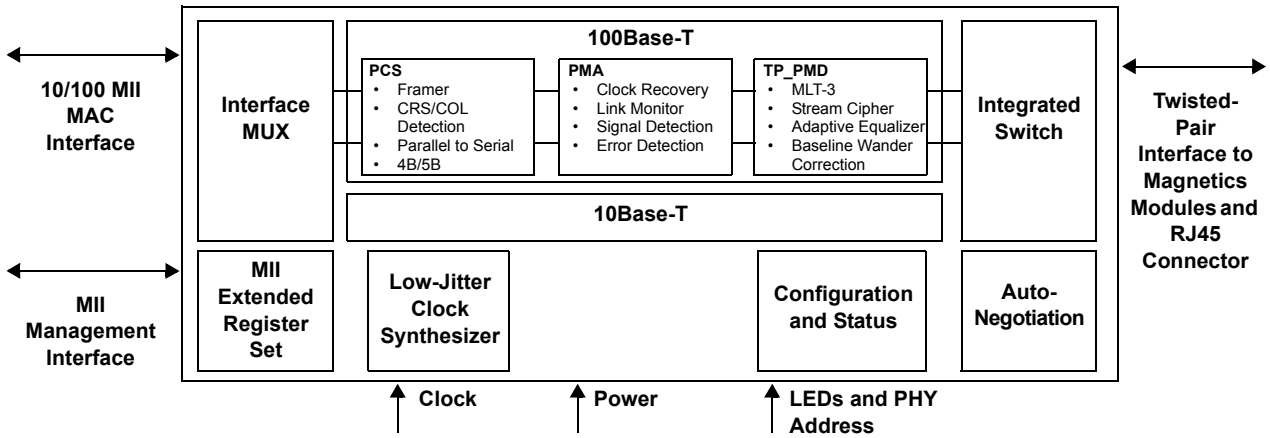

IDT reserves the right to make changes in the device data identified in this publication without further notice. IDT advises its customers to obtain the latest version of all device data to verify that any information being relied upon by the customer is current and accurate.

Table of Contents

Section	Title	Page
Chapter 1	**Abbreviations and Acronyms**	**10**
Chapter 2	**Conventions and Nomenclature**	**12**
Chapter 3	**Overview of the ICS1893BF**	**14**
3.1	100Base-TX Operation	15
3.2	10Base-T Operation	15
Chapter 4	**Operating Modes Overview**	**16**
4.1	Reset Operations	17
4.1.1	General Reset Operations	17
4.1.2	Specific Reset Operations	18
4.2	Power-Down Operations	19
4.3	Automatic Power-Saving Operations	20
4.4	Auto-Negotiation Operations	20
4.5	100Base-TX Operations	21
4.6	10Base-T Operations	21
4.7	Half-Duplex and Full-Duplex Operations	21
4.8	Auto-MDI/MDIX Crossover	22
Chapter 5	**Interface Overviews**	**23**
5.1	MII Data Interface	24
5.2	Serial Management Interface	25
5.3	Twisted-Pair Interface	25
5.3.1	Twisted-Pair Transmitter	25
5.4	Clock Reference Interface	27
5.5	Status Interface	29
Chapter 6	**Functional Blocks**	**31**
6.1	Functional Block: Media Independent Interface	32
6.2	Functional Block: Auto-Negotiation	33
6.2.1	Auto-Negotiation General Process	33
6.2.2	Auto-Negotiation: Parallel Detection	34
6.2.3	Auto-Negotiation: Remote Fault Signaling	35
6.2.4	Auto-Negotiation: Reset and Restart	35
6.2.5	Auto-Negotiation: Progress Monitor	36

Copyright © 2009, IDT, Inc.
All rights reserved.

Table of Contents

Section	Title	Page
6.3	Functional Block: 100Base-X PCS and PMA Sublayers	36
6.3.1	PCS Sublayer	36
6.3.2	PMA Sublayer	36
6.3.3	PCS/PMA Transmit Modules	37
6.3.4	PCS/PMA Receive Modules	37
6.3.5	PCS Control Signal Generation	38
6.3.6	4B/5B Encoding/Decoding	39
6.4	Functional Block: 100Base-TX TP-PMD Operations	39
6.4.1	100Base-TX Operation: Stream Cipher Scrambler/Descrambler	39
6.4.2	100Base-TX Operation: MLT-3 Encoder/Decoder	40
6.4.3	100Base-TX Operation: DC Restoration	40
6.4.4	100Base-TX Operation: Adaptive Equalizer	40
6.4.5	100Base-TX Operation: Twisted-Pair Transmitter	40
6.4.6	100Base-TX Operation: Twisted-Pair Receiver	41
6.4.7	100Base-TX Operation: Isolation Transformer	41
6.5	Functional Block: 10Base-T Operations	41
6.5.1	10Base-T Operation: Manchester Encoder/Decoder	41
6.5.2	10Base-T Operation: Clock Synthesis	42
6.5.3	10Base-T Operation: Clock Recovery	42
6.5.4	10Base-T Operation: Idle	42
6.5.5	10Base-T Operation: Link Monitor	42
6.5.6	10Base-T Operation: Smart Squelch	43
6.5.7	10Base-T Operation: Carrier Detection	44
6.5.8	10Base-T Operation: Collision Detection	44
6.5.9	10Base-T Operation: Jabber	44
6.5.10	10Base-T Operation: SQE Test	44
6.5.11	10Base-T Operation: Twisted-Pair Transmitter	45
6.5.12	10Base-T Operation: Twisted-Pair Receiver	45
6.5.13	10Base-T Operation: Auto Polarity Correction	45
6.5.14	10Base-T Operation: Isolation Transformer	46
6.6	Functional Block: Management Interface	46
6.6.1	Management Register Set Summary	46
6.6.2	Management Frame Structure	46

Copyright © 2009, IDT, Inc.
All rights reserved.

Table of Contents

Section	Title	Page
Chapter 7	**Management Register Set**	**49**
7.1	Introduction to Management Register Set	50
7.1.1	Management Register Set Outline	50
7.1.2	Management Register Bit Access	51
7.1.3	Management Register Bit Default Values	51
7.1.4	Management Register Bit Special Functions	52
7.2	Register 0: Control Register	53
7.2.1	Reset (bit 0.15)	53
7.2.2	Loopback Enable (bit 0.14)	54
7.2.3	Data Rate Select (bit 0.13)	54
7.2.4	Auto-Negotiation Enable (bit 0.12)	54
7.2.5	Low Power Mode (bit 0.11)	55
7.2.6	Isolate (bit 0.10)	55
7.2.7	Restart Auto-Negotiation (bit 0.9)	55
7.2.8	Duplex Mode (bit 0.8)	56
7.2.9	Collision Test (bit 0.7)	56
7.2.10	IEEE Reserved Bits (bits 0.6:0)	56
7.3	Register 1: Status Register	57
7.3.1	100Base-T4 (bit 1.15)	57
7.3.2	100Base-TX Full Duplex (bit 1.14)	58
7.3.3	100Base-TX Half Duplex (bit 1.13)	58
7.3.4	10Base-T Full Duplex (bit 1.12)	58
7.3.5	10Base-T Half Duplex (bit 1.11)	58
7.3.6	IEEE Reserved Bits (bits 1.10:7)	59
7.3.7	MF Preamble Suppression (bit 1.6)	59
7.3.8	Auto-Negotiation Complete (bit 1.5)	59
7.3.9	Remote Fault (bit 1.4)	60
7.3.10	Auto-Negotiation Ability (bit 1.3)	60
7.3.11	Link Status (bit 1.2)	60
7.3.12	Jabber Detect (bit 1.1)	61
7.3.13	Extended Capability (bit 1.0)	61
7.4	Register 2: PHY Identifier Register	62

Copyright © 2009, IDT, Inc.
All rights reserved.

Table of Contents

Section	Title	Page
7.5	Register 3: PHY Identifier Register	63
7.5.1	OUI bits 19-24 (bits 3.15:10)	63
7.5.2	Manufacturer's Model Number (bits 3.9:4)	63
7.5.3	Revision Number (bits 3.3:0)	63
7.6	Register 4: Auto-Negotiation Register	65
7.6.1	Next Page (bit 4.15)	65
7.6.2	IEEE Reserved Bit (bit 4.14)	66
7.6.3	Remote Fault (bit 4.13)	66
7.6.4	IEEE Reserved Bits (bits 4.12:10)	66
7.6.5	Technology Ability Field (bits 4.9:5)	67
7.6.6	Selector Field (Bits 4.4:0)	67
7.7	Register 5: Auto-Negotiation Link Partner Ability Register	68
7.7.1	Next Page (bit 5.15)	68
7.7.2	Acknowledge (bit 5.14)	69
7.7.3	Remote Fault (bit 5.13)	69
7.7.4	Technology Ability Field (bits 5.12:5)	69
7.7.5	Selector Field (bits 5.4:0)	69
7.8	Register 6: Auto-Negotiation Expansion Register	70
7.8.1	IEEE Reserved Bits (bits 6.15:5)	70
7.8.2	Parallel Detection Fault (bit 6.4)	71
7.8.3	Link Partner Next Page Able (bit 6.3)	71
7.8.4	Next Page Able (bit 6.2)	71
7.8.5	Page Received (bit 6.1)	71
7.8.6	Link Partner Auto-Negotiation Able (bit 6.0)	71
7.9	Register 7: Auto-Negotiation Next Page Transmit Register	72
7.9.1	Next Page (bit 7.15)	73
7.9.2	IEEE Reserved Bit (bit 7.14)	73
7.9.3	Message Page (bit 7.13)	73
7.9.4	Acknowledge 2 (bit 7.12)	73
7.9.5	Toggle (bit 7.11)	73
7.9.6	Message Code Field / Unformatted Code Field (bits 7.10:0)	73
7.10	Register 8: Auto-Negotiation Next Page Link Partner Ability Register	74
7.10.1	Next Page (bit 8.15)	75
7.10.2	IEEE Reserved Bit (bit 8.14)	75
7.10.3	Message Page (bit 8.13)	75
7.10.4	Acknowledge 2 (bit 8.12)	75
7.10.5	Message Code Field / Unformatted Code Field (bits 8.10:0)	75

Copyright © 2009, IDT, Inc.
All rights reserved.

Table of Contents

Section	Title	Page
7.11	Register 16: Extended Control Register	76
7.11.1	Command Override Write Enable (bit 16.15)	77
7.11.2	ICS Reserved (bits 16.14:11)	77
7.11.3	PHY Address (bits 16.10:6)	77
7.11.4	Stream Cipher Scrambler Test Mode (bit 16.5)	77
7.11.5	ICS Reserved (bit 16.4)	77
7.11.6	NRZ/NRZI Encoding (bit 16.3)	77
7.11.7	Invalid Error Code Test (bit 16.2)	78
7.11.8	ICS Reserved (bit 16.1)	78
7.11.9	Stream Cipher Disable (bit 16.0)	78
7.12	Register 17: Quick Poll Detailed Status Register	79
7.12.1	Data Rate (bit 17.15)	80
7.12.2	Duplex (bit 17.14)	80
7.12.3	Auto-Negotiation Progress Monitor (bits 17.13:11)	80
7.12.4	100Base-TX Receive Signal Lost (bit 17.10)	81
7.12.5	100Base PLL Lock Error (bit 17.9)	81
7.12.6	False Carrier (bit 17.8)	82
7.12.7	Invalid Symbol (bit 17.7)	82
7.12.8	Halt Symbol (bit 17.6)	82
7.12.9	Premature End (bit 17.5)	83
7.12.10	Auto-Negotiation Complete (bit 17.4)	83
7.12.11	100Base-TX Signal Detect (bit 17.3)	83
7.12.12	Jabber Detect (bit 17.2)	83
7.12.13	Remote Fault (bit 17.1)	83
7.12.14	Link Status (bit 17.0)	83
7.13	Register 18: 10Base-T Operations Register	84
7.13.1	Remote Jabber Detect (bit 18.15)	84
7.13.2	Polarity Reversed (bit 18.14)	85
7.13.3	ICS Reserved (bits 18.13:6)	85
7.13.4	Jabber Inhibit (bit 18.5)	85
7.13.5	ICS Reserved (bit 18.4)	85
7.13.6	Auto Polarity Inhibit (bit 18.3)	85
7.13.7	SQE Test Inhibit (bit 18.2)	85
7.13.8	Link Loss Inhibit (bit 18.1)	86
7.13.9	Squelch Inhibit (bit 18.0)	86

Copyright © 2009, IDT, Inc.
All rights reserved.

Table of Contents

Section	Title	Page
7.14	Register 19: Extended Control Register 2	87
7.14.1	Node Configuration (bit 19.15)	88
7.14.2	Hardware/Software Priority Status (bit 19.14)	88
7.14.3	Remote Fault (bit 19.13)	88
7.14.4	ICS Reserved (bits 19.12:10)	88
7.14.5	Auto-MDI/MDIX (bits 19. 9:13)	88
7.14.6	Twisted Pair Tri-State Enable, TPTRI (bit 19.7)	89
7.14.7	ICS Reserved (bits 19.6:1)	89
7.14.8	Automatic 100Base-TX Power-Down (bit 19.0)	89
Chapter 8	**Pin Diagram, Listings, and Descriptions**	**90**
8.1	ICS1893BF Pin Diagram	90
8.2	ICS1893BF Pin Descriptions	91
8.2.1	Transformer Interface Pins	92
8.2.2	Multi-Function (Multiplexed) Pins: PHY Address and LED Pins	92
8.2.3	Configuration Pins	96
8.2.4	MAC Interface Pins	97
8.2.5	Ground and Power Pins	101
8.3	ICS1893BK Pin Diagram with MDIX Pinout (56L, 8x8 MLF2)	102
8.3.1	ICS1893BK Pin Descriptions	103
8.3.2	Transformer Interface Pins	104
8.3.3	Ground and Power Pins	105
Chapter 9	**DC and AC Operating Conditions**	**106**
9.1	Absolute Maximum Ratings	106
9.2	Recommended Operating Conditions	106
9.3	Recommended Component Values	107
9.4	DC Operating Characteristics	108
9.4.1	DC Operating Characteristics for Supply Current	108
9.4.2	DC Operating Characteristics for TTL Inputs and Outputs	108
9.4.3	DC Operating Characteristics for REF_IN	109
9.4.4	DC Operating Characteristics for Media Independent Interface	109
9.5	Timing Diagrams	110
9.5.1	Timing for Clock Reference In (REF_IN) Pin	110
9.5.2	Timing for Transmit Clock (TXCLK) Pins	111
9.5.3	Timing for Receive Clock (RXCLK) Pins	112
9.5.4	100M MII: Synchronous Transmit Timing	113
9.5.5	10M MII: Synchronous Transmit Timing	114
9.5.6	100M/MII Media Independent Interface: Synchronous Receive Timing	115
9.5.7	MII Management Interface Timing	116
9.5.8	10M Media Independent Interface: Receive Latency	117
9.5.9	10M Media Independent Interface: Transmit Latency	118
9.5.10	100M/MII Media Independent Interface: Transmit Latency	119
9.5.11	100M MII: Carrier Assertion/De-Assertion (Half-Duplex Transmission)	120
9.5.12	10M MII: Carrier Assertion/De-Assertion (Half-Duplex Transmission)	121
9.5.13	100M MII Media Independent Interface: Receive Latency	122

Copyright © 2009, IDT, Inc.
All rights reserved.

Table of Contents

Section	Title	Page
9.5.14	100M Media Independent Interface: Input-to-Carrier Assertion/De-Assertion	123
9.5.15	Reset: Power-On Reset	124
9.5.16	Reset: Hardware Reset and Power-Down	125
9.5.17	10Base-T: Heartbeat Timing (SQE)	126
9.5.18	10Base-T: Jabber Timing	127
9.5.19	10Base-T: Normal Link Pulse Timing	128
9.5.20	Auto-Negotiation Fast Link Pulse Timing	129
Chapter 10	**Physical Dimensions of ICS1893BF Package**	**130**
Chapter 11	**Ordering Information**	**132**

Copyright © 2009, IDT, Inc.
All rights reserved.

Revision History

- The initial release of this document, Rev A, is dated October 31, 2003
- Rev. B is dated March 24, 2004. The following list indicates changes made.
  - Page 1. Document status changes from Rev. A to Rev. B. Also, two new bullet items were added to Features column, the first for a new package type, the second that the device is available in industrial temperature and lead-free. Lastly, bullet item “Supports category 5 cables . . .” deleted.
  - Pages 2 through 8, Table of Contents updated to reflect the Rev. B changes.
  - Page 26. The letters “BF” added to ICS1893 in Figure 5-1.
  - Page 27. ICS1893BF device number added, two places in Figure 5-2.
  - Page 28. Table 5-1 revised.
  - Page 83. Table 7-18. Correction made in Bit 17.3 row.
  - Page 92. Tables 8-1, -2, -3. ICS1893BF device number added to table titles, Table 8-2 deleted. Table numbering sequence changed to reflect the deletion.
  - Page 97. ICS1893BF device number added to [now] Table 8-3. New row added to table. Typo corrected in Signal Name column. In addition, ICS1893BF device number added to [now] Table 8-4.
  - Page 99. Table 8-7. Typographical corrections (removed unnecessary commas).
  - Three (3) new pages added after Page 106. New material includes 8.3 ICS1893BK Pin Diagram, Pin Description in Table 8-10 and -11. In addition, paragraphs 8.5 Transformer Interface Pins and 8.6 Ground and Power Pins and related Tables 8-13 and 8-14.
  - Page 111. Industrial Temperature operating conditions added to Table 9-2.
  - Page 135. Figure 10-2 Quad Flat/No Lead Plastic Package physical dimensions added.
  - Page 136. Table 11-1 ICS1893BF ordering information revised to add new package options.
- Rev C is dated September 29, 2005 and the following changes were made:
  - Page 132. Added “T” to the part ordering numbers to designate Tape and Reel packaging.
- Rev D – Added top-side marking.
- Rev E, 08/11/09 – Added “EOL” ordering information note per PDN U-09-01.

Copyright © 2009, IDT, Inc.
All rights reserved.

Chapter 1 Abbreviations and Acronyms

Table 1-1 lists and interprets the abbreviations and acronyms used throughout this data sheet.

Table 1-1. Abbreviations and Acronyms

Abbreviation / Acronym	Interpretation
4B/5B	4-Bit / 5-Bit Encoding/Decoding
ANSI	American National Standards Institute
CMOS	complimentary metal-oxide semiconductor
CSMA/CD	Carrier Sense Multiple Access with Collision Detection
CW	Command Override Write
DSP	digital signal processing
ESD	End-of-Stream Delimiter
FDDI	Fiber Distributed Data Interface
FLL	frequency-locked loop
FLP	Fast Link Pulse
IDL	A ‘dead’ time on the link following a 10Base-T packet, not to be confused with idle
IEC	International Electrotechnical Commission
IEEE	Institute of Electrical and Electronic Engineers
ISO	International Standards Organization
LH	Latching High
LL	Latching Low
LMX	Latching Maximum
MAC	Media Access Control
Max.	maximum
Mbps	Megabits per second
MDI	Media Dependent Interface
MDIX	Media Independent Interface Crossed
MF	Management Frame
MII	Media Independent Interface
Min.	minimum
MLT-3	Multi-Level Transition Encoding (3 Levels)
N/A	Not Applicable
NLP	Normal Link Pulse
No.	Number
NRZ	Not Return to Zero
NRZI	Not Return to Zero, Invert on one

Copyright © 2009, IDT, Inc.
All rights reserved.

Table 1-1. Abbreviations and Acronyms (*Continued*)

Abbreviation / Acronym	Interpretation
OSI	Open Systems Interconnection
OUI	Organizationally Unique Identifier
PCS	Physical Coding sublayer
PHY	physical-layer device The ICS1893BF is a physical-layer device, also referred to as a ‘PHY’ or ‘PHYceiver’. (The ICS1890 is also a physical-layer device.)
PLL	phase-locked loop
PMA	Physical Medium Attachment
PMD	Physical Medium Dependent
ppm	parts per million
RO	read only
R/W	read/write
R/W0	read/write zero
SC	self-clearing
SF	Special Functions
SFD	Start-of-Frame Delimiter
SI	Stream Interface, Serial Interface, or Symbol Interface. With reference to the MII/SI pin, the acronym ‘SI’ has multiple meanings. • Generically, SI means 'Stream Interface', and is documented as such in this data sheet. • However, when the MAC Interface is configured for: – 10M operations, SI is an acronym for 'Serial Interface'. – 100M operations, SI is an acronym for 'Symbol Interface'.
SQE	Signal Quality Error
SSD	Start-of-Stream Delimiter
SSOP	Small Shrink Outline Package
STA	Station Management Entity
STP	shielded twisted pair
TAF	Technology Ability Field
TP-PMD	Twisted-Pair Physical Layer Medium Dependent
Typ.	typical
UTP	unshielded twisted pair

Copyright © 2009, IDT, Inc.
All rights reserved.

Chapter 2 Conventions and Nomenclature

Table 2-1 lists and explains the conventions and nomenclature used throughout this data sheet.

Table 2-1. Conventions and Nomenclature

Item	Convention / Nomenclature
Bits	• A bit in a register is identified using the format 'register.bit'. For example, bit 0.15 is bit 15 of register 0. • When a colon is used with bits, it indicates the range of bits. For example, bits 1.15:11 are bits 15, 14, 13, 12, and 11 of register 1. • For a range of bits, the order is always from the most-significant bit to the least-significant bit.
Code groups	Within this table, see the item 'Symbols'
Colon (:)	Within this table, see these items: • 'Bits' • 'Pin (or signal) names'
Numbers	• As a default, all numbers use the decimal system (that is, base 10) unless followed by a lowercase letter. A string of numbers followed by a lowercase letter: – A 'b' represents a binary (base 2) number – An 'h' represents a hexadecimal (base 16) number – An 'o' represents an octal (base 8) number • All numerical references to registers use decimal notation (and not hexadecimal).
Pin (or signal) names	• All pin or signal names are provided in capital letters. • A pin name that includes a forward slash '/' is a multi-function, configuration pin. These pins provide the ability to select between two ICS1893BF functions. The name provided: – Before the '/' indicates the pin name and function when the signal level on the pin is logic zero. – After the '/' indicates the pin name and function when the signal level on the pin is logic one. For example, the HW/SW pin selects between Hardware (HW) mode and Software (SW) mode. When the signal level on the HW/SW pin is logic: – Zero, the ICS1893BF Hardware mode is selected. – One, the ICS1893BF Software mode is selected. • An 'n' appended to the end of a pin name or signal name (such as RESETn) indicates an active-low operation. • When a colon is used with pin or signal names, it indicates a range. For example, TXD[3:0] represents pins/signals TXD3, TXD2, TXD1, and TXD0. • When pin name abbreviations are spelled out, words in parentheses indicate additional description that is not part of the pin name abbreviation.
Registers	• A bit in a register is identified using the format 'register.bit'. For example, bit 0.15 is bit 15 of register 0. • All numerical references to registers use decimal notation (and not hexadecimal). • When register name abbreviations are spelled out, words in parentheses indicate additional description that is not part of the register name abbreviation.

Copyright © 2009, IDT, Inc.
All rights reserved.

Table 2-1. Conventions and Nomenclature (*Continued*)

Item	Convention / Nomenclature
Signal references	• When referring to signals, the terms: – 'FALSE', 'low', or 'zero' represent signals that are logic zero. – 'TRUE', 'high', or 'one' represent signals that are logic one. • Chapter 9, "DC and AC Operating Conditions" defines the electrical specifications for 'logic zero' and 'logic one' signals.
Symbols	• In this data sheet, code group names are referred to as 'symbols' and they are shown between '/' (slashes). For example, the symbol /J/ represents the first half of the Start-of-Stream Delimiter (SSD1). • Symbol sequences are shown in succession. For example, /I/J/K/ represents an IDLE followed by the SSD.
Terms: 'set', 'active', 'asserted',	The terms 'set', 'active', and 'asserted' are synonymous. They do not necessarily infer logic one. (For example, an active-low signal can be set to logic zero.)
Terms: 'cleared', 'de-asserted', 'inactive'	The terms 'cleared', 'inactive', and 'de-asserted' are synonymous. They do not necessarily infer logic zero.
Terms: 'twisted-pair receiver'	In reference to the ICS1893BF, the term 'Twisted-Pair Receiver' refers to the set of Twisted-Pair Receive output pins (TP_RXP and TP_RXN).
Terms: 'twisted-pair transmitter'	In reference to the ICS1893BF, the term 'Twisted-Pair Transmitter' refers to the set of Twisted-Pair Transmit output pins (TP_TXP and TP_TXN).

Copyright © 2009, IDT, Inc.
All rights reserved.

Chapter 3 Overview of the ICS1893BF

The ICS1893BF is a stream processor. During data transmission, it accepts sequential nibbles from its MAC (Media Access Control) converts them into a serial bit stream, encodes them, and transmits them over the medium through an external isolation transformer. When receiving data, the ICS1893BF converts and decodes a serial bit stream (acquired from an isolation transformer that interfaces with the medium) into sequential nibbles. It subsequently presents these nibbles to its MAC Interface.

The ICS1893BF implements the OSI model's physical layer, consisting of the following, as defined by the ISO/IEC 8802-3 standard:

- Physical Coding sublayer (PCS)
- Physical Medium Attachment sublayer (PMA)
- Physical Medium Dependent sublayer (PMD)
- Auto-Negotiation sublayer

The ICS1893BF is transparent to the next layer of the OSI model, the link layer. The link layer has two sublayers: the Logical Link Control sublayer and the MAC sublayer. The ICS1893BF can interface directly to the MAC.

The ICS1893BF transmits framed packets acquired from its MAC Interface and receives encapsulated packets from another PHY, which it translates and presents to its MAC Interface.

Note: As per the ISO/IEC standard, the ICS1893BF does not affect, nor is it affected by, the underlying structure of the MAC frame it is conveying.

Copyright © 2009, IDT, Inc.
All rights reserved.

3.1 100Base-TX Operation

During 100Base-TX data transmission, the ICS1893BF accepts packets from a MAC and inserts Start-of-Stream Delimiters (SSDs) and End-of-Stream Delimiters (ESDs) into the data stream. The ICS1893BF encapsulates each MAC frame, including the preamble, with an SSD and an ESD. As per the ISO/IEC Standard, the ICS1893BF replaces the first octet of each MAC preamble with an SSD and appends an ESD to the end of each MAC frame.

When receiving data from the medium, the ICS1893BF removes each SSD and replaces it with the pre-defined preamble pattern before presenting the nibbles to its MAC Interface. When the ICS1893BF encounters an ESD in the received data stream, signifying the end of the frame, it ends the presentation of nibbles to its MAC Interface. Therefore, the local MAC receives an unaltered copy of the transmitted frame sent by the remote MAC.

During periods when MAC frames are being neither transmitted nor received, the ICS1893BF signals and detects the IDLE condition on the Link Segment. In the 100Base-TX mode, the ICS1893BF transmit channel sends a continuous stream of scrambled ones to signify the IDLE condition. Similarly, the ICS1893BF receive channel continually monitors its data stream and looks for a pattern of scrambled ones. The results of this signaling and monitoring provide the ICS1893BF with the means to establish the integrity of the Link Segment between itself and its remote link partner and inform its Station Management Entity (STA) of the link status.

For 100M data transmission, the ICS1893BF MAC Interface is configured to provide a 100M Media Independent Interface (MII).

3.2 10Base-T Operation

During 10Base-T data transmission, the ICS1893BF inserts only the IDL delimiter into the data stream. The ICS1893BF appends the IDL delimiter to the end of each MAC frame. However, since the 10Base-T preamble already has a Start-of-Frame delimiter (SFD), it is not required that the ICS1893BF insert an SSD-like delimiter.

When receiving data from the medium (such as a twisted-pair cable), the ICS1893BF uses the preamble to synchronize its receive clock. When the ICS1893BF receive clock establishes lock, it presents the preamble nibbles to its MAC Interface. The 10M MAC Interface uses the standard MII Interface.

In 10M operations, during periods when MAC frames are being neither transmitted nor received, the ICS1893BF signals and detects Normal Link Pulses. This action allows the integrity of the Link Segment with the remote link partner to be established and then reported to the ICS1893BF's STA.

Copyright © 2009, IDT, Inc.
All rights reserved.

Chapter 4 Operating Modes Overview

The ICS1893BF operating modes are typically controlled from software.

The ICS1893BF register bits are accessible through a standard MII (Media Independent Interface) Serial Management Port.

The ICS1893BF is configured to support the MAC Interface as a 10M MII or a 100M MII. The protocol on the Medium Dependent Interface (MDI) can be configured to support either 10M or 100M operations in either half-duplex or full-duplex modes.

The ICS1893BF is fully compliant with the ISO/IEC 8802-3 standard, as it pertains to both 10Base-T and 100Base-TX operations. The feature-rich ICS1893BF allows easy migration from 10-Mbps to 100-Mbps operations as well as from systems that require support of both 10M and 100M links.

This chapter is an overview of the following ICS1893BF modes of operation:

- Section 4.1, “Reset Operations”
- Section 4.2, “Power-Down Operations”
- Section 4.3, “Automatic Power-Saving Operations”
- Section 4.4, “Auto-Negotiation Operations”
- Section 4.5, “100Base-TX Operations”
- Section 4.6, “10Base-T Operations”
- Section 4.7, “Half-Duplex and Full-Duplex Operations”
- Section 4.8, “Auto-MDI/MDIX Crossover”

Copyright © 2009, IDT, Inc.
All rights reserved.

4.1 Reset Operations

This section first discusses reset operations in general and then specific ways in which the ICS1893BF can be configured for various reset options.

4.1.1 General Reset Operations

The following reset operations apply to all the specific ways in which the ICS1893BF can be reset, which are discussed in Section 4.1.2, “Specific Reset Operations”.

4.1.1.1 Entering Reset

When the ICS1893BF enters a reset condition (either through hardware, power-on reset, or software), it does the following:

1. Isolates the MAC Interface input pins
2. Drives all MAC Interface output pins low
3. Tri-states the signals on its Twisted-Pair Transmit pins (TP_TXP and TP_TXN)
4. Initializes all its internal modules and state machines to their default states
5. Enters the power-down state
6. Initializes all internal latching low (LL), latching high (LH), and latching maximum (LMX) Management Register bits to their default values

4.1.1.2 Exiting Reset

When the ICS1893BF exits a reset condition, it does the following:

1. Exits the power-down state
2. Latches the Serial Management Port Address of the ICS1893BF into the Extended Control Register, bits 16.10:6. [See Section 7.11.3, “PHY Address (bits 16.10:6)”.]
3. Enables all its internal modules and state machines
4. Sets all Management Register bits to their default values
5. Enables the Twisted-Pair Transmit pins (TP_TXP and TP_TXN)
6. Resynchronizes both its Transmit and Receive Phase-Locked Loops, which provide its transmit clock (TXCLK) and receive clock (RXCLK)
7. Releases all MAC Interface pins, which takes a maximum of 640 ns after the reset condition is removed

4.1.1.3 Hot Insertion

As with the ICS189X products, the ICS1893BF reset design supports ‘hot insertion’ of its MII. (That is, the ICS1893BF can connect its MAC Interface to a MAC while power is already applied to the MAC.)

Copyright © 2009, IDT, Inc.
All rights reserved.

4.1.2 Specific Reset Operations

This section discusses the following specific ways that the ICS1893BF can be reset:

- Hardware reset (using the RESETn pin)
- Power-on reset (applying power to the ICS1893BF)
- Software reset (using Control Register bit 0.15)

Note: At the completion of a reset (either hardware, power-on, or software), the ICS1893BF sets all registers to their default values.

4.1.2.1 Hardware Reset

Entering Hardware Reset

Holding the active-low RESETn pin low for a minimum of five REF_IN clock cycles initiates a hardware reset (that is, the ICS1893BF enters the reset state). During reset, the ICS1893BF executes the steps listed in Section 4.1.1.1, “Entering Reset”.

Exiting Hardware Reset

After the signal on the RESETn pin transitions from a low to a high state, the ICS1893BF completes in 640 ns (that is, in 16 REF_IN clocks) steps 1 through 5, listed in Section 4.1.1.2, “Exiting Reset”. After the first five steps are completed, the Serial Management Port is ready for normal operations, but this action does not signify the end of the reset cycle. The reset cycle completes when the transmit clock (TXCLK) and receive clock (RXCLK) are available, which is typically 53 ms after the RESETn pin goes high. [For details on this transition, see Section 9.5.16, “Reset: Hardware Reset and Power-Down”.]

Note:

1. The MAC Interface is not available for use until the TXCLK and RXCLK are valid.
2. The Control Register bit 0.15 does not represent the status of a hardware reset. It is a self-clearing bit that is used to initiate a software reset.

4.1.2.2 Power-On Reset

Entering Power-On Reset

When power is applied to the ICS1893BF, it waits until the potential between VDD and VSS achieves a minimum voltage before entering reset and executing the steps listed in Section 4.1.1.1, “Entering Reset”. After entering reset from a power-on condition, the ICS1893BF remains in reset for approximately 20 µs. (For details on this transition, see Section 9.5.15, “Reset: Power-On Reset”.)

Exiting Power-On Reset

The ICS1893BF automatically exits reset and performs the same steps as for a hardware reset. (See Section 4.1.1.2, “Exiting Reset”.)

Note: The only difference between a hardware reset and a power-on reset is that during a power-on reset, the ICS1893BF isolates its RESETn input pin. All other functionality is the same. As with a hardware reset, Control Register bit 0.15 does not represent the status of a power-on reset.

Copyright © 2009, IDT, Inc.
All rights reserved.

4.1.2.3 Software Reset

Entering Software Reset

Initiation of a software reset occurs when a management entity writes a logic one to Control Register bit 0.15. When this write occurs, the ICS1893BF enters the reset state for two REF_IN clock cycles.

Note: Entering a software reset is nearly identical to entering a hardware reset or a power-on reset, except that during a software-initiated reset, the ICS1893BF does not enter the power-down state.

Exiting Software Reset

At the completion of a reset (either hardware, power-on, or software), the ICS1893BF sets all registers to their default values. This action automatically clears (that is, sets equal to logic zero) Control Register bit 0.15, the software reset bit. Therefore, for a software reset (only), bit 0.15 is a self-clearing bit that indicates the completion of the reset process.

Note:

1. The RESETn pin is active low but Control Register bit 0.15 is active high.
2. Exiting a software reset is nearly identical to exiting a hardware reset or a power-on reset, except that upon exiting a software-initiated reset, the ICS1893BF does not re-latch its Serial Management Port Address into the Extended Control Register. [For information on the Serial Management Port Address, see Section 7.11.3, “PHY Address (bits 16.10:6)”.]
3. The Control Register bit 0.15 does not represent the status of a hardware reset. It is a self-clearing bit that is used to initiate a software reset. During a hardware or power-on reset, Control Register bit 0.15 does not get set to logic one. As a result, this bit 0.15 cannot be used to indicate the completion of the reset process for hardware or power-on resets.

4.2 Power-Down Operations

The ICS1893BF enters the power-down state whenever either (1) the RESETn pin is low or (2) Control Register bit 0.11 (the Power-Down bit) is logic one. In the power-down state, the ICS1893BF disables all internal functions and drives all MAC Interface output pins to logic zero except for those that support the MII Serial Management Port. In addition, the ICS1893BF tri-states its Twisted-Pair Transmit pins (TP_TXP and TP_TXN) to achieve an additional reduction in power.

There is one significant difference between entering the power-down state by setting Control Register bit 0.11 as opposed to entering the power-down state during a reset. When the ICS1893BF enters the power-down state:

- By setting Control Register bit 0.11, the ICS1893BF maintains the value of all Management Register bits except for the latching low (LL), latching high (LH), and latching maximum (LMX) status bits. Instead, these LL, LH, and LMX Management Register bits are re-initialized to their default values.
- During a reset, the ICS1893BF sets all of its Management Register bits to their default values. It does not maintain the state of any Management Register bit.

For more information on power-down operations, see the following:

- Section 7.14, “Register 19: Extended Control Register 2”
- Section 9.4, “DC Operating Characteristics”, which has tables that specify the ICS1893BF power consumption while in the power-down state

Copyright © 2009, IDT, Inc.
All rights reserved.

4.3 Automatic Power-Saving Operations

The ICS1893BF has power-saving features that automatically minimize its total power consumption while it is operating. Table 4-1 lists the ICS1893BF automatic power-saving features for the various modes.

Table 4-1. Automatic Power-Saving Features, 10Base-T and 100Base-TX Modes

Power-Saving Feature	Mode for ICS1893BF	
	10Base-T Mode	**100Base-TX Mode**
Disable Internal Modules	In 10Base-T mode, the ICS1893BF disables all its internal 100Base-TX modules.	In 100Base-TX mode, the ICS1893BF disables all its internal 10Base-T modules.
STA Control of Automatic Power-Saving Features	When an STA sets the state of the ICS1893BF Extended Control Register 2, bit 19.0 to logic: • Zero, the 100Base-TX modules always remain enabled, even during 10Base-T operations. • One, the ICS1893BF automatically disables 100Base-TX modules while the ICS1893BF is operating in 10Base-T mode.	When an STA sets the state of the ICS1893BF Extended Control Register 2, bit 19.1 to logic: • Zero, the 10Base-T modules always remain enabled, even during 100Base-TX operations. • One, the ICS1893BF automatically disables 10Base-T modules while the ICS1893BF is operating in 100Base-TX mode.

4.4 Auto-Negotiation Operations

The ICS1893BF has an Auto-Negotiation sublayer and provides a Control Register bit (bit 0.12) to determine whether its Auto-Negotiation sublayer is enabled or disabled.

When enabled, the ICS1893BF Auto-Negotiation sublayer exchanges technology capability data with its remote link partner and automatically selects the highest-performance operating mode it has in common with its remote link partner. For example, if the ICS1893BF supports 100Base-TX and 10Base-T modes – but its link partner supports 100Base-TX and 100Base-T4 modes – the two devices automatically select 100Base-TX as the highest-performance common operating mode. For details regarding initialization and control of the auto-negotiation process, see Section 6.2, “Functional Block: Auto-Negotiation”.

Copyright © 2009, IDT, Inc.
All rights reserved.

4.5 100Base-TX Operations

The ICS1893BF 100Base-TX mode provides 100Base-TX physical layer (PHY) services as defined in the ISO/IEC 8802-3 standard. In the 100Base-TX mode, the ICS1893BF is a 100M translator between a MAC and the physical transmission medium. As such, the ICS1893BF has two interfaces, both of which are fully configurable: one to the MAC and one to the Link Segment. In 100Base-TX mode, the ICS1893BF provides the following functions:

- Data conversion from both parallel-to-serial and serial-to-parallel formats
- Data encoding/decoding (4B/5B, NRZ/NRZI, and MLT-3)
- Data scrambling/descrambling
- Data transmission/reception over a twisted-pair medium

To accurately transmit and receive data, the ICS1893BF employs DSP-based wave shaping, adaptive equalization, and baseline wander correction. In addition, in 100Base-TX mode, the ICS1893BF provides a variety of control and status means to assist with Link Segment management. For more information on 100Base-TX, see Section 6.4, “Functional Block: 100Base-TX TP-PMD Operations”.

4.6 10Base-T Operations

The ICS1893BF 10Base-T mode provides 10Base-T physical layer (PHY) services as defined in the ISO/IEC 8802-3 standard. In the 10Base-T mode, the ICS1893BF is a 10M translator between a MAC and the physical transmission medium. In 10Base-T mode, the ICS1893BF provides the following functions:

- Data conversion from both parallel-to-serial and serial-to-parallel formats
- Manchester data encoding/decoding
- Data transmission/reception over a twisted-pair medium

4.7 Half-Duplex and Full-Duplex Operations

The ICS1893BF supports half-duplex and full-duplex operations for both 10Base-T and 100Base-TX applications. Full-duplex operation allows simultaneous transmission and reception of data, which effectively doubles the Link Segment throughput to either 20 Mbps (for 10Base-T operations) or 200 Mbps (for 100Base-TX operations).

As per the ISO/IEC standard, full-duplex operations differ slightly from half-duplex operations. These differences are necessary, as during full-duplex operations a PHY actively uses both its transmit and receive data paths simultaneously.

- In 10Base-T full-duplex operations, the ICS1893BF disables its loopback function (that is, it does not automatically loop back data from its transmitter to its receiver) and disables its SQE Test function.
- In both 10Base-T and 100Base-TX full-duplex operations, the ICS1893BF asserts its CRS signal only in response to receive activity while its COL signal always remains inactive.

For more information on half-duplex and full-duplex operations, see the following sections:

- Section 7.2, “Register 0: Control Register”
- Section 7.2.8, “Duplex Mode (bit 0.8)”
- Section 7.3, “Register 1: Status Register”
- Section 7.6, “Register 4: Auto-Negotiation Register”

Copyright © 2009, IDT, Inc.
All rights reserved.

4.8 Auto-MDI/MDIX Crossover (New)

The ICS1893BF includes the auto-MDI/MDIX crossover feature. In a typical CAT 5 Ethernet installation the transmit twisted pair signal pins of the RJ45 connector are crossed over in the CAT 5 wiring to the partners receive twisted pair signal pins and receive twisted pair to the partners transmit twisted pair. This is usually accomplished in the wiring plant. Hubs generally wire the RJ45 connector crossed to accomplish the crossover. Two types of CAT 5 cables (straight and crossed) are available to achieve the correct connection. The Auto-MDI/MDIX feature automatically corrects for miss-wired installations by automatically swapping transmit and receive signal pairs at the PHY when no link results. Auto-MDI/MDIX is automatic, but may be disabled for test purposes using the AMDIX_EN pin or by writing MDIO register 19 Bits 9:8 in the MDIO register. The Auto-MDI/MDIX function is independent of Auto-Negotiation and preceeds Auto-Negotiation when enabled.

Copyright © 2009, IDT, Inc.
All rights reserved.

Chapter 5 Interface Overviews

The ICS1893BF MAC Interface is fully configurable, thereby allowing it to accommodate many different applications.

This chapter includes overviews of the following MAC-to-PHY interfaces:

- Section 5.1, “MII Data Interface”
- Section 5.2, “Serial Management Interface”
- Section 5.3, “Twisted-Pair Interface”
- Section 5.4, “Clock Reference Interface”
- Section 5.5, “Status Interface”

Copyright © 2009, IDT, Inc.
All rights reserved.

5.1 MII Data Interface

The ICS1893BF's MAC Interface is the Media Independent Interface (MII) operating at either 10 Mbps or 100 Mbps. The ICS1893BF MAC Interface is configured for the MII Data Interface mode, data is transferred between the PHY and the MAC as framed, 4-bit parallel nibbles. In addition, the interface also provides status and control signals to synchronize the transfers.

The ICS1893BF provides a full complement of the ISO/IEC-specified MII signals. Its MII has both a transmit and a receive data path to synchronously exchange 4 bits of data (that is, nibbles).

- The ICS1893BF's MII transmit data path includes the following:
  - A data nibble, TXD[3:0]
  - A transmit data clock to synchronize transfers, TXCLK
  - A transmit enable signal, TXEN
  - The TXER pin is not available on the ICS1893BF
- The ICS1893BF's MII receive data path includes the following:
  - A separate data nibble, RXD[3:0]
  - A receive data clock to synchronize transfers, RXCLK
  - A receive data valid signal, RXDV

Both the MII transmit clock and the MII receive clock are provided to the MAC/Reconciliation sublayer by the ICS1893BF (that is, the ICS1893BF sources the TXCLK and RXCLK signals to the MAC).

Clause 22 also defines as part of the MII a Carrier Sense signal (CRS) and a Collision Detect signal (COL). The ICS1893BF is fully compliant with these definitions and sources both of these signals to the MAC. When operating in:

- Half-duplex mode, the ICS1893BF asserts the Carrier Sense signal when data is being either transmitted or received. While operating in half-duplex mode, the ICS1893BF also asserts its Collision Detect signal to indicate that data is being received while a transmission is in progress.
- Full-duplex mode, the ICS1893BF asserts the Carrier Sense signal only when receiving data and forces the Collision Detect signal to remain inactive.

As mentioned in Section 4.1.1.3, "Hot Insertion", the ICS1893BF design allows hot insertion of its MII. That is, it is possible to connect its MII to a MAC when power is already applied to the MAC. To support this functionality, the ICS1893BF isolates its MII signals and tri-states the signals on all Twisted-Pair Transmit pins (TP_TXP and TP_TXN) during a power-on reset. Upon completion of the reset process, the ICS1893BF enables its MII and enables its Twisted-Pair Transmit signals.

Copyright © 2009, IDT, Inc.
All rights reserved.

5.2 Serial Management Interface

The ICS1893BF provides an ISO/IEC compliant, two-wire Serial Management Interface as part of its MAC Interface. This Serial Management Interface is used to exchange control, status, and configuration information between a Station Management entity (STA) and the physical layer device (PHY), that is, the ICS1893BF.

The ISO/IEC standard also specifies a frame structure and protocol for this interface as well as a set of Management Registers that provide the STA with access to a PHY such as the ICS1893BF. A Serial Management Interface is comprised of two signals: a bi-directional data pin (MDIO) along with an associated input pin for a clock (MDC). The clock is used to synchronize all data transfers between the ICS1893BF and the STA.

In addition to the ISO/IEC defined registers, the ICS1893BF provides several extended status and control registers to provide more refined control of the MII and MDI interfaces. For example, the QuickPoll Detailed Status Register provides the ability to acquire the most-important status functions with a single MDIO read.

Note: In the ICS1893BF, the MDIO and MDC pins remain active for all the MAC Interface modes (that is, 10M MII, 100M MII, 100M Symbol, and 10M Serial).

5.3 Twisted-Pair Interface

For the twisted-pair interface, the ICS1893BF uses 1:1 ratio transformers for both transmit and receive.

Better operation results from using a split ground plane through the transformer. In this case:

- The RJ-45 transformer windings must be on the chassis ground plane along with the Bob Smith termination.
- The ICS1893BF system ground plane must include the ICS1893BF-side transformer windings along with the 61.9Ω resistors and the 120-nH inductor.
- The transformer provides the isolation with one set of windings on one ground plane and another set of windings on the second ground plane.

5.3.1 Twisted-Pair Transmitter

The twisted-pair transmitter driver uses an H-bridge configuration. IDT transformer requirements:

- Turns Ratio 1:1
- Chokes may be used on chip or cable side or both sides
- No power connections to the transformer. Transformer power is supplied by the ICS1893BF
- MIDCOM 7090-37 or equivalent symetrical magnetics are used

Figure 5-1 shows the design for the ICS1893BF twisted-pair interface.

- Two 61.9Ω 1% resistors are in series, with a 120-nH 5% inductor between them. These components form a network that connects across both pairs of twisted pairs A and B.
- The center taps on the chip side are each bypassed to VSS with a 0.1uf capacitor. Do not connect the chip side center taps together (use separate bypass capacitors). The ICS1893BF biases the selected transmit pair and receive pair differently based on assigned function.
- Both twisted pairs A and B have an assigned plus and minus.

Note:

1. Keep all TX traces as short as possible.
2. When longer board twisted pair traces are used, 50Ω characteristic board trace impedance is desirable.

Copyright © 2009, IDT, Inc.
All rights reserved.

Figure 5-1. ICS1893BF Twisted Pair

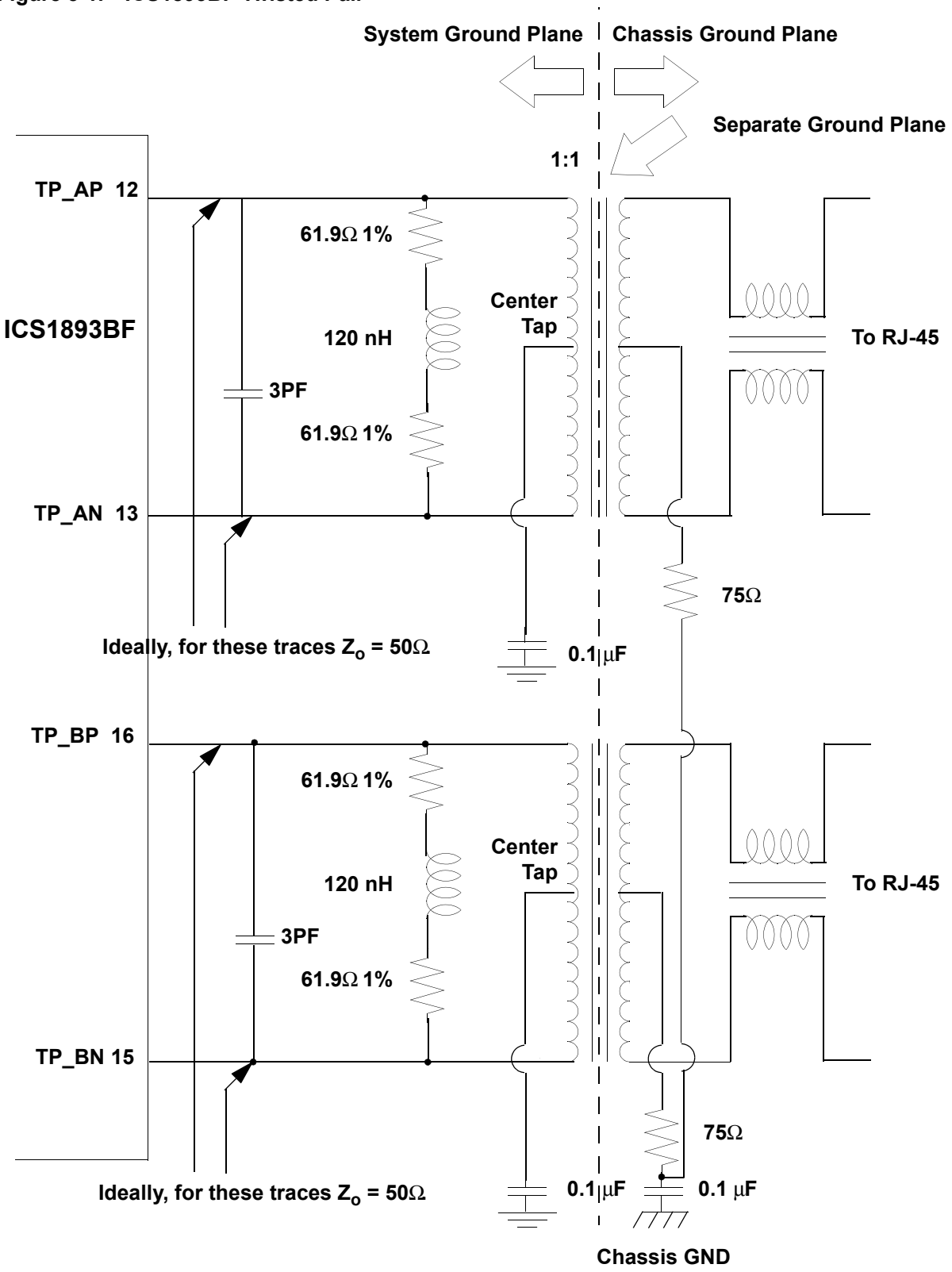

Copyright © 2009, IDT, Inc.
All rights reserved.

5.4 Clock Reference Interface

The REF_IN pin provides the ICS1893BF Clock Reference Interface. The ICS1893BF requires a single clock reference with a frequency of 25 MHz ±50 parts per million. This accuracy is necessary to meet the interface requirements of the ISO/IEEE 8802-3 standard, specifically clauses 22.2.2.1 and 24.2.3.4. The ICS1893BF supports two clock source configurations: a CMOS oscillator or a CMOS driver. The input to REF_IN is CMOS (10% to 90% VDD), not TTL. Alternately, a 25MHz crystal may be used. The Oscillator specifications are shown in Table 5.2.

Figure 5-2. Crystal or Oscillator Operation

Crystal

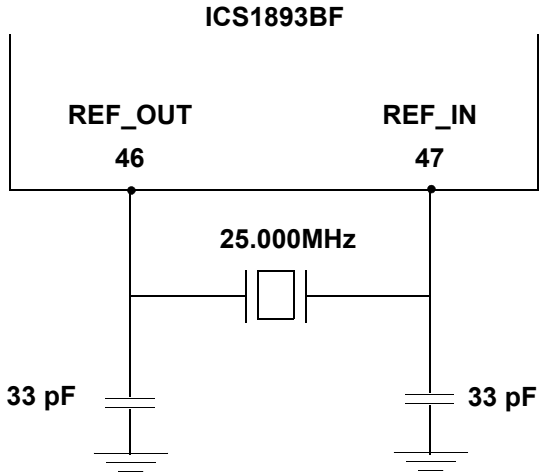

Oscillator

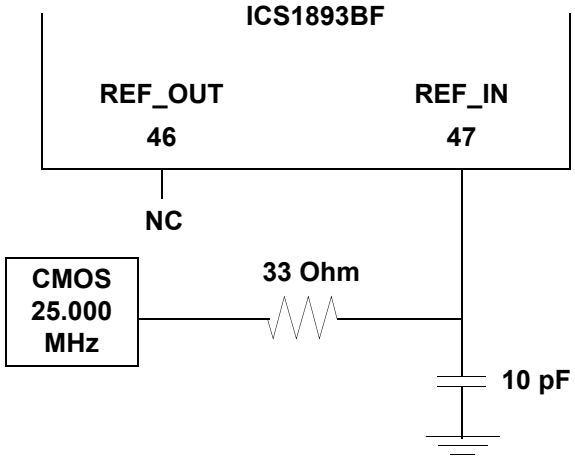

Copyright © 2009, IDT, Inc.
All rights reserved.

If a crystal is used as the clocking source, connect it to both the Ref_in (pin 47) and Ref_out (pin 46) pins of the ICS1893BF. A pair of bypass capacitors on either side of the crystal are connected to ground. The crystal is used in the parallel resonance or anti-resonance mode. The value of the bypass caps serve to adjust the final frequency of the crystal oscillation. Typical applications would use 33pF bypass caps. The exact value will be affected by the board routing capacitance on Ref_in and Ref_out pins. Smaller bypass capacitors raise the frequency of oscillation. Once the exact value of bypass capacitance is established it will be the same for all boards using the same specification crystal. The best way to measure the crystal frequency is to measure the frequency of TXCLK (pin 37) using a frequency counter with a 10 second sample. Using TXCLK prevents affecting the crystal frequency by the measurement. The crystal specification is shown in Table 5.1.

Table 5-1. 25MHz Crystal Specification

Specifications	Symbol	Minimum	Typical	Maximum	Unit
Fundamental Frequency (tolerance is sum of freq., temp., stability and aging.)	F0	24.99875	25.00000	25.00125	MHz
Freq. Tolerance	ΔF/f			±50	ppm
Input Capacitance	Cin		3		pF

Table 5-2. 25MHz Oscillator Specification

Specifications	Symbol	Minimum	Typical	Maximum	Unit
Output Frequency	F0	24.99875	25.00000	25.00125	MHz
Freq. Stability (including aging)	ΔF/f			±50	ppm
Duty cycle CMOS level one-half VDD	Tw/T	35		65	%
VIH		2.79			Volts
VIL				0.33	Volts
Period Jitter	Tjitter			500	pS
Input Capacitance	CIN		3		pF

Copyright © 2009, IDT, Inc.
All rights reserved.

5.5 Status Interface

The ICS1893BF provides five multi-function configuration pins that report the results of continual link monitoring by providing signals that are intended for driving LEDs. (For the pin numbers, see Table 8.6.)

Table 5-3. Pins for Monitoring the Data Link

Pin	LED Driven by the Pin's Output Signal
P0AC	AC (Link **Ac**tivity) LED
P1CL	CL (**C**o**l**lisions) LED
P2LI	LI (**L**ink **I**ntegrity) LED
P3TD	TD (**T**ransmit **D**ata) LED
P4RD	RD (**R**eceive **D**ata) LED

Note:

1. During either a power-on reset or a hardware reset, each multi-function configuration pin is an input that is sampled when the ICS1893BF exits the reset state. After sampling is complete, these pins are output pins that can drive status LEDs.
2. A software reset does not affect the state of a multi-function configuration pin. During a software reset, all multi-function configuration pins are outputs.
3. Each multi-function configuration pin must be pulled either up or down with a resistor to establish the address of the ICS1893BF. LEDs may be placed in series with these resistors to provide a designated status indicator as described in Table 5-3.

   Caution: All pins listed in Table 5-3 must not float.
4. As outputs, the asserted state of a multi-function configuration pin is the inverse of the sense sampled during reset. This inversion provides a signal that can illuminate an LED during an asserted state. For example, if a multi-function configuration pin is pulled down to ground through an LED and a current-limiting resistor, then the sampled sense of the input is low. To illuminate this LED for the asserted state, the output is driven high.
5. Adding 10KΩ resistors across the LEDs ensures the PHY address is fully defined during slow VDD power-ramp conditions.
6. PHY address 00 tri-states the MII interface. (Do not select PHY address 00 unless you want the MII tri-stated.)

Copyright © 2009, IDT, Inc.
All rights reserved.

Figure 5-3 shows typical biasing and LED connections for the ICS1893BF.

Figure 5-3. ICS1893BF LED - PHY Interface

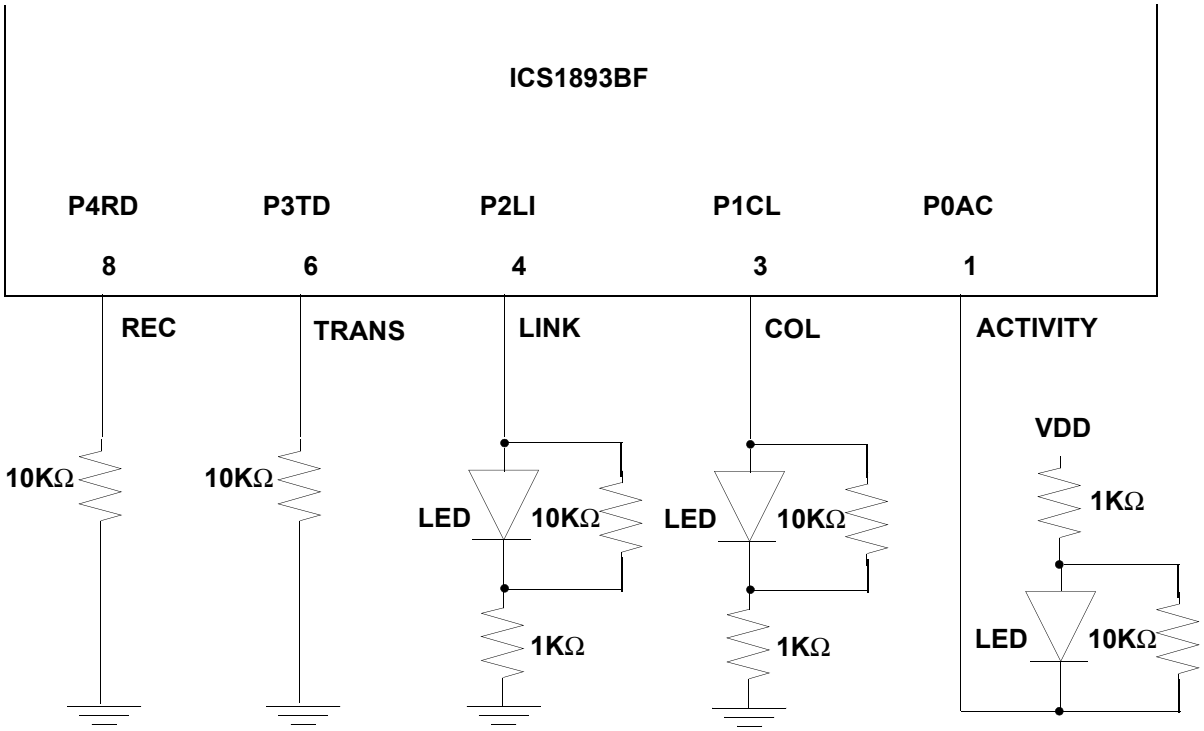

This circuit decodes to PHY address = 1.

Notes:

1. **All LED pins must be set during reset.**
2. **Caution: PHY address 00 tri-states the MII interface. Don't use PHY address 00.**
3. **For more reliable address capture during power-on reset, add a 10KΩ resistor across the LED.**

Copyright © 2009, IDT, Inc.
All rights reserved.

Chapter 6 Functional Blocks

This chapter discusses the following ICS1893BF functional blocks.

- Section 6.1, “Functional Block: Media Independent Interface”
- Section 6.2, “Functional Block: Auto-Negotiation”
- Section 6.3, “Functional Block: 100Base-X PCS and PMA Sublayers”
- Section 6.4, “Functional Block: 100Base-TX TP-PMD Operations”
- Section 6.5, “Functional Block: 10Base-T Operations”
- Section 6.6, “Functional Block: Management Interface”

Copyright © 2009, IDT, Inc.
All rights reserved.

6.1 Functional Block: Media Independent Interface

All ICS1893BF MII interface signals are fully compliant with the ISO/IEC 8802-3 standard. In addition, the ICS1893BF MIIs can support two data transfer rates: 25 MHz (for 100Base-TX operations) and 2.5 MHz (for 10Base-T operations).

The Media Independent Interface (MII) consists of two primary components:

1. An interface between a MAC (Media Access Control sublayer) and the PHY (that is, the ICS1893BF). This MAC-PHY part of the MII consists of three subcomponents:
   a. A synchronous Transmit interface that includes the following signals:
      (1) A data nibble, TXD[3:0]
      (2) A delimiter, TXEN
      (3) A clock, TXCLK
   b. A synchronous Receive interface that includes the followings signals:
      (1) A data nibble, RXD[3:0]
      (2) An error indicator, RXER
      (3) A delimiter, RXDV
      (4) A clock, RXCLK
   c. A Media Status or Control interface that consists of a Carrier Sense signal (CRS) and a Collision Detection signal (COL).
2. An interface between the PHY (the ICS1893BF) and an STA (Station Management entity). The STA-PHY part of the MII is a two-wire, Serial Management Interface that consists of the following:
   a. A clock (MDC)
   b. A synchronous, bi-directional data signal (MDIO) that provides an STA with access to the ICS1893BF Management Register set

The ICS1893BF Management Register set (discussed in Chapter 7, “Management Register Set”) consists of the following:

- Basic Management registers.

  As defined in the ISO/IEC 8802-3 standard, these registers include the following:
  – Control Register (register 0), which handles basic device configuration
  – Status Register (register 1), which reports basic device capabilities and status
- Extended Management registers.

  As defined in the ISO/IEC 8802-3 standard, the ICS1893BF supports Extended registers that provide access to the Organizationally Unique Identifier and all auto-negotiation functionality.
- ICS (Vendor-Specific) Management registers.

  The ICS1893BF provides vendor-specific registers for enhanced PHY operations. Among these is the QuickPoll Detailed Status Register that provides a comprehensive and consolidated set of real-time PHY information. Reading the QuickPoll register enables the MAC to obtain comprehensive status data with a single register access.

Copyright © 2009, IDT, Inc.
All rights reserved.

6.2 Functional Block: Auto-Negotiation

The auto-negotiation logic of the ICS1893BF has the following main functions:

- To determine the capabilities of the remote link partner, (that is, the device at the other end of the link segment's medium or cable)
- To advertise the capabilities of the ICS1893BF to the remote link partner
- To establish a protocol with the remote link partner using the highest-performance operating mode that they have in common

The design of the ICS1893BF Auto-Negotiation sublayer supports both legacy 10Base-T connections as well as new connections that have multiple technology options for the link. For example, when the ICS1893BF has the auto-negotiation process enabled and it is operating with a 10Base-T remote link partner, the ICS1893BF monitors the link and automatically selects the 10Base-T operating mode – even though the remote link partner does not support auto-negotiation. This process, called parallel detection, is automatic and transparent to the remote link partner and allows the ICS1893BF to function seamlessly with existing legacy network structures without any management intervention.

(For an overview of the auto-negotiation process, see Section 4.4, "Auto-Negotiation Operations".)

6.2.1 Auto-Negotiation General Process

The Auto-Negotiation sublayer uses a physical signaling technique that is transparent at the packet level and all higher protocol levels. This technique builds on the link pulse mechanism employed in 10Base-T operations and is fully compliant with clause 28 of the ISO/IEC 8802-3 standard.

During the auto-negotiation process, both the ICS1893BF and its remote link partner use Fast Link Pulses (FLPs) to simultaneously 'advertise' (that is, exchange) information on their respective technology capabilities as follows:

1. For the auto-negotiation process to take place, both the ICS1893BF and its remote link partner must first both support and be enabled for Auto-Negotiation.
2. The ICS1893BF obtains the data for its FLP bursts from the Auto-Negotiation Advertisement Register (Register 4).
3. Both the ICS1893BF and the remote link partner substitute Fast Link Pulse (FLP) bursts in place of the Normal Link Pulses (NLPs). In each FLP burst, the ICS1893BF transmits information on its technology capability through its Link Control Word, which includes link configuration and status data.
4. Similarly, the ICS1893BF places the Auto-Negotiation data received from its remote link partner's FLP bursts into the Auto-Negotiation Link Partner Ability Register (Register 5).
5. After the ICS1893BF and its remote link partner exchange technology capability information, the ICS1893BF Auto-Negotiation sublayer contrasts the data in Registers 4 and 5 and automatically selects for the operating mode the highest-priority technology that both Register 4 and 5 have in common. (That is, both the ICS1893BF and its remote link partner use a predetermined priority list for selecting the operating mode, thereby ensuring that both sides of the link make the same selection.) As follows from Annex 28B of the ISO/IEC 8802-3 standard, the pre-determined technology priorities are listed from 1 (highest priority) to 5 (lowest priority):

   (1) 100Base-TX full duplex

   (2) 100Base-T4. (The ICS1893BF does not support this technology.)

   (3) 100Base-TX (half duplex)

   (4) 10Base-T full duplex

   (5) 10Base-T (half duplex)

Copyright © 2009, IDT, Inc.
All rights reserved.

6. To indicate that the auto-negotiation process is complete, the ICS1893BF sets bits 1.5 and 17.4 high to logic one. After successful completion of the auto-negotiation process, the ICS1893BF Auto-Negotiation sublayer performs the following steps:
   a. It sets to logic one the Status Register's Auto-Negotiation Complete bit (bit 1.5, which is also available in the QuickPoll register as bit 17.4).
   b. It enables the negotiated link technology (such as the 100Base Transmit modules and 100Base Receive modules).
   c. It disables the unused technologies to reduce the overall power consumption.

6.2.2 Auto-Negotiation: Parallel Detection

The ICS1893BF supports parallel detection. It is therefore compatible with networks that do not support the auto-negotiation process. When enabled, the Auto-Negotiation sublayer can detect legacy 10Base-T link partners as well as 100Base-TX link partners that do not have an auto-negotiation capability.

The Auto-Negotiation sublayer performs this parallel detection function when it does not get a response to its FLP bursts. In these situations, the Auto-Negotiation sublayer performs the following steps:

1. It sets the LP_AutoNeg_Able bit (bit 6.0) to logic zero, thereby identifying the remote link partner as not being capable of executing the auto-negotiation process.
2. It sets the bit in the Auto-Negotiation Link Partner Abilities Register that corresponds to the 'parallel detected' technology [for example, half-duplex, 10Base-T (bit 5.5) or half-duplex, 100Base-TX (bit 5.7)].
3. It sets the Status Register's Auto-Negotiation Complete bit (bit 1.5) to logic one, indicating completion of the auto-negotiation process.
4. It enables the detected link technology and disables the unused technologies.

A remote link partner that does not support the auto-negotiation process does not respond to the transmitted FLP bursts. The ICS1893BF detects this situation and responds according to the data it receives. The ICS1893BF can receive one of five potential responses to the FLP bursts it is transmitting: FLP bursts, 10Base-T link pulses (that is, Normal Link Pulses), scrambled 100Base IDLEs, nothing, or a combination of signal types.

A 10Base-T link partner transmits only Normal Link Pulses when idle. When the ICS1893BF receives Normal Link Pulses, it concludes that the remote link partner is a device that can use only 10Base-T technology. A 100Base-TX node without an Auto-Negotiation sublayer transmits 100M scrambled IDLE symbols in response to the FLP bursts. Upon receipt of the scrambled IDLEs, the ICS1893BF concludes that its remote link partner is a 100Base-TX node that does not support the auto-negotiation process. For both 10Base-T and 100Base-TX nodes without an Auto-Negotiation sublayer, the ICS1893BF clears bit 6.0 to logic zero, indicating that the link partner cannot perform the auto-negotiation process.

If the remote link partner responds to the FLP bursts with FLP bursts, then the link partner is a 100Base-TX node that can support the auto-negotiation process. In this case, the ICS1893BF sets to logic one the Auto-Negotiation Expansion Register's Link Partner Auto-Negotiation Ability bit (bit 6.0).

If the Auto-Negotiation sublayer does not receive any signal when monitoring the receive channel, then the QuickPoll Detailed Status Register's Signal Detect bit (bit 17.3) is set to logic one, indicating that no signal is present.

Another possibility is that the ICS1893BF senses that it is receiving multiple technology indications. In this situation, the ICS1893BF cannot determine which technology to enable. It informs the STA of this problem by setting to logic one the Auto-Negotiation Expansion Register's Parallel Detection Fault bit (bit 6.4).

Copyright © 2009, IDT, Inc.
All rights reserved.

6.2.3 Auto-Negotiation: Remote Fault Signaling

If the remote link partner detects a fault, the ICS1893BF reports the remotely detected fault to the STA by setting to logic one the Remote Fault Detected bit(s), 1.4, 5.13, 17.1, and 19.13. In general, the reception of a remote fault means that the remote link partner has a problem with the integrity of its receive channel.

Similarly, if the ICS1893BF detects a link fault, it transmits a remote fault-detected condition to its remote link partner. In this situation, the ICS1893BF sets to logic one the Auto-Negotiation Link Partner Ability Register's Remote Fault Indication bit (bit 4.13).

For details, see Section 7.14.3, "Remote Fault (bit 19.13)" and Section 7.3.9, "Remote Fault (bit 1.4)".

6.2.4 Auto-Negotiation: Reset and Restart

If enabled, execution of the ICS1893BF auto-negotiation process occurs at power-up and upon management request. There are two primary ways to begin the Auto-Negotiation state machine:

- ICS1893BF reset
- Auto-Negotiation Restart

6.2.4.1 Auto-Negotiation Reset

During a reset, the ICS1893BF initializes its Auto-Negotiation sublayer modules to their default states. (That is, the Auto-Negotiation Arbitration State Machine and the Auto-Negotiation Progress Monitor reset to their idle states.) In addition, the Auto-Negotiation Progress Monitor status bits are all set to logic zero. This action occurs for any type of reset (hardware reset, software reset, or power-on reset).

6.2.4.2 Auto-Negotiation Restart

As with a reset, during an Auto-Negotiation restart, the ICS1893BF initializes the Auto-Negotiation Arbitration State Machine and the Auto-Negotiation Progress Monitor modules to their default states. However, during an Auto-Negotiation Restart, the Auto-Negotiation Progress Monitor status bits maintain their current state. Only three events can alter the state of the Auto-Negotiation Progress Monitor status bits after a Restart: (1) an STA read operation, (2) a reset, or (3) the Auto-Negotiation Arbitration State Machine progressing to a higher state or value.

The Auto-Negotiation Progress Monitor Status bits change only if they are progressing to a state with a value greater than their current state (that is, a state with a higher logical value than that of their current state). For a detailed explanation of these bits and their operation, see Section 6.2.5, "Auto-Negotiation: Progress Monitor".

After the Auto-Negotiation Arbitration State Machine reaches its final state (which is Auto-Negotiation Complete), only an STA read of the QuickPoll Detailed Status Register or an ICS1893BF reset can alter these status bits.

Any of the following situations initiates a restart of the ICS1893BF Auto-Negotiation sublayer:

- A link failure
- In software mode:
  - Writing a logic one to the Control Register's Restart Auto-Negotiation bit (bit 0.9), which is a self-clearing bit.
  - Toggling the Control Register's Auto-Negotiation Enable bit (bit 0.12) from a logic one to a logic zero, and back to a logic one.

Copyright © 2009, IDT, Inc.
All rights reserved.

6.2.5 Auto-Negotiation: Progress Monitor

Under typical circumstances, the Auto-Negotiation sublayer can establish a connection with the ICS1893BF's remote link partner. However, some situations can prevent the auto-negotiation process from properly achieving this goal. For these situations, the ICS1893BF has an Auto-Negotiation Progress Monitor to provide detailed status information to its Station Management (STA) entity. With this status information, the STA can diagnose the failure mechanism and – in some situations – establish the link by correcting the problem.

When enabled, the auto-negotiation process typically requires less than 500 ms to execute, independent of the link partner's ability to perform the auto-negotiation process. Typically, an STA polls both the Auto-Negotiation Complete bit (bit 1.5) and the Link Status bit (bit 1.2) to determine when a link is successfully established, either through auto-negotiation or parallel detection. The STA can then poll the Auto-Negotiation Link Partner Ability Register and determine the highest-performance operating mode in common with the capabilities it is advertising.

6.3 Functional Block: 100Base-X PCS and PMA Sublayers

The ICS1893BF is fully compliant with clause 24 of the ISO/IEC specification, which defines the 100Base-X Physical Coding sublayer (PCS) and Physical Medium Attachment (PMA) sublayers.

6.3.1 PCS Sublayer

The ICS1893BF 100Base-X PCS sublayer provides two interfaces: one to a MAC and the other to the ICS1893BF PMA sublayer. An ICS1893's PCS sublayer performs the transmit, receive, and control functions and consists of the following:

- PCS Transmit sublayer, which provides the following:
  - Parallel-to-serial conversion
  - 4B/5B encoding
  - Collision detection
- PCS Receive sublayer, which provides the following:
  - Serial-to-parallel conversion
  - 4B/5B encoding
  - Carrier detection
  - Code group framing
- PCS control functions, which provide:
  - Assertion of the CRS (carrier sense) signal
  - Assertion of the COL (collision detection) signal

6.3.2 PMA Sublayer

The ICS1893BF 100Base-X PMA Sublayer consists of two interfaces: one to the Physical Coding sublayer and the other to the Physical Medium Dependent sublayer. Functionally, the PMA sublayer is responsible for the following:

- Link Monitoring
- Carrier Detection
- NRZI encoding/decoding
- Transmit Clock Synthesis
- Receive Clock Recovery

Copyright © 2009, IDT, Inc.
All rights reserved.

6.3.3 PCS/PMA Transmit Modules

Both the PCS and PMA sublayers have Transmit modules.

6.3.3.1 PCS Transmit Module

The ICS1893BF PCS Transmit module accepts nibbles from the MAC Interface and converts the nibbles into 5-bit ‘code groups’ (referred to here as ‘symbols’). In addition, the PCS Transmit module performs a parallel-to-serial conversion on the symbols, and subsequently passes the resulting serial bit stream to the PMA sublayer.

The first 16 nibbles of each MAC Frame represent the Frame Preamble. The PCS replaces the first two nibbles of the Frame Preamble with the Start-of-Stream Delimiter (SSD), that is, the symbols /J/K/. After receipt of the last Frame nibble, detected when TX_EN = FALSE, the PCS appends to the end of the Frame an End-of-Stream Delimiter (ESD), that is, the symbols /T/R/. (The ICS1893BF PCS does not alter any other data included within the Frame.)

The PCS Transmit module also performs collision detection. In compliance with the ISO/IEC specification, when the transmission and reception of data occur simultaneously and the ICS1893BF is in:

- Half-duplex mode, the ICS1893BF asserts the collision detection signal (COL).
- Full-duplex mode, COL is always FALSE.

6.3.3.2 PMA Transmit Module

The ICS1893BF PMA Transmit module accepts a serial bit stream from its PCS and converts the data into NRZI format. Subsequently, the PMA passes the NRZI bit stream to the Twisted-Pair Physical Medium Dependent (TP-PMD) sublayer.

The ICS1893BF PMA Transmit module uses a digital PLL to synthesize a transmit clock from the Clock Reference Interface.

6.3.4 PCS/PMA Receive Modules

Both the PCS and PMA sublayers have Receive modules.

6.3.4.1 PCS Receive Module

The ICS1893BF PCS Receive module accepts both a serial bit stream and a clock signal from the PMA sublayer. The PCS Receive module converts the bit stream from a serial format to a parallel format and then processes the data to detect the presence of a carrier.

When a link is in the idle state, the PCS Receive module receives IDLE symbols. (All bits are logic one.) Upon receiving two non-contiguous zeros in the bit stream, the PCS Receive module examines the ensuing bits and attempts to locate the Start-of-Stream Delimiter (SSD), that is, the /J/K/ symbols.

Upon verification of a valid SSD, the PCS Receive module substitutes the first two standard nibbles of a Frame Preamble for the detected SSD. In addition, the PCS Receive module uses the SSD to begin framing the ensuing data into 5-bit code symbols. The final PCS Receive module performs 4B/5B decoding on the symbols and then synchronously passes the resulting nibbles to the MAC Interface.

The Receive state machine continues to accept PMA data, convert it from serial to parallel format, frame it, decode it, and pass it to the MAC Interface. During this time, the Receive state machine alternates between Receive and Data States. It continues this process until detecting one of the following:

- An End-of-Stream Delimiter (ESD, that is, the /T/R/ symbols)
- An error
- A premature end (IDLEs)

Copyright © 2009, IDT, Inc.
All rights reserved.

Upon receipt of an ESD, the Receive state machine returns to the IDLE state without passing the ESD to the MAC Interface. Detection of an error forces the Receive state machine to assert the receive error signal (RX_ER) and wait for the next symbol. If the ICS1893BF Receive state machine detects a premature end, it forces the assertion of the RX_ER signal, sets the Premature End bit (bit 17.5) to logic one, and transitions to the IDLE State.

6.3.4.2 PMA Receive Modules

The ICS1893BF has a PMA Receive module that provides the following functions:

- NRZI Decoding

  The Receive module performs the NRZI decoding on the serial bit stream received from the Twisted-Pair Physical Medium Dependent (TP-PMD) sublayer. It converts the bit stream to a unipolar, positive, binary format that the PMA subsequently passes to the PCS.

- Receive Clock Recovery

  The Receive Clock Recovery function consists of a phase-locked loop (PLL) that operates on the serial data stream received from the PMD sublayer. This PLL automatically synchronizes itself to the clock encoded in the serial data stream and then provides both a recovered clock and data stream to the PCS.

- Link Monitoring
  - The ICS1893BF's PMA Link Monitoring function observes the Receive Clock PLL. If the Receive Clock PLL cannot acquire 'lock' on the serial data stream, it asserts an error signal. The status of this error signal can be read in the QuickPoll Detailed Status Register's PLL Lock Error bit (bit 17.9). This bit is a latching high (LH) bit. (For more information on latching high and latching low bits, see Section 7.1.4.1, "Latching High Bits" and Section 7.1.4.2, "Latching Low Bits".)
  - In addition, the ICS1893BF's PMA Link Monitor function continually audits the state of the connection with the remote link partner. It asserts a receive channel error if a receive signal is not detected or if a PLL Lock Error occurs. These errors, in turn, generate a link fault and force the link monitor function to clear both the Status Register's Link Status bit (bit 1.2) and the QuickPoll Detailed Status Register's Link Status bit (bit 17.0).

6.3.5 PCS Control Signal Generation

For the PCS sublayer, there are two control signals: a Carrier Sense signal (CRS) and a Collision Detect signal (COL).

The CRS control signals is generated as follows:

1. When a logic zero is detected in an idle bit stream, the Receive Functions examines the ensuing bits.
2. When the Receive Functions find the first two non-contiguous zero bits, the Receive state machine moves into the Carrier Detect state.
3. As a result, the Boolean Receiving variable is set to TRUE.
4. Consequently, the Carrier Sense state machine moves into the Carrier Sense 'on' state, which asserts the CRS signal.
5. If the PCS Functions:
   a. Cannot confirm either the /I/J/ (IDLE, J) symbols or the /J/K/ symbols, the receive error signal (RX_ER) is asserted, and the Receive state machine returns to the IDLE state. In IDLE, the Boolean Receiving variable is set to FALSE, thereby causing the Carrier Sense state machine to set the CRS signal to FALSE.
   b. Can confirm the /I/J/K/ symbols, then the Receive state machine transitions to the 'Receive' state.

The COL control signal is generated by the transmit modules. For details, see Section 6.3.3.1, "PCS Transmit Module".

Copyright © 2009, IDT, Inc.
All rights reserved.

6.3.6 4B/5B Encoding/Decoding

The 4B/5B encoding methodology maps each 4-bit nibble to a 5-bit symbol (also called a “code group”). There are 32 five-bit symbols, which include the following:

- Of the 32 five-bit symbols, 16 five-bit symbols are required to represent the 4-bit nibbles.
- The remaining 16 five-bit symbols are available for control functions. The IEEE Standard defines 6 symbols for control, and the remaining 10 symbols of this grouping are invalid. The 6 control symbols include the following:
  - /H/, which represents a Halt, also used to signify a Transmit Error
  - /I/, which represents an IDLE
  - /J/, which represents the first symbol of the Start-of-Stream Delimiter (SSD)
  - /K/, which represents the second symbol of the Start-of-Stream Delimiter (SSD)
  - /T/, which represents the first symbol of the End-of-Stream Delimiter (ESD)
  - /R/, which represents the second symbol of the End-of-Stream Delimiter (ESD)

  If the ICS1893BF PCS receives:
  - One of the 10 undefined symbols, it sets its QuickPoll Detailed Status Register’s Invalid Symbol bit (bit 17.7) to logic one.
  - A Halt symbol, it sets the Halt Symbol Detected bit in its QuickPoll Detailed Status Register (bit 17.6) to logic one.

Note: An STA can force the ICS1893BF to transmit symbols that are typically classified as invalid, by both (1) setting the Extended Control Register’s Transmit Invalid Codes bit (bit 16.2) to logic one and (2) asserting the associated TXER signal. For more information, see Section 7.11.7, “Invalid Error Code Test (bit 16.2)”.

6.4 Functional Block: 100Base-TX TP-PMD Operations

The ICS1893BF supports both 10Base-T and 100Base-TX operations. For 100Base-TX operations, the TP-PMD module performs stream-cipher scrambling/descrambling and MLT-3 encoding/decoding (3-level, multi-level transition) in compliance with the ANSI Standard X3.263: 199X FDDI TP-PMD as defined in the specification for 100Base-TX Twisted-Pair Physical Media Dependent (TP-PMD) Sublayer. The ICS1893BF’s TP-PMD also performs DC restoration (that is, baseline wander correction) and adaptive equalization on the received signals.

Note:

1. For an overview of 100Base-TX operations, see Section 4.5, “100Base-TX Operations”.
2. For more information on the Twisted-Pair Interface, see Section 5.3, “Twisted-Pair Interface”.

6.4.1 100Base-TX Operation: Stream Cipher Scrambler/Descrambler

When the ICS1893BF is operating in 100Base-TX mode, it employs a stream cipher scrambler/descrambler that complies with the ANSI Standard X3.263: 199X FDDI TP-PMD. The purpose of the stream cipher scrambler is to spread the transmission spectrum to minimize electromagnetic compatibility problems. The stream cipher descrambler restores the received serial bit stream to its unscrambled form.

The ICS1893BF “seeds” (that is, initializes) the Transmit Stream Cipher Shift register by using the ICS1893BF PHY address from Table 7-16, which minimizes crosstalk and noise in repeater applications.

The MAC Interface bypasses the stream cipher scrambler/descrambler when in the 100M Symbol Interface mode.

Copyright © 2009, IDT, Inc.
All rights reserved.

6.4.2 100Base-TX Operation: MLT-3 Encoder/Decoder

When operating in the 100Base-TX mode, the ICS1893BF TP-PMD sublayer employs an MLT-3 encoder and decoder. During data transmission, the TP-PMD encoder converts the NRZI bit stream received from the PMA sublayer to a 3-level Multi-Level Transition code. The three levels are -1, 0, and +1. The results of MLT-3 encoding provide a reduction in the transmitted energy over the critical frequency range from 20 MHz to 100 MHz. The TP-PMD MLT-3 decoder converts the received three-level signal back to an NRZI bit stream.

6.4.3 100Base-TX Operation: DC Restoration

The ICS1893BF's 100Base-TX operations uses a stream-cipher scrambler to minimize peak amplitudes in the frequency spectrum. However, the nature of the stream cipher and MLT-3 encoding is such that long sequences of consecutive zeros or ones can exist. These unbalanced data patterns produce an undesirable DC component in the data stream known as 'baseline wander'.

Baseline wander adversely affects the noise immunity of the receiver, because the 'baseline' signal moves or 'wanders' from its nominal DC value. The ICS1893BF uses a unique technique to restore the DC component 'lost' by the medium. As a result, the design is very robust, immune to noise and independent of the data stream.

6.4.4 100Base-TX Operation: Adaptive Equalizer

The ICS1893BF has a TP-PMD sublayer that uses adaptive equalization circuitry to compensate for signal amplitude and phase distortion incurred from the transmission medium. At a data rate of 100 Mbps, the transmission medium (that is, the cable) introduces significant signal distortion because of high-frequency attenuation and phase shift. The high-frequency loss occurs primarily because of the cable skin effect that causes the conductor resistance to rise as the square of the frequency rises.

The ICS1893BF has an adaptive equalizer that accurately compensates for these losses in shielded twisted-pair (STP) and unshielded twisted-pair (UTP) cables. The DSP-based adaptive equalizer uses a technique that compensates for a wide range of cable lengths. The optimizing parameter for the equalization process is the overall bit error rate of the ICS1893BF. This technique closes the loop on the entire data reception process and provides a very high overall reliability.

6.4.5 100Base-TX Operation: Twisted-Pair Transmitter

The ICS1893BF uses the same Twisted-Pair Transmit pins (TP_TXP and TP_TXN) for both 10Base-T and 100Base-TX operations. Each twisted-pair transmitter module is a current-driven, differential driver that can supply either of the following:

- A two-level 10Base-T (that is, Manchester-encoded) signal
- A three-level 100Base-TX (that is, MLT-3 encoded) signal

The ICS1893BF interfaces with the medium through an isolation transformer (sometimes referred to as a magnetic module). The ICS1893BF's transmitter uses wave-shaping techniques to control the output signal rise and fall times (thereby eliminating the need for external filters) and interfaces directly to the isolation transformer.

Note:

1. In reference to the ICS1893BF, the term 'Twisted-Pair Transmitter' refers to the set of Twisted-Pair Transmit output pins (TP_TXP and TP_TXN).
2. For information on the 10Base-T Twisted-Pair Transmitter, see Section 6.5.11, "10Base-T Operation: Twisted-Pair Transmitter".

Copyright © 2009, IDT, Inc.
All rights reserved.

6.4.6 100Base-TX Operation: Twisted-Pair Receiver

The ICS1893BF uses the same Twisted-Pair Receive pins (TP_RXP and TP_RXN) for both 10Base-T and 100Base-TX operations. The internal twisted-pair receiver modules interface with the medium through an isolation transformer. The 100Base-TX receiver module accepts and processes a differential three-level 100Base-TX (that is, MLT-3 encoded) signal from the isolation transformer. (In contrast, the 10Base-T receiver module accepts and processes a differential two-level, Manchester- encoded, 10Base-T signal from the isolation transformer).

Note:

1. In reference to the ICS1893BF, the term 'Twisted-Pair Receiver' refers to the set of Twisted-Pair Receive output pins (TP_RXP and TP_RXN).
2. For information on the 10Base-T Twisted-Pair Receiver, see Section 6.5.12, "10Base-T Operation: Twisted-Pair Receiver".

6.4.7 100Base-TX Operation: Isolation Transformer

The ICS1893BF interfaces with a medium through isolation transformers. The PHY requires two isolation transformers: one for its Twisted-Pair Transmitter and the other for its Twisted-Pair Receiver. These isolation transformers provide both physical isolation as well as the means for coupling a signal between the ICS1893BF and the medium for both 10Base-T and 100Base-TX operations.

Note: For information on isolation transformers (also referred to as magnetic modules), see Section 5.3, "Twisted-Pair Interface".

6.5 Functional Block: 10Base-T Operations

When configured for 10Base-T mode, the ICS1893BF MAC Interface is configured to provide 10M MII (Media Independent Interface). The Twisted-Pair Interface is automatically configured to provide a two-level, Manchester-encoded signal at the voltage levels specified in the ISO/IEC standard. (For more information on the Twisted-Pair Interface, see Section 5.3, "Twisted-Pair Interface".)

The 10Base-T and 100Base-TX operations differ as follows. 10Base-T operations are fundamentally simpler than 100Base-TX operations. The data rate is slower, requiring less encoding than 100Base-TX operations. In addition, the bandwidth requirements (and therefore the line attenuation issues) are not as severe as with 100-MHz operations. Consequently, when an ICS1893BF is set for 10Base-T operations, it requires fewer internal circuits in contrast to 100Base-TX operations. (For an overview of 10Base-T operations, see Section 4.6, "10Base-T Operations".).

6.5.1 10Base-T Operation: Manchester Encoder/Decoder

During data transmission the ICS1893BF acquires data from its MAC Interface in 4-bit nibbles. The ICS1893BF converts this data into a Manchester-encoded signal for presentation to its MDI, as required by the ISO/IEC specification.

In a Manchester-encoded signal, all logic:

- Ones are:
  - Positive during the first half of the bit period
  - Negative during the second half of the bit period
- Zeros are:
  - Negative during the first half of the bit period
  - Positive during the second half of the bit period

Copyright © 2009, IDT, Inc.
All rights reserved.

During 10Base-T data reception, a Manchester Decoder translates the serial bit stream obtained from the Twisted-Pair Receiver (MDI) into an NRZ bit stream. The Manchester Decoder then passes the data to the MAC Interface in parallel format.

Manchester-encoded signals have the following advantages:

- Every bit period has an encoded clock.
- The split-phase nature of the signal always provides a zero DC level regardless of the data (that is, there is no baseline wander phenomenon).

The primary disadvantage in using Manchester-encoded signals is that it doubles the data rate, making it operationally prohibitive for 100-MHz operations.

6.5.2 10Base-T Operation: Clock Synthesis

The ICS1893BF synthesizes the clocks required for synchronizing data transmission. In 10Base-T mode, the MAC Interface provides a 10M MII (Media Independent Interface):

- 10M MII interface, the ICS1893BF synthesizes a 2.5-MHz clock for nibble-wide transactions

6.5.3 10Base-T Operation: Clock Recovery

The ICS1893BF recovers its receive clock from the Manchester-encoded data stream obtained from its Twisted-Pair Receiver using a phase-locked loop (PLL). The ICS1893BF then uses this recovered clock for synchronizing data transmission between itself and the MAC. Receive-clock PLL acquisitions begin with reception of the MAC Frame Preamble and continue as long as the ICS1893BF is receiving data.

6.5.4 10Base-T Operation: Idle

An ICS1893BF transmits Normal Link Pulses on its MDI in the absence of data. During this time the link is Idle, and the ICS1893BF periodically transmits link pulses at a rate of one link pulse every 16 ms in compliance with the ISO/IEC 8802-3 standard. In 10Base-T mode, the ICS1893BF continues transmitting link pulses even while receiving data. This situation does not generate a Collision Detect signal (COL) because link pulses indicate an idle state for a link.

6.5.5 10Base-T Operation: Link Monitor

When an ICS1893BF is in 10Base-T mode, its Link Monitor Function observes the data received by the 10Base-T Twisted-Pair Receiver to determine the link status. The results of this continual monitoring are stored in the Link Status bit. The Station Management entity (STA) can access the Link Status bit in either the Status Register (bit 1.2) or the QuickPoll Detailed Status Register (bit 17.0).

When the Link Status bit is:

- Zero, either a valid link is not established or the link is momentarily dropped since either the last read of the Link Status bit or the last reset of the ICS1893BF.
- One, a valid link is established.

The ICS1893BF Link Status bit is a latching low (LL) bit. (For more information on latching high and latching low bits, see Section 7.1.4.1, “Latching High Bits” and Section 7.1.4.2, “Latching Low Bits”.)

The criteria used by the Link Monitor Function to declare a link either valid or invalid depends upon these factors: the present state of the link, whether its Smart Squelch function is enabled, and the incoming data.

Copyright © 2009, IDT, Inc.
All rights reserved.

When the 10Base-T link is:

- Invalid, and the Smart Squelch function is:
  - Disabled (bit 18.0 is logic one), the Link Monitor Function must detect at least one of the following events before transitioning its link from the invalid state to the valid state:
    - More than seven, ISO/IEC-defined, Normal Link Pulses (NLPs)
    - Any valid data
  - Enabled (bit 18.0 is logic zero), the Link Monitor Function must detect at least one of the following events before transitioning its link from the invalid state to the valid state:
    - More than seven, ISO/IEC-defined, Normal Link Pulses (NLPs)
    - Any valid data followed by a valid IDL
- Valid, and the Smart Squelch function is:
  - Disabled (bit 18.0 is logic one), the Link Monitor Function continues to report its link as valid as long as it continues to detect any of the following:
    - ISO/IEC-defined, Normal Link Pulses (NLPs)
    - Any valid data
  - Enabled (bit 18.0 is logic zero), the Link Monitor Function continues to report its link as valid as long as it continues to detect any of the following:
    - ISO/IEC-defined, Normal Link Pulses (NLPs)
    - Any valid data followed by a valid IDL
- Valid, the Link Monitor Function declares the link as invalid if it receives neither data nor NLPs (that is, the link shows either no activity or inconsistent activity) for more than 81 to 83 ms. In this case the Link Monitor Function sets the Link Status bit to logic zero.

Note:

1. An ICS1893BF receives ‘valid data’ when its Twisted-Pair Receiver phase-locked loop can acquire lock and extract the receive clock from the incoming data stream for a minimum of three consecutive bit times.
2. When a link is invalid and the Link Monitor Function detects the presence of data, the ICS1893BF does not transition the link to the valid state until after the reception of the present packet is complete.
3. Enabling or disabling the Smart Squelch Function affects the Link Monitor function.
4. A transition from the invalid state to the valid state does not automatically update the latching-low Link Status bit.

6.5.6 10Base-T Operation: Smart Squelch

The Smart Squelch Function imposes more stringent requirements on the Link Monitor Function regarding the definition of a valid link, thereby providing a level of insurance that spurious noise is not mistaken for a valid link during cable installation.

An STA can control the execution of the ICS1893BF Smart Squelch Function using bit 18.0 (the Smart Squelch Inhibit bit in the 10Base-T Operations Register). When bit 18.0 is logic:

- Zero (the default), an ICS1893BF enables its Smart Squelch Function. In this case, the Link Monitor must confirm the presence of both data and a valid IDL at the end of the packet before declaring a link valid.
- One, an ICS1893BF disables or inhibits its Smart Squelch Function. In this case, the Link Monitor does not have to confirm the presence of an IDL to declare a link valid (that is, the reception of any data is sufficient).

In 10Base-T mode, an ICS1893BF appends an IDL to the end of each packet during data transmission. The receiving PHY (the remote link partner) sees this IDL and removes it from the data stream.

Copyright © 2009, IDT, Inc.
All rights reserved.

6.5.7 10Base-T Operation: Carrier Detection

The ICS1893BF has a 10Base-T Carrier Detection Function that establishes the state of its Carrier Sense signal (CRS), based upon the state of its Transmit and Receive state machines. These functions indicate whether the ICS1893BF is (1) transmitting data, (2) receiving data, or (3) in a collision state (that is, the ICS1893BF is both transmitting and receiving data on its twisted-pair medium, as defined in the ISO/IEC 8802-3 standard). When the ICS1893BF is configured for:

- Half-duplex operations, the ICS1893BF asserts its CRS signal when either transmitting or receiving data.
- Full-duplex operations, the ICS1893BF asserts its CRS signal only when it is receiving data.

6.5.8 10Base-T Operation: Collision Detection

The ICS1893BF has a 10Base-T Collision Detection Function that establishes the state of its Collision Detection signal (COL) based upon both (1) the state of its Receiver state machine and (2) the state of its Transmit state machine. When the ICS1893BF is operating in:

- Half-duplex mode, the ICS1893BF asserts its COL signal to indicate it is receiving data while transmission of data is also in progress.
- Full-duplex mode, the ICS1893BF always sets its COL signal to FALSE.

6.5.9 10Base-T Operation: Jabber

The ICS1893BF has an ISO/IEC compliant Jabber Detection Function that, when enabled, monitors the data stream sent to its Twisted-Pair Transmitter to ensure that it does not exceed the 10Base-T Jabber activation time limit (that is, the maximum transmission time). For more information, see Section 9.5.18, “10Base-T: Jabber Timing”.

When the Jabber Detection Function detects that its transmission time exceeds the maximum Jabber activation time limit and Jabber Detection is enabled, the ICS1893BF asserts its Collision Detect (COL) signal. During this ISO/IEC specified ‘jabber de-activation time’, the ICS1893BF transmit data stream is interrupted and prevented from reaching its Twisted-Pair Transmitter. During this time, when interrupting the data stream and asserting its COL signal, the ICS1893BF transmits Normal Link Pulses and sets its QuickPoll Detailed Status Register’s Jabber Detected bit (bit 17.2) to logic one. This bit is a latching high (LH) bit. (For more information on latching high and latching low bits, see Section 7.1.4.1, “Latching High Bits” and Section 7.1.4.2, “Latching Low Bits”.)

The ICS1893BF provides an STA with the ability to disable the Jabber Detection Function using the Jabber Inhibit bit (bit 18.5 in the 10Base-T Operations Register). Setting bit 18.5 to logic:

- Zero (the default) enables the Jabber Detection Function.
- One disables the Jabber Detection Function.

6.5.10 10Base-T Operation: SQE Test

The ICS1893BF has an ISO/IEC compliant Signal Quality Error (SQE) Test Function used exclusively for 10Base-T operations. When enabled, the ICS1893BF performs the SQE Test at the completion of each transmitted packet (that is, whenever its TX_EN signal transitions from asserted to de-asserted). When the ICS1893BF executes its SQE Test, it asserts the COL signal to its MAC Interface for a pre-determined time duration (ISO/IEC specified). [For more information, see Section 9.5.17, “10Base-T: Heartbeat Timing (SQE)”.]

Copyright © 2009, IDT, Inc.
All rights reserved.

An ICS1893BF SQE Test Function is:

- Enabled only when all the following conditions are true:
  - The ICS1893BF is in node mode.
  - The ICS1893BF is in half-duplex mode.
  - The ICS1893BF has a valid link.
  - The 10Base-T Operations Register's SQE Test Inhibit bit (bit 18.2) is logic zero (the default).
  - The ICS1893BF TX_EN signal has transitioned from asserted (high) to de-asserted (low).
- Disabled whenever any of the following are true:
  - The ICS1893BF is in full-duplex mode.
  - The ICS1893BF detects a link failure.
  - The ICS1893BF SQE Test Inhibit bit (bit 18.2) in the 10Base-T Operations Register is logic one. [This bit provides the Station Management entity (STA) with the ability to disable the SQE Test function.]

Note:

1. In 10Base-T mode, a bit time has a typical duration of 100 ns.
2. The SQE Test also has the name 10Base-T Heartbeat. For details on the SQE waveforms, see Section 9.5.17, "10Base-T: Heartbeat Timing (SQE)".

6.5.11 10Base-T Operation: Twisted-Pair Transmitter

The 10Base-T Twisted-Pair Transmitter is functionally similar to the 100Base-TX Twisted-Pair Transmitter. The primary differences are in the data rate and signaling, as specified in the ISO/IEC specifications. For more information, see Section 6.4.5, "100Base-TX Operation: Twisted-Pair Transmitter".

6.5.12 10Base-T Operation: Twisted-Pair Receiver

The 10Base-T Twisted-Pair Receiver is functionally similar the 100Base-TX Twisted-Pair Receiver. The primary differences are in the data rate and signaling, as specified in the ISO/IEC specifications. For more information, see Section 6.4.6, "100Base-TX Operation: Twisted-Pair Receiver".

6.5.13 10Base-T Operation: Auto Polarity Correction

The ICS1893BF can sense and then automatically correct a signal polarity that is reversed on its Twisted-Pair Receiver inputs. A signal polarity reversal occurs when the input signals on an ICS1893BF's TP_RXP and TP_RXN pins are crossed or swapped (a problem that can occur during network installation or wiring).

The ICS1893BF accomplishes reversed signal polarity detection and correction by examining the signal polarity of the Normal Link Pulses (NLPs). In 10Base-T mode, an ICS1893BF transmits and receives NLPs when its link is in the Idle state. In 100Base-TX mode, an ICS1893BF transmits and receives NLPs during Auto-Negotiation. An STA can control this feature using the 10Base-T Operations Register bit 18.3, the Auto Polarity-Inhibit bit. When this bit is logic:

- Zero, the ICS1893BF automatically senses and corrects a reversed or inverted signal polarity on its Twisted-Pair Receive pins (TP_RXP and TP_RXN).
- One, the ICS1893BF disables this feature.

Copyright © 2009, IDT, Inc.
All rights reserved.

When an ICS1893BF detects a reversed signal polarity on its Twisted-Pair Receiver pins and the Auto Polarity-Inhibit bit is also logic zero (enabled), the ICS1893BF (1) automatically corrects the data stream and (2) sets its Polarity Reversed bit (bit 18.14) to logic one, to indicate to the STA that this situation exists. Bit 18.14 is a latching high (LH) bit. (For more information on latching high and latching low bits, see Section 7.1.4.1, "Latching High Bits" and Section 7.1.4.2, "Latching Low Bits".)

Note: ***The ICS1893BF will not complete the Auto-MDIX function for an inverted polarity cable. This is a rare event with modern manufactured cables. Full Auto-Negotiation and Auto Polarity Correction will complete when the Auto-MDIX function is disabled. Software control for the Auto-MDIX function is available in MDIO Register 19 Bits 9:8.***

6.5.14 10Base-T Operation: Isolation Transformer

The 10Base-T Isolation Transformer operates the same as the 100Base-TX Isolation Transformer. In fact, in a typical ICS1893BF application they are the same unit. For more information, see Section 6.4.7, "100Base-TX Operation: Isolation Transformer".

6.6 Functional Block: Management Interface

As part of the MAC Interface, the ICS1893BF provides a two-wire serial management interface which complies with the ISO/IEC 8802-3 standard MII Serial Management Interface. This interface is used to exchange control, status, and configuration information between a Station Management entity (STA) and the physical layer device (PHY). The PHY and STA exchange this data through a pre-defined set of management registers. The ISO/IEC standard specifies the following components of this serial management interface:

- A set of registers (Section 6.6.1, "Management Register Set Summary")
- The frame structure (Section 6.6.2, "Management Frame Structure")
- The protocol

In compliance with the ISO/IEC specification, the ICS1893BF implementation of the serial management interface provides a bi-directional data pin (MDIO) along with a clock (MDC) for synchronizing the exchange of data. These pins remain active in all ICS1893BF MAC Interface modes (that is, the 10/100 MII, 100M Symbol, and 10M Serial interface modes).

6.6.1 Management Register Set Summary

The ICS1893BF implements a Management Register set that adheres to the ISO/IEC standard. This register set (discussed in detail in Chapter 7, "Management Register Set") includes the mandatory 'Basic' Control and Status registers and the ISO/IEC 'Extended' registers as well as some ICS-specific registers.

6.6.2 Management Frame Structure

The Serial Management Interface is a synchronous, bi-directional, two-wire, serial interface for the exchange of configuration, control, and status data between a PHY, such as an ICS1893BF, and an STA. All data transferred on an MDIO signal is synchronized by its MDC signal. The PHY and STA exchange data through a pre-defined register set.

The ICS1893BF complies with the ISO/IEC defined Management Frame Structure and protocol. This structure supports both read and write operations. Table 6-1 summarizes the Management Frame Structure.

Copyright © 2009, IDT, Inc.
All rights reserved.

Note: The Management Frame Structure starts from and returns to an IDLE condition. However, the IDLE periods are not part of the Management Frame Structure.

Table 6-1. Management Frame Structure Summary

Frame Field		Data	Comment
Acronym	**Frame Function**		
PRE	Preamble (Bit 1.6)	11..11	32 ones
SFD	Start of Frame	01	2 bits
OP	Operation Code	10/01 (read/write)	2 bits
PHYAD	PHY Address (Bits 16.10:6)	AAAAA	5 bits
REGAD	Register Address	RRRRR	5 bits
TA	Turnaround	Z0/10 (read/write)	2 bits
DATA	Data	DDD..DD	16 bits

6.6.2.1 Management Frame Preamble

The ICS1893BF continually monitors its serial management interface for either valid data or a Management Frame (MF) Preamble, based upon the setting of the MF Preamble Suppression bit, 1.6. When the MF Preamble Suppression is disabled, an ICS1893BF waits for a MF Preamble which indicates the start of an STA transaction. A Management Frame Preamble is a pattern of 32 contiguous logic one bits on the MDIO pin, along with 32 corresponding clock cycles on the MDC pin.

The ICS1893BF supports the Management Frame (MF) Preamble Suppression capability on its Management Interface, thereby providing a method to shorten the Management Frame and provide an STA with faster access to the Management Registers.

The ability to process Management Frames that do not have a preamble is provided by the Management Frame Preamble Suppression bit, (bit 1.6 in the ICS1893BF's Status Register). This is an ISO/IEC defined status bit that is intended to provide an indication of whether or not a PHY supports the MF Preamble Suppression feature. In order to maintain backward compatibility with the ICS1890, which did not support MF Preamble Suppression, the ICS1893BF MF Preamble Suppression bit is a Command Override Write bit which defaults to a logic zero. An STA can enable MF Preamble Suppression by writing a logic one to bit 1.6 subsequent to a write of logic one to the Command Override bit, 16.15. For an explanation of the Command Override Write bits, see Section 7.1.2, "Management Register Bit Access".

6.6.2.2 Management Frame Start

A valid Management Frame includes a start-of-frame delimiter, SFD, immediately following the preamble. The SFD bit pattern is 01b and is synchronous with two clock cycles on the MDC pin.

6.6.2.3 Management Frame Operation Code

A valid Management Frame includes an operation code (OP) immediately following the start-of-frame delimiter. There are two valid operation codes: one for reading from a management register, 10b, and one for writing to a management register, 01b. The ICS1893BF does not respond to the codes 00b and 11b, which the ISO/IEC specification defines as invalid.

6.6.2.4 Management Frame PHY Address

The two-wire, Serial Management Interface is specified to allow busing (that is, the sharing of the two wires among multiple PHYs). The Management Frame includes a 5-bit PHY Address field, PHYAD, allowing for 32 unique addresses. An STA uniquely identifies each of the PHYs that share a single serial management interface by using this 5-bit PHY Address field, PHYAD.

Copyright © 2009, IDT, Inc.
All rights reserved.

Upon receiving a valid STA transaction, during a power-on or hardware reset an ICS1893BF compares the PHYAD field included within the management frame with the value of its PHYAD bits stored in register 16. (For information on the PHYAD bits, see Table 7-16.) An ICS1893BF responds to all transactions that match its stored address bits.

6.6.2.5 Management Frame Register Address

A Management Frame includes a 5-bit register address field, REGAD. This field identifies which of the 32 Management Registers are involved in a transaction between an STA and a PHY.

6.6.2.6 Management Frame Operational Code

A management frame includes a 2-bit operational code field, OP. If the operation code is a:

- Read, the REGAD field identifies the register used as the source of data returned to the STA by the ICS1893BF.
- Write, the REGAD identifies the destination register that is to receive the data sent by the STA to the ICS1893BF.

6.6.2.7 Management Frame Turnaround

A valid management frame includes a turn-around field (TA), which is a 2-bit time space between the REGAD field and the Data field. This time allows an ICS1893BF and an STA to avoid contentions during read transactions. During an operation that is a:

- Read, an ICS1893BF remains in the high-impedance state during the first bit time and subsequently drives its MDIO pin to logic zero for the second bit time.
- Write, an ICS1893BF waits while the STA transmits a logic one, followed by a logic zero on its MDIO pin.

6.6.2.8 Management Frame Data

A valid management frame includes a 16-bit Data field for exchanging the register contents between the ICS1893BF and the STA. All Management Registers are 16 bits wide, matching the width of the Data field. During a transaction that is a:

- Read, (OP is 10b) the ICS1893BF obtains the contents of the register identified in the REGAD field and returns this Data to the STA synchronously with its MDC signal.
- Write, (OP is 01b) the ICS1893BF stores the value of the Data field in the register identified in the REGAD field.

If the STA attempts to:

- Read from a non-existent ICS1893BF register, the ICS1893BF returns logic one for all bits in the Data field, FFFFh.
- Write to a non-existent ICS1893BF register, the ICS1893BF isolates the Data field of the management frame from every reaching the registers.

Note: The first Data bit transmitted and received is the most-significant bit of a Management Register, bit X.15.

6.6.2.9 Serial Management Interface Idle State

The MDIO signal is in an idle state during the time between STA transactions. When the Serial Management Interface is in the idle state, the ICS1893BF disables (that is, tri-states) its MDIO pin, which enters a high-impedance state. The ISO/IEC 8802-3 standard requires that an MDIO signal be idle for at least one bit time between management transactions. However, the ICS1893BF does not have this limitation and can support a continual bit stream on its MDIO signals.

Copyright © 2009, IDT, Inc.
All rights reserved.

Chapter 7 Management Register Set

The tables in this chapter detail the functionality of the bits in the management register set. The tables include the register locations, the bit positions, the bit definitions, the STA Read/Write Access Types, the default bit values, and any special bit functions or capabilities (such as self-clearing). Following each table is a description of each bit. This chapter includes the following sections:

- Section 7.1, “Introduction to Management Register Set”
- Section 7.2, “Register 0: Control Register”
- Section 7.3, “Register 1: Status Register”
- Section 7.4, “Register 2: PHY Identifier Register”
- Section 7.5, “Register 3: PHY Identifier Register”
- Section 7.6, “Register 4: Auto-Negotiation Register”
- Section 7.7, “Register 5: Auto-Negotiation Link Partner Ability Register”
- Section 7.8, “Register 6: Auto-Negotiation Expansion Register”
- Section 7.9, “Register 7: Auto-Negotiation Next Page Transmit Register”
- Section 7.10, “Register 8: Auto-Negotiation Next Page Link Partner Ability Register”
- Section 7.11, “Register 16: Extended Control Register”
- Section 7.12, “Register 17: Quick Poll Detailed Status Register”
- Section 7.13, “Register 18: 10Base-T Operations Register”
- Section 7.14, “Register 19: Extended Control Register 2”

Copyright © 2009, IDT, Inc.
All rights reserved.

7.1 Introduction to Management Register Set

This section explains in general terms the Management Register set discussed in this chapter. (For a summary of the Management Register set, see Section 6.6.1, “Management Register Set Summary”.)

7.1.1 Management Register Set Outline

This section outlines the ICS1893BF Management Register set. Table 7-1 lists the ISO/IEC-specified Management Register Set that the ICS1893BF implements.

Table 7-1. ISO/IEC-Specified Management Register Set

Register Address	Register Name	Basic / Extended
0	Control	Basic
1	Status	Basic
2,3	PHY Identifier	Extended
4	Auto-Negotiation Advertisement	Extended
5	Auto-Negotiation Link Partner Ability	Extended
6	Auto-Negotiation Expansion	Extended
7	Auto-Negotiation Next Page Transmit	Extended
8	Auto-Negotiation Next Page Link Partner Ability	Extended
9 through 15	Reserved by IEEE	Extended
16 through 31	Vendor-Specific (IDT) Registers	Extended

Table 7-2 lists the IDT-specific registers that the ICS1893BF implements. These registers enhance the performance of the ICS1893BF and provide the Station Management entity (STA) with additional control and status capabilities.

Table 7-2. IDT-Specific Registers

Register Address	Register Name	Basic / Extended
16	Extended Control	Extended
17	QuickPoll Detailed Status	Extended
18	10Base-T Operations	Extended
19	Extended Control 2	Extended
20 through 31	Reserved by IDT	Extended

Copyright © 2009, IDT, Inc.
All rights reserved.

7.1.2 Management Register Bit Access

The ICS1893BF Management Registers include one or more of the following types of bits:

Table 7-3. Description of Management Register Bit Types

Management Register Bit Types	Bit Symbol	Description
Read-Only	RO	An STA can obtain the value of a RO register bit. However, it cannot alter the value of (that is, it cannot write to) an RO register bit. The ICS1893BF isolates any STA attempt to write a value to an RO bit.
Command Override Write	CW	An STA can read a value from a CW register bit. However, write operations are conditional, based on the value of the Command Register Override bit (bit 16.15). When bit 16.15 is logic: • Zero (the default), the ICS1893BF isolates STA attempts to write to the CW bits (that is, CW bits cannot be altered when bit 16.15 is logic zero). • One, the ICS1893BF permits an STA to alter the value of the CW bits in the subsequent register write. (Bit 16.15 is self-clearing and automatically clears to zero on the subsequent write.)
Read/Write	R/W	An STA can unconditionally read from or write to a R/W register bit.
Read/Write Zero	R/W0	An STA can unconditionally read from a R/W0 register bit, but only a ‘0’ value can be written to this bit.

7.1.3 Management Register Bit Default Values

The tables in this chapter specify for each register bit the default value, if one exists. The ICS1893BF sets all Management Register bits to their default values after a reset. Table 7-4 lists the valid default values for ICS1893BF Management Register bits.

Table 7-4. Range of Possible Valid Default Values for ICS1893BF Register Bits

Default Condition	Default Value
–	Indicates there is no default value for the bit
0	Indicates the bit’s default value is logic zero
1	Indicates the bit’s default value is logic one
State of pin at reset	For some bits, the default value depends on the state (that is, the logic value) of a particular pin at reset (that is, the logic value of a pin is latched at reset). An example of pins that have a default condition that depends on the state of the pin at reset are the PHY / LED pins (P0AC, P1CL, P2LI, P3TD, and P4RD) discussed in the following sections: • Section 5.5, “Status Interface” • Section 7.11, “Register 16: Extended Control Register” • Section 8.2.2, “Multi-Function (Multiplexed) Pins: PHY Address and LED Pins”

Note: The ICS1893BF has a number of reserved bits throughout the Management Registers. Most of these bits provide enhanced test modes. The Management Register tables provide the default values for these bits. The STA must not change the value of these bits under any circumstance. If the STA inadvertently changes the default values of these reserved register bits, normal operation of the ICS1893BF can be affected.

Copyright © 2009, IDT, Inc.
All rights reserved.

7.1.4 Management Register Bit Special Functions

This section discusses the types of special functions for the Management Register bits.

7.1.4.1 Latching High Bits

The purpose of a latching high (LH) bit is to record an event. An LH bit records an event by monitoring an active-high signal and then latching this active-high signal when it triggers (that is, when the event occurs).

A latching high bit, once set to logic one, remains set until either a reset occurs or it is read by an STA. Immediately following an STA read of an LH bit, the ICS1893BF latches the current state of the signal into the LH bit. When an STA reads an LH bit:

- Once, the LL bit provides the STA with a history of whether or not the event has ever occurred. That is, this first read provides the STA with a history of the condition and latches the current state of the signal into the LL bit for the next read.
- Twice in succession, the LH bit provides the STA with the current state of the monitored signal.

7.1.4.2 Latching Low Bits

As with latching high bits, the purpose of a latching low (LL) bit is also to record an event. An LL bit records an event by monitoring an active-low signal and then latching this active-low signal when it triggers (that is, when the event occurs).

A latching low bit, once cleared to logic zero, remains cleared until either a reset occurs or it is read by an STA. Immediately following an STA read of an LL bit, the ICS1893BF latches the current state of the active-low signal into the LL bit. When an STA reads an LL bit:

- Once, the LL bit provides the STA with a history of whether or not the event has ever occurred. That is, this first read provides the STA with a history of the condition and latches the current state of the signal into the LL bit for the next read.
- Twice in succession, the LL bit provides the STA with the current state of the monitored signal.

7.1.4.3 Latching Maximum Bits

For the ICS1893BF, the purpose of latching maximum (LMX) bits is to track the progress of internal state machines. The LMX bits act in combination with other LMX bits to save the maximum collective value of a defined group of LMX bits, from the most-significant bit to the least-significant bit.

For example, assume a group of LMX bits is defined as register bits 13 through 11. If these bits first have a value of 3o (octal) and then the state machine they are monitoring advances to state:

- 2o, then the 2o value does not get latched.
- 4o (or any other value greater than 3o), then in this case, the value of 4o does get latched.

LMX bits retain their value until either a reset occurs or they are read by an STA. Immediately following an STA read of a defined group of LMX bits, the ICS1893BF latches the current state of the monitored state machine into the LMX bits. When an STA reads a group of LMX bits:

- Once, the LMX bits provide the STA with a history of the maximum value that the state machine has achieved and latches the current state of the state machine into the LMX bits for the next read.
- Twice in succession, the LMX bits provide the STA with the current state of the monitored state machine.

7.1.4.4 Self-Clearing Bits

Self-clearing (SC) bits automatically clear themselves to logic zero after a pre-determined amount of time without any further STA access. The SC bits have a default value of logic zero and are triggers to begin execution of a function. When the STA writes a logic one to an SC bit, the ICS1893BF begins executing the function assigned to that bit. After the ICS1893BF completes executing the function, it clears the bit to indicate that the action is complete.

Copyright © 2009, IDT, Inc.
All rights reserved.

7.2 Register 0: Control Register

Table 7-5 lists the bits for the Control Register, a 16-bit register used to establish the basic operating modes of the ICS1893BF.

- The Control Register is accessible through the MII Management Interface.
- Its operation is independent of the MAC Interface configuration.
- It is fully compliant with the ISO/IEC Control Register definition.

Note: For an explanation of acronyms used in Table 7-5, see Chapter 1, "Abbreviations and Acronyms".

Table 7-5. Control Register (Register 0 [0x00]

Bit	Definition	When Bit = 0	When Bit = 1	Access	SF	Default	Hex
0.15	Reset	No effect	ICS1893BF enters Reset mode	R/W	SC	0	3
0.14	Loopback enable	Disable Loopback mode	Enable Loopback mode	R/W	–	0	
0.13	Data rate select	10 Mbps operation	100 Mbps operation	R/W	–	1	
0.12	Auto-Negotiation enable	Disable Auto-Negotiation	Enable Auto-Negotiation	R/W	–	1	
0.11	Low-power mode	Normal power mode	Low-power mode	R/W	–	0	0/4†
0.10	Isolate	No effect	Isolate ICS1893BF from MII	R/W	–	0/1†	
0.9	Auto-Negotiation restart	No effect	Restart Auto-Negotiation	R/W	SC	0	
0.8	Duplex mode	Half-duplex operation	Full-duplex operation	R/W	–	0	
0.7	Collision test	No effect	Enable collision test	R/W	–	0	0
0.6	IEEE reserved	Always 0	N/A	RO	–	0‡	
0.5	IEEE reserved	Always 0	N/A	RO	–	0‡	
0.4	IEEE reserved	Always 0	N/A	RO	–	0‡	
0.3	IEEE reserved	Always 0	N/A	RO	–	0‡	0
0.2	IEEE reserved	Always 0	N/A	RO	–	0‡	
0.1	IEEE reserved	Always 0	N/A	RO	–	0‡	
0.0	IEEE reserved	Always 0	N/A	RO	–	0‡	

† Whenever the PHY address of Table 7-16:

- Is equal to 00000 (binary), the Isolate bit 0.10 is logic one.
- Is not equal to 00000, the Isolate bit 0.10 is logic zero.

‡ As per the IEEE Std 802.3u, during any write operation to any bit in this register, the STA must write the default value to all Reserved bits.

7.2.1 Reset (bit 0.15)

This bit controls the software reset function. Setting this bit to logic one initiates an ICS1893BF software reset during which all Management Registers are set to their default values and all internal state machines are set to their idle state. For a detailed description of the software reset process, see Section 4.1.2.3, "Software Reset".

During reset, the ICS1893BF leaves bit 0.15 set to logic one and isolates all STA management register accesses. However, the reset process is not complete until bit 0.15 (a Self-Clearing bit), is set to logic zero, which indicates the reset process is terminated.

Copyright © 2009, IDT, Inc.
All rights reserved.

7.2.2 Loopback Enable (bit 0.14)

This bit controls the Loopback mode for the ICS1893BF. Setting this bit to logic:

- Zero disables the Loopback mode.
- One enables the Loopback mode by disabling the Twisted-Pair Transmitter, the Twisted-Pair Receiver, and the collision detection circuitry. (The STA can override the ICS1893BF from disabling the collision detection circuitry in Loopback mode by writing logic one to bit 0.7.) When the ICS1893BF is in Loopback mode, the data presented at the MAC transmit interface is internally looped back to the MAC receive interface. The delay from the assertion of Transmit Data Enable (TXEN) to the assertion of Receive Data valid (RXDV) is less than 512 bit times.

7.2.3 Data Rate Select (bit 0.13)

This bit provides a means of controlling the ICS1893BF data rate. Its operation depends on the state of several other functions, including the HW/SW input pin and the Auto-Negotiation Enable bit (bit 0.12). When the ICS1893BF is configured for:

- Hardware mode (that is, the HW/SW pin is logic zero), the ICS1893BF isolates this bit 0.13 and uses the 10/100SEL input pin to establish the data rate for the ICS1893BF. In this Hardware mode:
  - Bit 0.13 is undefined.
  - The ICS1893BF provides a Data Rate Status bit (in the QuickPoll Detailed Status Register, bit 17.15), which always shows the setting of an active link.
- Software mode (that is, the HW/SW pin is logic one), the function of bit 0.13 depends on the Auto-Negotiation Enable bit 0.12. When the Auto-Negotiation sublayer is:
  - Enabled, the ICS1893BF isolates bit 0.13 and relies on the results of the auto-negotiation process to establish the data rate.
  - Disabled, bit 0.13 determines the data rate. In this case, setting bit 0.13 to logic:
    - Zero selects 10-Mbps ICS1893BF operations.
    - One selects 100-Mbps ICS1893BF operations.

7.2.4 Auto-Negotiation Enable (bit 0.12)

This bit provides a means of controlling the ICS1893BF Auto-Negotiation sublayer. Its operation depends on the HW/SW input pin.

When the ICS1893BF is configured for:

- Hardware mode, (that is, the HW/SW pin is logic zero), the ICS1893BF isolates bit 0.12 and uses the ANSEL (Auto-Negotiation Select) input pin to determine whether to enable the Auto-Negotiation sublayer.

  Note: In Hardware mode, bit 0.12 is undefined.
- Software mode, (that is, the HW/SW pin is logic one), bit 0.12 determines whether to enable the Auto-Negotiation sublayer. When bit 0.12 is logic:
  - Zero:
    - The ICS1893BF disables the Auto-Negotiation sublayer.
    - The ICS1893BF bit 0.13 (the Data Rate bit) and bit 0.8 (the Duplex Mode bit) determine the data rate and the duplex mode.
  - One:
    - The ICS1893BF enables the Auto-Negotiation sublayer.
    - The ICS1893BF isolates bit 0.13 and bit 0.8.

Copyright © 2009, IDT, Inc.
All rights reserved.

7.2.5 Low Power Mode (bit 0.11)

This bit provides one way to control the ICS1893BF low-power mode function. When bit 0.11 is logic:

- Zero, there is no impact to ICS1893BF operations.
- One, the ICS1893BF enters the low-power mode. In this case, the ICS1893BF disables all internal functions and drives all MAC output pins low except for those that support the MII Serial Management Port. In addition, the ICS1893BF internally activates the TPTRI function to tri-state the signals on the Twisted-Pair Transmit pins (TP_TXP and TP_TXN) and achieve additional power savings.

Note: There are two ways the ICS1893BF can enter low-power mode. When entering low-power mode:

- By setting bit 0.11 to logic one, the ICS1893BF maintains the value of all Management Register bits except the latching high (LH) and latching low (LL) status bits, which are re-initialized to their default values instead. (For more information on latching high and latching low bits, see Section 7.1.4.1, “Latching High Bits” and Section 7.1.4.2, “Latching Low Bits”.)
- During a reset, the ICS1893BF sets all management register bits to their default values.

7.2.6 Isolate (bit 0.10)

This bit controls the ICS1893BF Isolate function. When bit 0.10 is logic:

- Zero, there is no impact to ICS1893BF operations.
- One, the ICS1893BF electrically isolates its data paths from the MAC Interface. The ICS1893BF places all MAC output signals (TXCLK, RXCLK, RXDV, RXER, RXD[3:0], COL, and CRS) in a high-impedance state and it isolates all MAC input signals (TXD[3:0], TXEN, and TXER). In this mode, the Serial Management Interface continues to operate normally (that is, bit 0.10 does not affect the Management Interface).

The default value for bit 0.10 depends upon the PHY address of Table 7-16. If the PHY address:

- Is equal to 00000b, then the default value of bit 0.10 is logic one, and the ICS1893BF isolates itself from the MAC Interface.
- Is not equal to 00000b, then the default value of bit 0.10 is logic zero, and the ICS1893BF does not isolate its MAC Interface.

7.2.7 Restart Auto-Negotiation (bit 0.9)

This bit allows an STA to restart the auto-negotiation process in Software mode (that is, the HW/SW pin is logic one). When bit 0.12 is logic:

- Zero, the Auto-Negotiation sublayer is disabled, and the ICS1893BF isolates any attempt by the STA to set bit 0.9 to logic one.
- One (as set by an STA), the ICS1893BF restarts the auto-negotiation process. Once the auto-negotiation process begins, the ICS1893BF automatically sets this bit to logic zero, thereby providing the self-clearing feature.

Copyright © 2009, IDT, Inc.
All rights reserved.

7.2.8 Duplex Mode (bit 0.8)

This bit provides a means of controlling the ICS1893BF Duplex Mode. Its operation depends on several other functions, including the HW/SW input pin and the Auto-Negotiation Enable bit (bit 0.12). When the ICS1893BF is configured for:

- Hardware mode (that is, the HW/SW pin is logic zero), the ICS1893BF isolates bit 0.8 and uses the DPXSEL input pin to establish the Duplex mode for the ICS1893BF. In this Hardware mode:
  - Bit 0.8 is undefined.
  - The ICS1893BF provides a Duplex Mode Status bit (in the QuickPoll Detailed Status Register, bit 17.14), which always shows the setting of an active link.
- Software mode (that is, the HW/SW pin is logic one), the function of bit 0.8 depends on the Auto-Negotiation Enable bit, 0.12. When the auto-negotiation process is:
  - Enabled, the ICS1893BF isolates bit 0.8 and relies upon the results of the auto-negotiation process to establish the duplex mode.
  - Disabled, bit 0.8 determines the Duplex mode. Setting bit 0.8 to logic:
    - Zero selects half-duplex operations.
    - One selects full-duplex operations. (When the ICS1893BF is operating in Loopback mode, it isolates bit 0.8, which has no effect on the operation of the ICS1893BF.)

7.2.9 Collision Test (bit 0.7)

This bit controls the ICS1893BF Collision Test function. When an STA sets bit 0.7 to logic:

- Zero, the ICS1893BF disables the collision detection circuitry for the Collision Test function. In this case, the COL signal does not track the TXEN signal. (The default value for this bit is logic zero, that is, disabled.)
- One, as per the ISO/IEE 8802-3 standard, clause 22.2.4.1.9, the ICS1893BF enables the collision detection circuitry for the Collision Test function, even if the ICS1893BF is in Loopback mode (that is, bit 0.14 is set to 1). In this case, the Collision Test function tracks the Collision Detect signal (COL) in response to the TXEN signal. The ICS1893BF asserts the Collision signal (COL) within 512 bit times of receiving an asserted TXEN signal, and it de-asserts COL within 4 bit times of the de-assertion of the TXEN signal.

7.2.10 IEEE Reserved Bits (bits 0.6:0)

The IEEE reserves these bits for future use. When an STA:

- Reads a reserved bit, the ICS1893BF returns a logic zero.
- Writes to a reserved bit, it must use the default value specified in this data sheet.

The ICS1893BF uses some reserved bits to invoke auxiliary functions. To ensure proper operation of the ICS1893BF, an STA must maintain the default value of these bits. Therefore, ICS recommends that during any STA write operation, an STA write the default value to all reserved bits, even those bits that are Read Only.

Copyright © 2009, IDT, Inc.
All rights reserved.

7.3 Register 1: Status Register

Table 7-6 lists the Status Register bits. These 16 bits of data provide an interface between the ICS1893BF and an STA. There are two types of status bits: some report the capabilities of the port, and some indicate the state of signals used to monitor internal circuits.

The STA accesses the Status Register using the Serial Management Interface. During a reset, the ICS1893BF initializes the Status Register bits to pre-defined, default values.

Note: For an explanation of acronyms used in Table 7-5, see Chapter 1, "Abbreviations and Acronyms".

Table 7-6. Status Register (Register 1 [0x01])

Bit	Definition	When Bit = 0	When Bit = 1	Access	SF	Default	Hex
1.15	100Base-T4	Always 0. (Not supported.)	N/A	RO	–	0	7
1.14	100Base-TX full duplex	Mode not supported	Mode supported	CW	–	1	
1.13	100Base-TX half duplex	Mode not supported	Mode supported	CW	–	1	
1.12	10Base-T full duplex	Mode not supported	Mode supported	CW	–	1	
1.11	10Base-T half duplex	Mode not supported	Mode supported	CW	–	1	8
1.10	IEEE reserved	Always 0	N/A	CW	–	0†	
1.9	IEEE reserved	Always 0	N/A	CW	–	0†	
1.8	IEEE reserved	Always 0	N/A	CW	–	0†	
1.7	IEEE reserved	Always 0	N/A	CW	–	0†	0
1.6	MF Preamble suppression	PHY requires MF Preambles	PHY does not require MF Preambles	RO	–	0	
1.5	Auto-Negotiation complete	Auto-Negotiation is in process, if enabled	Auto-Negotiation is completed	RO	LH	0	
1.4	Remote fault	No remote fault detected	Remote fault detected	RO	LH	0	
1.3	Auto-Negotiation ability	N/A	Always 1: PHY has Auto-Negotiation ability	RO	–	1	9
1.2	Link status	Link is invalid/down	Link is valid/established	RO	LL	0	
1.1	Jabber detect	No jabber condition	Jabber condition detected	RO	LH	0	
1.0	Extended capability	N/A	Always 1: PHY has extended capabilities	RO	–	1	

† As per the IEEE Std 802.3u, during any write operation to any bit in this register, the STA must write the default value to all Reserved bits.

7.3.1 100Base-T4 (bit 1.15)

The STA reads this bit to learn if the ICS1893BF can support 100Base-T4 operations. Bit 1.15 of the ICS1893BF is permanently set to logic zero, which informs an STA that the ICS1893BF cannot support 100Base-T4 operations.

Copyright © 2009, IDT, Inc.
All rights reserved.

7.3.2 100Base-TX Full Duplex (bit 1.14)

The STA reads this bit to learn if the ICS1893BF can support 100Base-TX, full-duplex operations. The ISO/IEC specification requires that the ICS1893BF must set bit 1.14 to logic:

- Zero if it cannot support 100Base-TX, full-duplex operations.
- One if it can support 100Base-TX, full-duplex operations. (For the ICS1893BF, the default value of bit 1.14 is logic one, in that the ICS1893BF supports 100Base-TX, full-duplex operations.)

Bit 1.14 is a Command Override Write bit, which allows an STA to alter the default value of this bit. [See the description of bit 16.15, the Command Override Write Enable bit, in Section 7.11, "Register 16: Extended Control Register".]

7.3.3 100Base-TX Half Duplex (bit 1.13)

The STA reads this bit to learn if the ICS1893BF can support 100Base-TX, half-duplex operations. The ISO/IEC specification requires that the ICS1893BF must set bit 1.13 to logic:

- Zero if it cannot support 100Base-TX, half-duplex operations.
- One if it can support 100Base-TX, half-duplex operations. (For the ICS1893BF, the default value of bit 1.13 is logic one. Therefore, when an STA reads the Status Register, the STA is informed that the ICS1893BF supports 100Base-TX, half-duplex operations.)

This bit 1.13 is a Command Override Write bit, which allows an STA to alter the default value of this bit. [See the description of bit 16.15, the Command Override Write Enable bit, in Section 7.11, "Register 16: Extended Control Register".]

7.3.4 10Base-T Full Duplex (bit 1.12)

The STA reads this bit to learn if the ICS1893BF can support 10Base-T, full-duplex operations. The ISO/IEC specification requires that the ICS1893BF must set bit 1.12 to logic:

- Zero if it cannot support 10Base-T, full-duplex operations.
- One if it can support 10Base-T, full-duplex operations. (For the ICS1893BF, the default value of bit 1.12 is logic one. Therefore, when an STA reads the Status Register, the STA is informed that the ICS1893BF supports 10Base-T, full-duplex operations.)

This bit 1.12 is a Command Override Write bit, which allows an STA to alter the default value of this bit. [See the description of bit 16.15, the Command Override Write Enable bit, in Section 7.11, "Register 16: Extended Control Register".]

7.3.5 10Base-T Half Duplex (bit 1.11)

The STA reads this bit to learn if the ICS1893BF can support 10Base-T, half-duplex operations. The ISO/IEC specification requires that the ICS1893BF must set bit 1.11 to logic:

- Zero if it cannot support 10Base-T, half-duplex operations.
- One if it can support 10Base-T, half-duplex operations. (For the ICS1893BF, the default value of bit 1.11 is logic one. Therefore, when an STA reads the Status Register, the STA is informed that the ICS1893BF supports 10Base-T, half-duplex operations.)

Bit 1.11 of the ICS1893BF Status Register is a Command Override Write bit., which allows an STA to alter the default value of this bit. [See the description of bit 16.15, the Command Override Write Enable bit, in Section 7.11, "Register 16: Extended Control Register".]

Copyright © 2009, IDT, Inc.
All rights reserved.

7.3.6 IEEE Reserved Bits (bits 1.10:7)

The IEEE reserves these bits for future use. When an STA:

- Reads a reserved bit, the ICS1893BF returns a logic zero.
- Writes a reserved bit, the STA must use the default value specified in this data sheet.

Both the ISO/IEC standard and the ICS1893BF reserve the use of some Management Register bits. ICS uses some reserved bits to invoke ICS1893BF test functions. To ensure proper operation of the ICS1893BF, an STA must maintain the default value of these bits. Therefore, ICS recommends that an STA write the default value to all reserved bits during all Management Register write operations.

Reserved bits 1.10:7 are Command Override Write (CW) bits. When bit 16.15, the Command Register Override bit, is logic:

- Zero, the ICS1893BF prevents all STA writes to CW bits.
- One, an STA can modify the value of these bits.

7.3.7 MF Preamble Suppression (bit 1.6)

Status Register bit 1.6 is the Management Frame (MF) Preamble Suppression bit. The ICS1893BF sets bit 1.6 to inform the STA of its ability to receive frames that do not have a preamble. When this bit is logic:

- Zero, the ICS1893BF is indicating it cannot accept frames with a suppressed preamble.
- One, the ICS1893BF is indicating it can accept frames that do not have a preamble.

Although the ICS1893BF supports Management Frame Preamble Suppression, its default value for bit 1.6 is logic zero. This default value ensures that bit 1.6 is backward compatible with the ICS1890, which does not have this capability. As the means of enabling this feature, the ICS1893BF implements bit 1.6 as a Command Override Write bit, instead of as a Read-Only bit as in the ICS1890. An STA uses the bit 1.6 to enable MF Preamble Suppression in the ICS1893BF. [See the description of bit 16.15, the Command Override Write Enable bit, in Section 7.11, “Register 16: Extended Control Register”.]

7.3.8 Auto-Negotiation Complete (bit 1.5)

An STA reads bit 1.5 to determine the state of the ICS1893BF auto-negotiation process. The ICS1893BF sets the value of this bit using two criteria. When its Auto-Negotiation sublayer is:

- Disabled, the ICS1893BF sets bit 1.5 to logic zero.
- Enabled, the ICS1893BF sets bit 1.5 to a value based on the state of the Auto-Negotiation State Machine. In this case, it sets bit 1.5 to logic one only upon completion of the auto-negotiation process. This setting indicates to the STA that a link is arbitrated and the contents of Management Registers 4, 5, and 6 are valid. For details on the auto-negotiation process, see Section 6.2, “Functional Block: Auto-Negotiation”.

Bit 1.5 is a latching high (LH) bit. (For more information on latching high and latching low bits, see Section 7.1.4.1, “Latching High Bits” and Section 7.1.4.2, “Latching Low Bits”.)

Note: An Auto-Negotiation Restart does not clear an LH bit. However, performing two consecutive reads of this register provides the present state of the bit.

Copyright © 2009, IDT, Inc.
All rights reserved.

7.3.9 Remote Fault (bit 1.4)

An STA reads bit 1.4 to determine if a Remote Fault exists. The ICS1893BF sets bit 1.4 based on the Remote Fault bit received from its remote link partner. The ICS1893BF receives the Remote Fault bit as part of the Link Code Word exchanged during the auto-negotiation process. If the ICS1893BF receives a Link Code Word from its remote link partner and the Remote Fault bit is set to:

- Zero, then the ICS1893BF sets bit 1.4 to logic zero.
- One, then the ICS1893BF sets bit 1.4 to logic one. In this case, the remote link partner is reporting the detection of a fault, which typically occurs when the remote link partner is having a problem with its receive channel.

Bit 1.4 is a latching high status bit. (For more information on latching high and latching low bits, see Section 7.1.4.1, “Latching High Bits” and Section 7.1.4.2, “Latching Low Bits”.)

Note: The ICS1893BF has two versions of the Remote Fault bit.

- One version of the Remote Fault bit is a latching high version. An STA can access this version through either Management Register 1 (bit 1.4) or 17 (bit 17.1). This bit 1.4/17.1 is cleared when an STA reads either of these registers. (Bit 1.4 is identical to bit 17.1 in that they are the same internal bit.)
- Another version of the Remote Fault bit is updated whenever the ICS1893BF receives a new Link Control Word. An STA can access this version through Management Register 5 (bit 5.13), which like bits 1.4/17.1, also reports the status of the Remote Fault bit received from the remote link partner. However, bit 5.13 is not a latching high bit.

The operation of both bit 1.4/17.1 and bit 5.13 are in compliance with the IEEE Std 802.3u.

7.3.10 Auto-Negotiation Ability (bit 1.3)

The STA reads bit 1.3 to determine if the ICS1893BF can support the auto-negotiation process. If the ICS1893BF:

- Cannot support the auto-negotiation process, it clears bit 1.3 to logic zero.
- Can support the auto-negotiation process, it sets bit 1.3 to logic one. (For the ICS1893BF, the default value of bit 1.3 is logic one.)

7.3.11 Link Status (bit 1.2)

The purpose of this bit 1.2 (which is also accessible through the QuickPoll Detailed Status Register, bit 17.0) is to determine if an established link is dropped, even momentarily. To indicate a link that is:

- Valid, the ICS1893BF sets bit 1.2 to logic one.
- Invalid, the ICS1893BF clears bit 1.2 to logic zero.

This bit is a latching low (LL) bit that the Link Monitor function controls. (For more information on latching high and latching low bits, see Section 7.1.4.1, “Latching High Bits” and Section 7.1.4.2, “Latching Low Bits”.) The Link Monitor function continually observes the data received by either its 10Base-T or 100Base-TX Twisted-Pair Receivers to determine the link status and stores the results in the Link Status bit.

The criterion the Link Monitor uses to determine if a link is valid or invalid depends on the following:

- Type of link
- Present link state (valid or invalid)
- Presence of any link errors
- Auto-negotiation process

For more information on the Link Monitor Function (relative to the Link Status bit), see Section 6.5.5, “10Base-T Operation: Link Monitor”.

Copyright © 2009, IDT, Inc.
All rights reserved.

7.3.12 Jabber Detect (bit 1.1)

The purpose of this bit is to allow an STA to determine if the ICS1893BF detects a Jabber condition as defined in the ISO/IEC specification.The ICS1893BF Jabber Detection function is controlled by the Jabber Inhibit bit in the 10Base-T Operations register (bit 18.5). To detect a Jabber condition, first the ICS1893BF Jabber Detection function must be enabled. When bit 18.5 is logic:

- Zero, the ICS1893BF disables Jabber Detection and sets the Jabber Detect bit to logic zero.
- One, the ICS1893BF enables Jabber Detection and sets the Jabber Detect bit to logic one upon detection of a Jabber condition. When no Jabber condition is detected, the Jabber Detect bit is not altered.

Note:

1. The Jabber Detect bit is accessible through both the Status register (as bit 1.1) and the QuickPoll Detailed Status Register (as bit 17.2). A read of either register clears the Jabber Detect bit.
2. The Jabber Detect bit is a latching high (LH) bit. (For more information on latching high and latching low bits, see Section 7.1.4.1, “Latching High Bits” and Section 7.1.4.2, “Latching Low Bits”.)

7.3.13 Extended Capability (bit 1.0)

The STA reads bit 1.0 to determine if the ICS1893BF has an extended register set. In the ICS1893BF this bit is always logic one, indicating that it has extended registers.

Copyright © 2009, IDT, Inc.
All rights reserved.

7.4 Register 2: PHY Identifier Register

Table 7-7 lists the bits for PHY Identifier Register (Register 2), which is one of two PHY Identifier Registers that are part of a set defined by the ISO/IEC specification. As a set, the PHY Identifier Registers (Registers 2 and 3) include a unique, 32-bit PHY Identifier composed from the following:

- Organizationally Unique Identifier (OUI), discussed in this section
- Manufacturer's PHY Model Number, discussed in Section 7.5, "Register 3: PHY Identifier Register"
- Manufacturer's PHY Revision Number, discussed in Section 7.5, "Register 3: PHY Identifier Register"

All of the bits in the two PHY Identifier Registers are Command Override Write bits. An STA can read them at any time without condition. However, an STA can modify these register bits only when the Command Register Override bit (bit 16.15) is enabled with a logic one.

Note: For an explanation of acronyms used in Table 7-5, see Chapter 1, "Abbreviations and Acronyms".

Table 7-7. PHY Identifier Register (Register 2 [0x02])

Bit	Definition	When Bit = 0	When Bit = 1	Access	Special Function	Default	Hex
2.15	OUI bit 3 | c	N/A	N/A	CW	–	0	0
2.14	OUI bit 4 | d	N/A	N/A	CW	–	0	
2.13	OUI bit 5 | e	N/A	N/A	CW	–	0	
2.12	OUI bit 6 | f	N/A	N/A	CW	–	0	
2.11	OUI bit 7 | g	N/A	N/A	CW	–	0	0
2.10	OUI bit 8 | h	N/A	N/A	CW	–	0	
2.9	OUI bit 9 | I	N/A	N/A	CW	–	0	
2.8	OUI bit 10 | j	N/A	N/A	CW	–	0	
2.7	OUI bit 11 | k	N/A	N/A	CW	–	0	1
2.6	OUI bit 12 | l	N/A	N/A	CW	–	0	
2.5	OUI bit 13 | m	N/A	N/A	CW	–	0	
2.4	OUI bit 14 | n	N/A	N/A	CW	–	1	
2.3	OUI bit 15 | o	N/A	N/A	CW	–	0	5
2.2	OUI bit 16 | p	N/A	N/A	CW	–	1	
2.1	OUI bit 17 | q	N/A	N/A	CW	–	0	
2.0	OUI bit 18 | r	N/A	N/A	CW	–	1	

Copyright © 2009, IDT, Inc.
All rights reserved.

IEEE-Assigned Organizationally Unique Identifier (OUI)

For each manufacturing organization, the IEEE assigns an 3-octet OUI. For Integrated Circuit Systems, Inc. the IEEE-assigned 3-octet OUI is 00A0BEh.

The binary representation of an OUI is formed by expressing each octet as a sequence of eight bits, from least significant to most significant, and from left to right. Table 7-8 provides the ISO/IEC-defined mapping of the OUI (in IEEE Std. 802-1990 format) to Management Registers 2 and 3.

Table 7-8. IEEE-Assigned Organizationally Unique Identifier

First Octet								Second Octet								Third Octet							
0				0				0				A				E				B			
a	b	c	d	e	f	g	h	i	j	k	l	m	n	o	p	q	r	s	t	u	v	w	x
1	2	3	4	5	6	7	8	9	10	11	12	13	14	15	16	17	18	19	20	21	22	23	24
0	0	0	0	0	0	0	0	0	0	0	0	0	1	0	1	0	1	1	1	1	1	0	1
		0		0				1				5				F				1			
		2.15:12		2.11:8				2.7:4				2.3:0				3.15:12				3.11:10			
		Register 2														Register 3							

7.5 Register 3: PHY Identifier Register

Table 7-9 lists the bits for PHY Identifier Register (Register 3), which is one of two PHY Identifier Registers that are part of a set defined by the ISO/IEC specification. This register stores the following:

- Part of the OUI [see the text in Section 7.4, “Register 2: PHY Identifier Register”]
- Manufacturer’s PHY Model Number
- Manufacturer’s PHY Revision Number

All the bits in the two PHY Identifier Registers are Command Override Write bits. An STA can read them at any time without condition. However, An STA can modify these register bits only when the Command Register Override bit (bit 16.15) is enabled with a logic one.

Note: For an explanation of acronyms used in Table 7-5, see Chapter 1, “Abbreviations and Acronyms”.

Table 7-9. PHY Identifier Register (Register 3 [0x03])

Bit	Definition	When Bit = 0	When Bit = 1	Access	Special Function	Default	Hex
3.15	OUI bit 19 | s	N/A	N/A	CW	–	1	F
3.14	OUI bit 20 | t	N/A	N/A	CW	–	1	
3.13	OUI bit 21 | u	N/A	N/A	CW	–	1	
3.12	OUI bit 22 | v	N/A	N/A	CW	–	1	

Copyright © 2009, IDT, Inc.
All rights reserved.

Table 7-9. PHY Identifier Register (Register 3 [0x03])

Bit	Definition	When Bit = 0	When Bit = 1	Access	Special Function	Default	Hex
3.11	OUI bit 23 | w	N/A	N/A	CW	–	0	4
3.10	OUI bit 24 | x	N/A	N/A	CW	–	1	
3.9	Manufacturer's Model Number bit 5	N/A	N/A	CW	–	0	
3.8	Manufacturer's Model Number bit 4	N/A	N/A	CW	–	0	
3.7	Manufacturer's Model Number bit 3	N/A	N/A	CW	–	0	4
3.6	Manufacturer's Model Number bit 2	N/A	N/A	CW	–	1	
3.5	Manufacturer's Model Number bit 1	N/A	N/A	CW	–	0	
3.4	Manufacturer's Model Number bit 0	N/A	N/A	CW	–	0	
3.3	Revision Number bit 3	N/A	N/A	CW	–	0	2
3.2	Revision Number bit 2	N/A	N/A	CW	–	0	
3.1	Revision Number bit 1	N/A	N/A	CW	–	1	
3.0	Revision Number bit 0	N/A	N/A	CW	–	0	

7.5.1 OUI bits 19-24 (bits 3.15:10)

The most-significant 6 bits of register 3 (that is, bits 3.15:10) include OUI bits 19 through 24. OUI bit 19 is stored in bit 3.15, while OUI bit 24 is stored in bit 3.10.

7.5.2 Manufacturer's Model Number (bits 3.9:4)

The model number for the ICS1893BF is 4 (decimal). It is stored in bit 3.9:4 as 00100b.

7.5.3 Revision Number (bits 3.3:0)

Table 7-10 lists the valid ICS1893BF revision numbers, which are 4-bit binary numbers stored in bits 3.3:0.

Table 7-10. ICS1893BF Revision Number

Decimal	Bits 3.3:0	Description
2	0010	IDT 1893B Release with Auto-MDIX

Copyright © 2009, IDT, Inc.
All rights reserved.

7.6 Register 4: Auto-Negotiation Register

Table 7-11 lists the bits for the Auto-Negotiation Register. An STA uses this register to select the ICS1893BF capabilities that it wants to advertise to its remote link partner. During the auto-negotiation process, the ICS1893BF advertises (that is, exchanges) capability data with its remote link partner by using a pre-defined Link Code Word. The Link Code Word is embedded in the Fast Link Pulses exchanged between PHYs when the ICS1893BF has its Auto-Negotiation sublayer enabled. The value of the Link Control Word is established based on the value of the bits in this register.

Note: For an explanation of acronyms used in Table 7-5, see Chapter 1, "Abbreviations and Acronyms".

Table 7-11. Auto-Negotiation Advertisement Register (register 4 [0x04])

Bit	Definition	When Bit = 0	When Bit = 1	Access	SF	Default	Hex
4.15	Next Page	Next page not supported	Next page supported	R/W	–	0	0
4.14	IEEE reserved	Always 0	N/A	CW	–	0†	
4.13	Remote fault	Locally, no faults detected	Local fault detected	R/W	–	0	
4.12	IEEE reserved	Always 0	N/A	CW	–	0†	
4.11	IEEE reserved	Always 0	N/A	CW	–	0†	1
4.10	IEEE reserved	Always 0	N/A	CW	–	0†	
4.9	100Base-T4	Always 0. (Not supported.)	N/A	CW	–	0	
4.8	100Base-TX, full duplex	Do not advertise ability	Advertise ability	R/W	–	1	
4.7	100Base-TX, half duplex	Do not advertise ability	Advertise ability	R/W	–	1	E
4.6	10Base-T, full duplex	Do not advertise ability	Advertise ability	R/W	–	1	
4.5	10Base-T half duplex	Do not advertise ability	Advertise ability	R/W	–	1	
4.4	Selector Field bit S4	IEEE 802.3-specified default	N/A	CW	–	0	
4.3	Selector Field bit S3	IEEE 802.3-specified default	N/A	CW	–	0	1
4.2	Selector Field bit S2	IEEE 802.3-specified default	N/A	CW	–	0	
4.1	Selector Field bit S1	IEEE 802.3-specified default	N/A	CW	–	0	
4.0	Selector Field bit S0	N/A	IEEE 802.3-specified default	CW	–	1	

† As per the IEEE Std 802.3u, during any write operation to any bit in this register, the STA must write the default value to all Reserved bits.

7.6.1 Next Page (bit 4.15)

This bit indicates whether the ICS1893BF uses the Next Page Mode functions during the auto-negotiation process. If bit 4.15 is logic:

- Zero, then the ICS1893BF indicates to its remote link partner that these features are disabled. (Although the default value of this bit is logic zero, the ICS1893BF does support the Next Page function.)
- One, then the ICS1893BF advertises to its remote link partner that this feature is enabled.

Copyright © 2009, IDT, Inc.
All rights reserved.

7.6.2 IEEE Reserved Bit (bit 4.14)

The ISO/IEC specification reserves this bit for future use. However, the ISO/IEC Standard also defines bit 4.14 as the Acknowledge bit.

When this reserved bit is read by an STA, the ICS1893BF returns a logic zero. However, whenever an STA writes to this reserved bit, it must use the default value specified in this data sheet. ICS uses some reserved bits to invoke auxiliary functions. To ensure proper operation of the ICS1893BF, an STA must maintain the default value of these bits. Therefore, ICS recommends that an STA always write the default value of any reserved bits during all management register write operations.

Reserved bit 4.14 is a Command Override Write (CW) bit. Whenever bit 16.15 (the Command Register Override bit) is logic:

- Zero, the ICS1893BF isolates all STA writes to bit 4.14.
- One, an STA can modify the value of bit 4.14.

7.6.3 Remote Fault (bit 4.13)

When the ICS1893BF Auto-Negotiation sublayer is enabled, the ICS1893BF transmits the Remote Fault bit 4.13 to its remote link partner during the auto-negotiation process. The Remote Fault bit is part of the Link Code Word that the ICS1893BF exchanges with its remote link partner. The ICS1893BF sets this bit to logic one whenever it detects a problem with the link, locally. The data in this register is sent to the remote link partner to inform it of the potential problem. If the ICS1893BF does not detect a link fault, it clears bit 4.13 to logic zero.

Whenever the ICS1893BF:

- Does not detect a link fault, the ICS1893BF clears bit 4.13 to logic zero.
- Detects a problem with the link, during the auto-negotiation process, this bit is set. As a result, the data on this bit is sent to the remote link partner to inform it of the potential problem.

7.6.4 IEEE Reserved Bits (bits 4.12:10)

The IEEE reserves these bits for future use. When an STA:

- Reads a reserved bit, the ICS1893BF returns a logic zero.
- Writes to a reserved bit, it must use the default value specified in this data sheet.

The ICS1893BF uses some reserved bits to invoke auxiliary functions. To ensure proper operation of the ICS1893BF, an STA must maintain the default value of these bits. Therefore, ICS recommends that during any STA write operation, an STA write the default value to all reserved bits, even those bits that are Read Only.

Copyright © 2009, IDT, Inc.
All rights reserved.

7.6.5 Technology Ability Field (bits 4.9:5)

When its Auto-Negotiation sublayer is enabled, the ICS1893BF transmits its link capabilities to its remote link partner during the auto-negotiation process. The Technology Ability Field (TAF) bits 4.12:5 determine the specific abilities that the ICS1893BF advertises. The ISO/IEC specification defines the TAF technologies in Annex 28B.

The ISO/IEC specification reserves bits 4.12:10 for future use. When each of these reserved bits is:

- Read by an STA, the ICS1893BF returns a logic zero
- Written to by an STA, the STA must use the default value specified in this data sheet

ICS uses some reserved bits to invoke auxiliary functions. To ensure proper operation of the ICS1893BF, an STA must maintain the default value of these bits. Therefore, ICS recommends that an STA always write the default value of any reserved bits during all management register write operations.

Reserved bits 4.12:10 are Command Override Write (CW) bits. Whenever bit 16.15 (the Command Register Override bit) is logic:

- Zero, the ICS1893BF isolates all STA writes to CW bits, including bits 4.12:10.
- One, an STA can modify the value of bits 4.12:10

Each of the bits 4.9:5 in the TAF represent a specific technology capability. When one of these bits is logic:

- Zero, it indicates to the remote link partner that the local device cannot support the technology represented by the bit.
- One, it indicates to the remote link partner that the local device can support the technology.

With the exception of bit 4.9, the default settings of the TAF bits depend on the ICS1893BF operating mode. Bit 4.9 is always logic zero, indicating that the ICS1893BF cannot support 100Base-T4 operations.

The TAF bits are Command Override Write bits. The default value of these bits depends on the signal level on the HW/SW pin and whether the Auto-Negotiation sublayer is enabled.

With the Auto-Negotiation Enable bit (bit 0.12) set to logic:

- Zero (that is, disabled), the ICS1893BF does not execute the auto-negotiation process. Upon completion of the initialization sequence, the ICS1893BF proceeds to the Idle state and begins transmitting IDLES. Two Control Register bits – the Data Rate Select bit (bit 0.13) and the Duplex Select bit (bit 0.8) – determine the technology mode that the ICS1893BF uses for data transmission and reception. In this mode, the values of the TAF bits (bits 4.8:5) are undefined.
- One (that is, enabled), the ICS1893BF executes the auto-negotiation process and advertises its capabilities to the remote link partner. The TAF bits (bits 4.8:5) determine the capabilities that the ICS1893BF advertises to its remote link partner. For the ICS1893BF, all of these bits 4.8:5 are set to logic one, indicating the ability of the ICS1893BF to provide these technologies.

Note:

1. The ICS1893BF does not alter the value of the Status Register bits based on the TAF bits in register 4, as the ISO/IEC definitions for the Status Register bits require these bits to indicate all the capabilities of the ICS1893BF.
2. The STA can alter the default TAF bit settings, 4.12:5, and subsequently issue an Auto-Negotiation Restart.

7.6.6 Selector Field (Bits 4.4:0)

When its Auto-Negotiation Sublayer is enabled, the ICS1893BF transmits its link capabilities to its remote Link Partner during the auto-negotiation process. The Selector Field is transmitted based on the value of bits 4.4:0. These bits indicate to the remote link partner the type of message being sent during the auto-negotiation process. The ICS1893BF supports IEEE Std. 802.3, represented by a value of 00001b in bits 4.4:0. The ISO/IEC 8802-3 standard defines the Selector Field technologies in Annex 28A.

Copyright © 2009, IDT, Inc.
All rights reserved.

7.7 Register 5: Auto-Negotiation Link Partner Ability Register

Table 7-12 lists the bits for the Auto-Negotiation Link Partner Ability Register. An STA uses this register to determine the capabilities being advertised by the remote link partner. During the auto-negotiation process, the ICS1893BF advertises (that is, exchanges) the capability data with its remote link partner using a pre-defined Link Code Word. The value of the Link Control Word received from its remote link partner establishes the value of the bits in this register.

Note:

1. For an explanation of acronyms used in Table 7-12, see Chapter 1, "Abbreviations and Acronyms".
2. The values in this register are valid only when the auto-negotiation process is complete, as indicated by bit 1.5 or bit 17.4.

Table 7-12. Auto-Negotiation Link Partner Ability Register (register 5 [0x05])

Bit	Definition	When Bit = 0	When Bit = 1	Access	SF	Default	Hex
5.15	Next Page	Next Page disabled	Next Page enabled	RO	–	0	0
5.14	Acknowledge	Always 0	N/A	RO	–	0	
5.13	Remote fault	No faults detected	Remote fault detected	RO	–	0	
5.12	IEEE reserved	Always 0	N/A	RO	–	0†	
5.11	IEEE reserved	Always 0	N/A	RO	–	0†	0
5.10	IEEE reserved	Always 0	N/A	RO	–	0†	
5.9	100Base-T4	Always 0. (Not supported.)	N/A	RO	–	0	
5.8	100Base-TX, full duplex	Link partner is not capable	Link partner is capable	RO	–	0	
5.7	100Base-TX, half duplex	Link partner is not capable	Link partner is capable	RO	–	0	0
5.6	10Base-T, full duplex	Link partner is not capable	Link partner is capable	RO	–	0	
5.5	10Base-T, half duplex	Link partner is not capable	Link partner is capable	RO	–	0	
5.4	Selector Field bit S4	IEEE 802.3 defined. Always 0.	N/A	RO	–	0	
5.3	Selector Field bit S3	IEEE 802.3 defined. Always 0.	N/A	CW	–	0	0
5.2	Selector Field bit S2	IEEE 802.3 defined. Always 0.	N/A	CW	–	0	
5.1	Selector Field bit S1	IEEE 802.3 defined. Always 0.	N/A	CW	–	0	
5.0	Selector Field bit S0	N/A	IEEE 802.3 defined. Always 1.	CW	–	0	

† As per the IEEE Std 802.3u, during any write operation to any bit in this register, the STA must write the default value to all Reserved bits.

7.7.1 Next Page (bit 5.15)

If bit 5.15 is logic:

- Zero, then the remote link partner is indicating that this is the last page being transmitted.
- One, then the remote link partner is indicating that additional pages follow.

Copyright © 2009, IDT, Inc.
All rights reserved.

7.7.2 Acknowledge (bit 5.14)

The ISO/IEC specification defines bit 5.14 as the Acknowledge bit. When this bit is a:

- Zero, it indicates that the remote link partner has not received the ICS1893BF Link Control Word.
- One, it indicates to the ICS1893BF / STA that the remote link partner has acknowledged reception of the ICS1893BF Link Control Word.

7.7.3 Remote Fault (bit 5.13)

The ISO/IEC specification defines bit 5.13 as the Remote Fault bit. This bit is set based on the Link Control Word received from the remote link partner. When this bit is a logic:

- Zero, it indicates that the remote link partner detects a Link Fault.
- One, it indicates to the ICS1893BF / STA that the remote link partner detects a Link Fault.

Note: For more information about this bit, see Section 7.3.9, “Remote Fault (bit 1.4)”.

7.7.4 Technology Ability Field (bits 5.12:5)

The Technology Ability Field (TAF) bits (bits 5.12:5) determine the specific abilities that the remote link partner is advertising. These bits are set based upon the Link Code Word received from the remote link partner during the auto-negotiation process. The ISO/IEC specification defines the TAF technologies in Annex 28B.

The ISO/IEC specification reserves bits 5.12:10 for future use. When each of these reserved bits is:

- Read by an STA, the ICS1893BF returns a logic zero.
- Written to by an STA, the STA must use the default value specified in this data sheet.

IDT uses some reserved bits to invoke auxiliary functions. To ensure proper operation of the ICS1893BF, an STA must maintain the default value of these bits. Therefore, IDT recommends that an STA always write the default value of any reserved bits during all management register write operations.

7.7.5 Selector Field (bits 5.4:0)

The Selector Field bits indicate the technology or encoding that the remote link partner is using for the Auto-Negotiation message. The ICS1893BF supports only IEEE Std. 802.3, represented by a value of 00001b in bits 5.4:0. The ISO/IEC standard defines the Selector Field technologies in Annex 28A. Presently, the IEEE standard defines the following two valid codes:

- 00001b (IEEE Std 802.3)
- 00010b (IEEE Std 802.9)

Copyright © 2009, IDT, Inc.
All rights reserved.

7.8 Register 6: Auto-Negotiation Expansion Register

Table 7-13 lists the bits for the Auto-Negotiation Expansion Register, which indicates the status of the Auto-Negotiation process.

Note: For an explanation of acronyms used in Table 7-13, see Chapter 1, "Abbreviations and Acronyms".

Table 7-13. Auto-Negotiation Expansion Register (register 6 [0x06])

Bit	Definition	When Bit = 0	When Bit = 1	Access	SF	Default	Hex
6.15	IEEE reserved	Always 0	N/A	CW	–	0†	0
6.14	IEEE reserved	Always 0	N/A	CW	–	0†	
6.13	IEEE reserved	Always 0	N/A	CW	–	0†	
6.12	IEEE reserved	Always 0	N/A	CW	–	0†	
6.11	IEEE reserved	Always 0	N/A	CW	–	0†	0
6.10	IEEE reserved	Always 0	N/A	CW	–	0†	
6.9	IEEE reserved	Always 0	N/A	CW	–	0†	
6.8	IEEE reserved	Always 0	N/A	CW	–	0†	
6.7	IEEE reserved	Always 0	N/A	CW	–	0†	0
6.6	IEEE reserved	Always 0	N/A	CW	–	0†	
6.5	IEEE reserved	Always 0	N/A	CW	–	0†	
6.4	Parallel detection fault	No Fault	Multiple technologies detected	RO	LH	0	
6.3	Link partner Next Page able	Link partner is not Next Page able	Link partner is Next Page able	RO	–	0	4
6.2	Next Page able	Local device is not Next Page able	Local device is Next Page able	RO	–	1	
6.1	Page received	Next Page not received	Next Page received	RO	LH	0	
6.0	Link partner Auto-Negotiation able	Link partner is not Auto-Negotiation able	Link partner is Auto-Negotiation able	RO	–	0	

† As per the IEEE Std 802.3u, during any write operation to any bit in this register, the STA must write the default value to all Reserved bits.

7.8.1 IEEE Reserved Bits (bits 6.15:5)

The ISO/IEC specification reserves these bits for future use. When an STA:

- Reads a reserved bit, the ICS1893BF returns a logic zero.
- Writes to a reserved bit, the STA must use the default value specified in this data sheet.

ICS uses some reserved bits to invoke auxiliary functions. To ensure proper operation of the ICS1893BF, an STA must maintain the default value of these bits. Therefore, IDT recommends that an STA always write the default value of any reserved bits during all management register write operations.

Reserved bits 5.15:5 are Command Override Write (CW) bits. When the Command Register Override bit (bit 16.15) is logic:

- Zero, the ICS1893BF isolates all STA writes to CW bits.
- One, an STA can modify the value of these bits

Copyright © 2009, IDT, Inc.
All rights reserved.

7.8.2 Parallel Detection Fault (bit 6.4)

The ICS1893BF sets this bit to a logic one if a parallel detection fault is encountered. A parallel detection fault occurs when the ICS1893BF cannot disseminate the technology being used by its remote link partner.

Bit 6.4 is a latching high (LH) status bit. (For more information on latching high and latching low bits, see Section 7.1.4.1, “Latching High Bits” and Section 7.1.4.2, “Latching Low Bits”.)

7.8.3 Link Partner Next Page Able (bit 6.3)

Bit 6.3 is a status bit that reports the capabilities of the remote link partner to support the Next Page features of the auto-negotiation process. The ICS1893BF sets this bit to a logic one if the remote link partner sets the Next Page bit in its Link Control Word.

7.8.4 Next Page Able (bit 6.2)

Bit 6.2 is a status bit that reports the capabilities of the ICS1893BF to support the Next Page features of the auto-negotiation process. The ICS1893BF sets this bit to a logic one to indicate that it can support these features.

7.8.5 Page Received (bit 6.1)

The ICS1893BF sets its Page Received bit to a logic one whenever a new Link Control Word is received and stored in its Auto-Negotiation link partner ability register. The Page Received bit is cleared to logic zero on a read of the Auto-Negotiation Expansion Register.

Bit 6.1 is a latching high (LH) status bit. (For more information on latching high and latching low bits, see Section 7.1.4.1, “Latching High Bits” and Section 7.1.4.2, “Latching Low Bits”.)

7.8.6 Link Partner Auto-Negotiation Able (bit 6.0)

If the ICS1893BF:

- Does not receive Fast Link Pulse bursts from its remote link partner, then this bit remains a logic zero.
- Receives valid FLP bursts from its remote link partner (thereby indicating that it can participate in the auto-negotiation process), then the ICS1893BF sets this bit to a logic one.

Copyright © 2009, IDT, Inc.
All rights reserved.

7.9 Register 7: Auto-Negotiation Next Page Transmit Register

Table 7-14 lists the bits for the Auto-Negotiation Next Page Transmit Register, which establishes the contents of the Next Page Link Control Word that is transmitted during Next Page Operations. This table is compliant with the ISO/IEC specification.

Note: For an explanation of acronyms used in Table 7-14, see Chapter 1, "Abbreviations and Acronyms".

Table 7-14. Auto-Negotiation Next Page Transmit Register (register 7 [0x07])

Bit	Definition	When Bit = 0	When Bit = 1	Access	SF	Default	Hex
7.15	Next Page	Last Page	Additional Pages follow	RW	–	0	2
7.14	IEEE reserved	Always 0	N/A	RO	–	0†	
7.13	Message Page	Unformatted Page	Message Page	RW	–	1	
7.12	Acknowledge 2	Cannot comply with Message	Can comply with Message	RW	–	0	
7.11	Toggle	Previous Link Code Word was zero	Previous Link Code Word was one	RO	–	0	0
7.10	Message code field /Unformatted code field	Bit value depends on the particular message	Bit value depends on the particular message	RW	–	0	
7.9	Message code field /Unformatted code field	Bit value depends on the particular message	Bit value depends on the particular message	RW	–	0	
7.8	Message code field /Unformatted code field	Bit value depends on the particular message	Bit value depends on the particular message	RW	–	0	
7.7	Message code field /Unformatted code field	Bit value depends on the particular message	Bit value depends on the particular message	RW	–	0	0
7.6	Message code field /Unformatted code field	Bit value depends on the particular message	Bit value depends on the particular message	RW	–	0	
7.5	Message code field /Unformatted code field	Bit value depends on the particular message	Bit value depends on the particular message	RW	–	0	
7.4	Message code field /Unformatted code field	Bit value depends on the particular message	Bit value depends on the particular message	RW	–	0	
7.3	Message code field /Unformatted code field	Bit value depends on the particular message	Bit value depends on the particular message	RW	–	0	1
7.2	Message code field /Unformatted code field	Bit value depends on the particular message	Bit value depends on the particular message	RW	–	0	
7.1	Message code field /Unformatted code field	Bit value depends on the particular message	Bit value depends on the particular message	RW	–	0	
7.0	Message code field /Unformatted code field	Bit value depends on the particular message	Bit value depends on the particular message	RW	–	1	

† As per the IEEE Std 802.3u, during any write operation to any bit in this register, the STA must write the default value to all Reserved bits.

Copyright © 2009, IDT, Inc.
All rights reserved.

7.9.1 Next Page (bit 7.15)

This bit is used by a PHY/STA to enable the transmission of Next Pages following the base Link Control Word as long as the remote link partner supports the Next Page features of Auto-Negotiation.

This bit is used to establish the state of the Next Page (NP) bit of the Next Page Link Control Word (that is, the NP bit of the Next Page Link Control Word tracks this bit). During a Next Page exchange, if the NP bit is logic:

- Zero, it indicates to the remote link partner that this is the last Message or Page.
- One, it indicates to the remote link partner that additional Pages follow this Message.

7.9.2 IEEE Reserved Bit (bit 7.14)

The ISO/IEC specification reserves this bit for future use. When this reserved bit is:

- Read by an STA, the ICS1893BF returns a logic zero.
- Written to by an STA, the STA must use the default value specified in this data sheet.

IDT uses some reserved bits to invoke auxiliary functions. To ensure proper operation of the ICS1893BF, an STA must maintain the default value of these bits. Therefore, IDT recommends that an STA always write the default value of any reserved bits during all management register write operations.

7.9.3 Message Page (bit 7.13)

The Message Page (MP) bit (bit 7.13) is used to determine the format or type of Page being transmitted. The value of this bit establishes the state of the MP bit in the Next Page Link Control Word.

If this bit is set to logic:

- Zero, it indicates that the Page is an Unformatted Page.
- One, it indicates to the remote link partner that the Page being transmitted is a Message Page.

7.9.4 Acknowledge 2 (bit 7.12)

This bit is used to indicate the ability of the ICS1893BF to comply with a message.

The value of this bit establishes the state of the Ack2 bit in the Next Page Link Control Word. If this bit is set to logic:

- Zero, it indicates that the ICS1893BF cannot comply with the message.
- One, it indicates to the remote link partner that the ICS1893BF can comply with the message.

7.9.5 Toggle (bit 7.11)

The Toggle (T) bit (bit 7.11) is used to synchronize the transmission of Next Page messages with the remote link partner. The value of this bit establishes the state of the Toggle bit in the Next Page Link Control Word. This bit toggles with each transmitted Link Control Word.

If the previous Next Page Link Control Word Toggle bit has a value of logic:

- Zero, then the Toggle bit is set to logic one.
- One, then the Toggle bit is set to logic zero.

The initial Next Page Link Control Word Toggle bit is set to the inverse of the base Link Control Word bit 11.

7.9.6 Message Code Field / Unformatted Code Field (bits 7.10:0)

Bits 7.10:0 represent either the Message Code field M[10:0] or the Unformatted Code field U[10:0] bits. The value of these bits establish the state of the M[10:0] / U[10:0] bits in the Next Page Link Control Word.

Copyright © 2009, IDT, Inc.
All rights reserved.

7.10 Register 8: Auto-Negotiation Next Page Link Partner Ability Register

Table 7-15 lists the bits for the Auto-Negotiation Next Page Link Partner Ability Register, which establishes the contents of the Next Page Link Control Word that is transmitted during Next Page Operations. This table is compliant with the ISO/IEC specification.

Note: For an explanation of acronyms used in Table 7-15, see Chapter 1, "Abbreviations and Acronyms".

Table 7-15. Auto-Negotiation Next Page Link Partner Ability Register (register 8 [0x08])

Bit	Definition	When Bit = 0	When Bit = 1	Access	SF	Default	Hex
8.15	Next Page	Last Page	Additional Pages follow	RO	–	0	0
8.14	IEEE reserved	Always 0	N/A	RO	–	0†	
8.13	Message Page	Unformatted Page	Message Page	RO	–	0	
8.12	Acknowledge 2	Cannot comply with Message	Can comply with Message	RO	–	0	
8.11	Toggle	Previous Link Code Word was zero	Previous Link Code Word was one	RO	–	0	0
8.10	Message code field /Unformatted code field	Bit value depends on the particular message	Bit value depends on the particular message	RO	–	0	
8.9	Message code field /Unformatted code field	Bit value depends on the particular message	Bit value depends on the particular message	RO	–	0	
8.8	Message code field /Unformatted code field	Bit value depends on the particular message	Bit value depends on the particular message	RO	–	0	
8.7	Message code field /Unformatted code field	Bit value depends on the particular message	Bit value depends on the particular message	RO	–	0	0
8.6	Message code field /Unformatted code field	Bit value depends on the particular message	Bit value depends on the particular message	RO	–	0	
8.5	Message code field /Unformatted code field	Bit value depends on the particular message	Bit value depends on the particular message	RO	–	0	
8.4	Message code field /Unformatted code field	Bit value depends on the particular message	Bit value depends on the particular message	RO	–	0	
8.3	Message code field /Unformatted code field	Bit value depends on the particular message	Bit value depends on the particular message	RO	–	0	0
8.2	Message code field /Unformatted code field	Bit value depends on the particular message	Bit value depends on the particular message	RO	–	0	
8.1	Message code field /Unformatted code field	Bit value depends on the particular message	Bit value depends on the particular message	RO	–	0	
8.0	Message code field /Unformatted code field	Bit value depends on the particular message	Bit value depends on the particular message	RO	–	0	

† As per the IEEE Std 802.3u, during any write operation to any bit in this register, the STA must write the default value to all Reserved bits.

Copyright © 2009, IDT, Inc.
All rights reserved.

7.10.1 Next Page (bit 8.15)

This bit is used by a PHY/STA to enable the transmission of Next Pages following the base Link Control Word as long as the remote link partner supports the Next Page features of Auto-Negotiation.

This bit is used to establish the state of the Next Page (NP) bit of the Next Page Link Control Word (that is, the NP bit of the Next Page Link Control word tracks this bit). During a Next Page exchange, if the NP bit is logic:

- Zero, it indicates to the remote link partner that this is the last Message or Page.
- One, it indicates to the remote link partner that additional Pages follow this Message.

7.10.2 IEEE Reserved Bit (bit 8.14)

The ISO/IEC specification reserves this bit for future use. When this reserved bit is:

- Read by an STA, the ICS1893BF returns a logic zero.
- Written to by an STA, the STA must use the default value specified in this data sheet.

IDT uses some reserved bits to invoke auxiliary functions. To ensure proper operation of the ICS1893BF, an STA must maintain the default value of these bits. Therefore, IDT recommends that an STA always write the default value of any reserved bits during all management register write operations.

7.10.3 Message Page (bit 8.13)

The Message Page (MP) bit (bit 8.13) is used to determine the format or type of Page being transmitted. The value of this bit establishes the state of the MP bit in the Next Page Link Control Word.

If this bit is set to logic:

- Zero, it indicates that the Page is an Unformatted Page.
- One, it indicates to the remote link partner that the Page being transmitted is a Message Page.

7.10.4 Acknowledge 2 (bit 8.12)

This bit is used to indicate the ability of the ICS1893BF to comply with a message.

The value of this bit establishes the state of the Ack2 bit in the Next Page Link Control Word. If this bit is set to logic:

- Zero, it indicates that the ICS1893BF cannot comply with the message.
- One, it indicates to the remote link partner that the ICS1893BF can comply with the message.

If the previous Next Page Link Control Word Toggle bit has a value of logic:

- Zero, then the Toggle bit is set to logic one.
- One, then the Toggle bit is set to logic zero.

The initial Next Page Link Control Word Toggle bit is set to the inverse of the base Link Control Word bit 11.

7.10.5 Message Code Field / Unformatted Code Field (bits 8.10:0)

Bits 8.10:0 represent either the Message Code field M[10:0] or the Unformatted Code field U[10:0] bits. The value of these bits establish the state of the M[10:0] / U[10:0] bits in the Next Page Link Control Word.

Copyright © 2009, IDT, Inc.
All rights reserved.

7.11 Register 16: Extended Control Register

Table 7-16 lists the bits for the Extended Control Register, which the ICS1893BF provides to allow an STA to customize the operations of the device.

Note:

1. For an explanation of acronyms used in Table 7-16, see Chapter 1, “Abbreviations and Acronyms”.
2. During any write operation to any bit in this register, the STA must write the default value to all Reserved bits.

Table 7-16. Extended Control Register (register 16 [0x10])

Bit	Definition	When Bit = 0	When Bit = 1	Access	SF	Default	Hex
16.15	Command Override Write enable	Disabled	Enabled	RW	SC	0	–
16.14	ICS reserved	Read unspecified	Read unspecified	RW/0	–	0	
16.13	ICS reserved	Read unspecified	Read unspecified	RW/0	–	0	
16.12	ICS reserved	Read unspecified	Read unspecified	RW/0	–	0	
16.11	ICS reserved	Read unspecified	Read unspecified	RW/0	–	0	–
16.10	PHY Address Bit 4	For a detailed explanation of this bit’s operation, see Section 5.5, “Status Interface”.		RO	–	P4RD†	
16.9	PHY Address Bit 3	For a detailed explanation of this bit’s operation, see Section 5.5, “Status Interface”.		RO	–	P3TD†	
16.8	PHY Address Bit 2	For a detailed explanation of this bit’s operation, see Section 5.5, “Status Interface”.		RO	–	P2LI†	
16.7	PHY Address Bit 1	For a detailed explanation of this bit’s operation, see Section 5.5, “Status Interface”.		RO	–	P1CL†	–
16.6	PHY Address Bit 0	For a detailed explanation of this bit’s operation, see Section 5.5, “Status Interface”.		RO	–	P0AC†	
16.5	Stream Cipher Test Mode	Normal operation	Test mode	RW	–	0	
16.4	ICS reserved	Read unspecified	Read unspecified	RW/0	–	–	
16.3	NRZ/NRZI encoding	NRZ encoding	NRZI encoding	RW	–	1	8
16.2	Transmit invalid codes	Disabled	Enabled	RW	–	0	
16.1	ICS reserved	Read unspecified	Read unspecified	RW/0	–	0	
16.0	Stream Cipher disable	Stream Cipher enabled	Stream Cipher disabled	RW	–	0	

† The default is the state of this pin at reset.

Copyright © 2009, IDT, Inc.
All rights reserved.

7.11.1 Command Override Write Enable (bit 16.15)

The Command Override Write Enable bit provides an STA the ability to alter the Command Override Write (CW) bits located throughout the MII Register set. A two-step process is required to alter the value of a CW bit:

1. Step one is to issue a Command Override Write, (that is, set bit 16.15 to logic one). This step enables the next MDIO write to have the ability to alter any CW bit.
2. Step two is to write to the register that includes the CW bit which requires modification.

Note: The Command Override Write Enable bit is a Self-Clearing bit that is automatically reset to logic zero after the next MII write, thereby allowing only one subsequent write to alter the CW bits in a single register. To alter additional CW bits, the Command Override Write Enable bit must once again be set to logic one.

7.11.2 ICS Reserved (bits 16.14:11)

IDT is reserving these bits for future use. Functionally, these bits are equivalent to IEEE Reserved bits. When one of these reserved bits is:

- Read by an STA, the ICS1893BF returns a logic zero.
- Written to by an STA, the STA must use the default value specified in this data sheet.

IDT uses some reserved bits to invoke auxiliary functions. To ensure proper operation of the ICS1893BF, an STA must maintain the default value of these bits. Therefore, IDT recommends that an STA always write the default value of any reserved bits during all management register write operations.

7.11.3 PHY Address (bits 16.10:6)

These five bits hold the Serial Management Port Address of the ICS1893BF. During either a hardware reset or a power-on reset, the PHY address is read from the LED interface. (For information on the LED interface, see Section 5.5, “Status Interface” and Section 8.2.2, “Multi-Function (Multiplexed) Pins: PHY Address and LED Pins”). The PHY address is then latched into this register. (The value of each of the PHY Address bits is unaffected by a software reset.)

7.11.4 Stream Cipher Scrambler Test Mode (bit 16.5)

The Stream Cipher Scrambler Test Mode bit is used to force the ICS1893BF to lose LOCK, thereby requiring the Stream Cipher Scrambler to resynchronize.

7.11.5 ICS Reserved (bit 16.4)

See Section 7.11.2, “ICS Reserved (bits 16.14:11)”, the text for which also applies here.

7.11.6 NRZ/NRZI Encoding (bit 16.3)

This bit allows an STA to control whether NRZ (Not Return to Zero) or NRZI (Not Return to Zero, Invert on One) encoding is applied to the serial transmit data stream in 100Base-TX mode. When this bit is logic:

- Zero, the ICS1893BF encodes the serial transmit data stream using NRZ encoding.
- One, the ICS1893BF encodes the serial transmit data stream using NRZI encoding.

Copyright © 2009, IDT, Inc.
All rights reserved.

7.11.7 Invalid Error Code Test (bit 16.2)

The Invalid Error Code Test bit allows an STA to force the ICS1893BF to transmit symbols that are typically classified as invalid. The purpose of this test bit is to permit thorough testing of the 4B/5B encoding and the serial transmit data stream by allowing generation of bit patterns that are considered invalid by the ISO/IEC 4B/5B definition.

When this bit is logic:

- Zero, the ISO/IEC defined 4B/5B translation takes place.
- One – and the TXER signal is asserted by the MAC – the MII input nibbles are translated according to Table 7-17.

Table 7-17. Invalid Error Code Translation Table

Symbol	Meaning	MII Input Nibble	Translation
V	Invalid Code	0000	00000
V	Invalid Code	0001	00001
V	Invalid Code	0010	00010
V	Invalid Code	0011	00011
H	Error	0100	00100
V	Invalid Code	0101	00101
V	Invalid Code	0110	00110
R	ESD	0111	00111
V	Invalid Code	1000	00000
T	ESD	1001	01101
V	Invalid Code	1010	01100
K	SSD	1011	10001
V	Invalid Code	1100	10000
V (S)	Invalid Code	1101	11001
J	SSD	1110	11000
I	Idle	1111	11111

7.11.8 ICS Reserved (bit 16.1)

See Section 7.11.2, “ICS Reserved (bits 16.14:11)”, the text for which also applies here.

7.11.9 Stream Cipher Disable (bit 16.0)

The Stream Cipher Disable bit allows an STA to control whether the ICS1893BF employs the Stream Cipher Scrambler in the transmit and receive data paths. When this bit is set to logic:

- Zero, the Stream Cipher Encoder and Decoder are both enabled for normal operations.
- One, the Stream Cipher Encoder and Decoder are disabled. This action results in an unscrambled data stream (for example, the ICS1893BF transmits unscrambled IDLES, and so forth.

Note: The Stream Cipher Scrambler can be used only for 100-MHz operations.

Copyright © 2009, IDT, Inc.
All rights reserved.

7.12 Register 17: Quick Poll Detailed Status Register

Table 7-18 lists the bits for the Quick-Poll Detailed Status Register. This register is a 16-bit read-only register used to provide an STA with detailed status of the ICS1893BF operations. During reset, it is initialized to pre-defined default values.

Note:

1. For an explanation of acronyms used in Table 7-18, see Chapter 1, "Abbreviations and Acronyms".
2. Most of this register's bits are latching high or latching low, which allows the ICS1893BF to capture and save the occurrence of an event for an STA to read. (For more information on latching high and latching low bits, see Section 7.1.4.1, "Latching High Bits" and Section 7.1.4.2, "Latching Low Bits".)
3. Although some of these status bits are redundant with other management registers, the ICS1893BF provides this group of bits to minimize the number of Serial Management Cycles required to collect the status data.

Table 7-18. Quick Poll Detailed Status Register (register 17 [0x11])

Bit	Definition	When Bit = 0	When Bit = 1	Access	SF	Default	Hex
17.15	Data rate	10 Mbps	100 Mbps	RO	–	–	–
17.14	Duplex	Half duplex	Full duplex	RO	–	–	
17.13	Auto-Negotiation Progress Monitor Bit 2	Reference Decode Table	Reference Decode Table	RO	LMX	0	
17.12	Auto-Negotiation Progress Monitor Bit 1	Reference Decode Table	Reference Decode Table	RO	LMX	0	
17.11	Auto-Negotiation Progress Monitor Bit 0	Reference Decode Table	Reference Decode Table	RO	LMX	0	0
17.10	100Base-TX signal lost	Valid signal	Signal lost	RO	LH	0	
17.9	100BasePLL Lock Error	PLL locked	PLL failed to lock	RO	LH	0	
17.8	False Carrier detect	Normal Carrier or Idle	False Carrier	RO	LH	0	
17.7	Invalid symbol detected	Valid symbols observed	Invalid symbol received	RO	LH	0	0
17.6	Halt Symbol detected	No Halt Symbol received	Halt Symbol received	RO	LH	0	
17.5	Premature End detected	Normal data stream	Stream contained two IDLE symbols	RO	LH	0	
17.4	Auto-Negotiation complete	Auto-Negotiation in process	Auto-Negotiation complete	RO	–	0	
17.3	100Base-TX signal detect	Signal present	No signal present	RO	–	0	0
17.2	Jabber detect	No jabber detected	Jabber detected	RO	LH	0	
17.1	Remote fault	No remote fault detected	Remote fault detected	RO	LH	0	
17.0	Link Status	Link is not valid	Link is valid	RO	LL	0	

Copyright © 2009, IDT, Inc.
All rights reserved.

7.12.1 Data Rate (bit 17.15)

The Data Rate bit indicates the 'selected technology'. If the ICS1893BF is in:

- Hardware mode, the value of this bit is determined by the 10/100SEL input pin.
- Software mode, the value of this bit is determined by the Data Rate bit 0.13.

When bit 17.15 is logic:

- Zero, it indicates that 10-MHz operations are selected.
- One, the ICS1893BF is indicating that 100-MHz operations are selected.

Note: This bit does not imply any link status.

7.12.2 Duplex (bit 17.14)

The Duplex bit indicates the 'selected technology'. If the ICS1893BF is in:

- Hardware mode, the value of this bit is determined by the DPXSEL input pin.
- Software mode, the value of this bit is determined by the Duplex Mode bit 0.8.

When bit 17.14 is logic:

- Zero, it indicates that half-duplex operations are selected.
- One, the ICS1893BF is indicating that full-duplex operations are selected.

Note: This bit does not imply any link status.

7.12.3 Auto-Negotiation Progress Monitor (bits 17.13:11)

The Auto-Negotiation Progress Monitor consists of the Auto-Negotiation Complete bit (bit 17.4) and the three Auto-Negotiation Monitor bits (bits 17.13:11). The Auto-Negotiation Progress Monitor continually examines the state of the Auto-Negotiation Process State Machine and reports the status of Auto-Negotiation using the three Auto-Negotiation Monitor bits. Therefore, the value of these three bits provides the status of the Auto-Negotiation Process.

These three bits are initialized to logic zero in one of the following ways:

- A reset (see Section 4.1, "Reset Operations")
- Disabling Auto-Negotiation [see Section 7.2.4, "Auto-Negotiation Enable (bit 0.12)"]
- Restarting Auto-Negotiation [see Section 7.2.7, "Restart Auto-Negotiation (bit 0.9)"]

If Auto-Negotiation is enabled, these bits continually latch the highest state that the Auto-Negotiation State Machine achieves. That is, they are updated only if the binary value of the next state is greater than the binary value of the present state as outlined in Table 7-19.

Copyright © 2009, IDT, Inc.
All rights reserved.

Note: An MDIO read of these bits provides a history of the greatest progress achieved by the auto-negotiation process. In addition, the MDIO read latches the present state of the Auto-Negotiation State Machine for a subsequent read.

Table 7-19. Auto-Negotiation State Machine (Progress Monitor)

Auto-Negotiation State Machine	Auto-Negotiation Progress Monitor			
	Auto-Negotiation Complete Bit (Bit 17.4)	Auto-Negotiation Monitor Bit 2 (Bit 17.13)	Auto-Negotiation Monitor Bit 1 (Bit 17.12)	Auto-Negotiation Monitor Bit 0 (Bit 17.11)
Idle	0	0	0	0
Parallel Detected	0	0	0	1
Parallel Detection Failure	0	0	1	0
Ability Matched	0	0	1	1
Acknowledge Match Failure	0	1	0	0
Acknowledge Matched	0	1	0	1
Consistency Match Failure	0	1	1	0
Consistency Matched	0	1	1	1
Auto-Negotiation Completed Successfully	1	0	0	0

7.12.4 100Base-TX Receive Signal Lost (bit 17.10)

The 100Base-TX Receive Signal Lost bit indicates to an STA whether the ICS1893BF has lost its 100Base-TX Receive Signal. If this bit is set to a logic:

- Zero, it indicates the Receive Signal has remained valid since either the last read or reset of this register.
- One, it indicates the Receive Signal was lost since either the last read or reset of this register.

This bit is a latching high bit. (For more information on latching high and latching low bits, see Section 7.1.4.1, “Latching High Bits” and Section 7.1.4.2, “Latching Low Bits”.)

Note: This bit has no definition in 10Base-T mode.

7.12.5 100Base PLL Lock Error (bit 17.9)

The Phase-Locked Loop (PLL) Lock Error bit indicates to an STA whether the ICS1893BF has ever experienced a PLL Lock Error. A PLL Lock Error occurs when the PLL fails to lock onto the incoming 100Base data stream. If this bit is set to a logic:

- Zero, it indicates that a PLL Lock Error has not occurred since either the last read or reset of this register.
- One, it indicates that a PLL Lock Error has occurred since either the last read or reset of this register.

This bit is a latching high bit. (For more information on latching high and latching low bits, see Section 7.1.4.1, “Latching High Bits” and Section 7.1.4.2, “Latching Low Bits”.)

Note: This bit has no definition in 10Base-T mode.

Copyright © 2009, IDT, Inc.
All rights reserved.

7.12.6 False Carrier (bit 17.8)

The False Carrier bit indicates to an STA the detection of a False Carrier by the ICS1893BF in 100Base mode.

A False Carrier occurs when the ICS1893BF begins evaluating potential data on the incoming 100Base data stream, only to learn that it was not a valid /J/K/. If this bit is set to a logic:

- Zero, it indicates a False Carrier has not been detected since either the last read or reset of this register.
- One, it indicates a False Carrier was detected since either the last read or reset of this register.

This bit is a latching high bit. (For more information on latching high and latching low bits, see Section 7.1.4.1, “Latching High Bits” and Section 7.1.4.2, “Latching Low Bits”.)

Note: This bit has no definition in 10Base-T mode.

7.12.7 Invalid Symbol (bit 17.7)

The Invalid Symbol bit indicates to an STA the detection of an Invalid Symbol in a 100Base data stream by the ICS1893BF.

When the ICS1893BF is receiving a packet, it examines each received Symbol to ensure the data is error free. If an error occurs, the port indicates this condition to the MAC by asserting the RXER signal. In addition, the ICS1893BF sets its Invalid Symbol bit to logic one. Therefore, if this bit is set to a logic:

- Zero, it indicates an Invalid Symbol has not been detected since either the last read or reset of this register.
- One, it indicates an Invalid Symbol was detected since either the last read or reset of this register.

This bit is a latching high bit. (For more information on latching high and latching low bits, see Section 7.1.4.1, “Latching High Bits” and Section 7.1.4.2, “Latching Low Bits”.)

Note: This bit has no definition in 10Base-T mode.

7.12.8 Halt Symbol (bit 17.6)

The Halt Symbol bit indicates to an STA the detection of a Halt Symbol in a 100Base data stream by the ICS1893BF.

During reception of a valid packet, the ICS1893BF examines each symbol to ensure that the data being passed to the MAC Interface is error free. In addition, it looks for special symbols such as the Halt Symbol. If a Halt Symbol is encountered, the ICS1893BF indicates this condition to the MAC.

If this bit is set to a logic:

- Zero, it indicates a Halt Symbol has not been detected since either the last read or reset of this register.
- One, it indicates a Halt Symbol was detected in the packet since either the last read or reset of this register.

This bit is a latching high bit. (For more information on latching high and latching low bits, see Section 7.1.4.1, “Latching High Bits” and Section 7.1.4.2, “Latching Low Bits”.)

Note: This bit has no definition in 10Base-T mode.

Copyright © 2009, IDT, Inc.
All rights reserved.

7.12.9 Premature End (bit 17.5)

The Premature End bit indicates to an STA the detection of two consecutive Idles in a 100Base data stream by the ICS1893BF.

During reception of a valid packet, the ICS1893BF examines each symbol to ensure that the data being passed to the MAC Interface is error free. If two consecutive Idles are encountered, it indicates this condition to the MAC by setting this bit.

If this bit is set to a logic:

- Zero, it indicates a Premature End condition has not been detected since either the last read or reset of this register.
- One, it indicates a Premature End condition was detected in the packet since either the last read or reset of this register.

This bit is a latching high bit. (For more information on latching high and latching low bits, see Section 7.1.4.1, “Latching High Bits” and Section 7.1.4.2, “Latching Low Bits”.)

Note: This bit has no definition in 10Base-T mode.

7.12.10 Auto-Negotiation Complete (bit 17.4)

The Auto-Negotiation Complete bit is used to indicate to an STA the completion of the Auto-Negotiation process. When this bit is set to logic:

- Zero, it indicates that the auto-negotiation process is either not complete or is disabled by the Control Register’s Auto-Negotiation Enable bit (bit 0.12)
- One, it indicates that the ICS1893BF has completed the auto-negotiation process and that the contents of Management Registers 4, 5, and 6 are valid.

7.12.11 100Base-TX Signal Detect (bit 17.3)

The 100Base-TX Signal Detect bit indicates either the presence or absence of a signal on the Twisted-Pair Receive pins (TP_RXP and TP_RXN) in 100Base-TX mode. This bit is logic:

- Zero when no signal is detected on the Twisted-Pair Receive pins.
- One when a signal is present on the Twisted-Pair Receive pins.

7.12.12 Jabber Detect (bit 17.2)

Bit 17.2 is functionally identical to bit 1.1. The Jabber Detect bit indicates whether a jabber condition has occurred. This bit is a 10Base-T function.

7.12.13 Remote Fault (bit 17.1)

Bit 17.1 is functionally identical to bit 1.4.

7.12.14 Link Status (bit 17.0)

Bit 17.0 is functionally identical to bit 1.2.

Copyright © 2009, IDT, Inc.
All rights reserved.

7.13 Register 18: 10Base-T Operations Register

The 10Base-T Operations Register provides an STA with the ability to monitor and control the ICS1893BF activity while the ICS1893BF is operating in 10Base-T mode.

Note:

1. For an explanation of acronyms used in Table 7-20, see Chapter 1, "Abbreviations and Acronyms".
2. During any write operation to any bit in this register, the STA must write the default value to all Reserved bits.

Table 7-20. 10Base-T Operations Register (register 18 [0x12])

Bit	Definition	When Bit = 0	When Bit = 1	Access	SF	Default	Hex
18.15	Remote Jabber Detect	No Remote Jabber Condition detected	Remote Jabber Condition Detected	RO	LH	0	–
18.14	Polarity reversed	Normal polarity	Polarity reversed	RO	LH	0	
18.13	ICS reserved	Read unspecified	Read unspecified	RW/0	–	–	
18.12	ICS reserved	Read unspecified	Read unspecified	RW/0	–	–	
18.11	ICS reserved	Read unspecified	Read unspecified	RW/0	–	–	–
18.10	ICS reserved	Read unspecified	Read unspecified	RW/0	–	–	
18.9	ICS reserved	Read unspecified	Read unspecified	RW/0	–	–	
18.8	ICS reserved	Read unspecified	Read unspecified	RW/0	–	–	
18.7	ICS reserved	Read unspecified	Read unspecified	RW/0	–	–	–
18.6	ICS reserved	Read unspecified	Read unspecified	RW/0	–	–	
18.5	Jabber inhibit	Normal Jabber behavior	Jabber Check disabled	RW	–	0	
18.4	ICS reserved	Read unspecified	Read unspecified	RW/1	–	1	
18.3	Auto polarity inhibit	Polarity automatically corrected	Polarity not automatically corrected	RW	–	0	0
18.2	SQE test inhibit	Normal SQE test behavior	SQE test disabled	RW	–	0	
18.1	Link Loss inhibit	Normal Link Loss behavior	Link Always = Link Pass	RW	–	0	
18.0	Squelch inhibit	Normal squelch behavior	No squelch	RW	–	0	

7.13.1 Remote Jabber Detect (bit 18.15)

The Remote Jabber Detect bit is provided to indicate that an ICS1893BF port has detected a Jabber Condition on its receive path. This bit is reset to logic zero on a read of the 10Base-T operations register. When this bit is logic:

- Zero, it indicates a Jabber Condition has not occurred on the port's receive path since either the last read of this register or the last reset of the associated port.
- One, it indicates a Jabber Condition has occurred on the port's receive path since either the last read of this register or the last reset of the associated port.

This bit is a latching high bit. (For more information on latching high and latching low bits, see Section 7.1.4.1, "Latching High Bits" and Section 7.1.4.2, "Latching Low Bits".)

Note: This bit is provided for information purposes only (that is, no actions are taken by the port). The ISO/IEC specification defines the Jabber Condition in terms of a port's transmit path. To set this bit, an ICS1893BF port monitors its receive path and applies the ISO/IEC Jabber criteria to its receive path.

Copyright © 2009, IDT, Inc.
All rights reserved.

7.13.2 Polarity Reversed (bit 18.14)

The Polarity Reversed bit is used to inform an STA whether the ICS1893BF has detected that the signals on the Twisted-Pair Receive Pins (TP_RXP and TP_RXN) are reversed. When the signal polarity is:

- Correct, the ICS1893BF sets bit 18.14 to a logic zero.
- Reversed, the ICS1893BF sets bit 18.14 to logic one.

Note: The ICS1893BF can detect this situation and perform all its operations normally, independent of the reversal.

7.13.3 ICS Reserved (bits 18.13:6)

See Section 7.11.2, "ICS Reserved (bits 16.14:11)", the text for which also applies here.

7.13.4 Jabber Inhibit (bit 18.5)

The Jabber Inhibit bit allows an STA to disable Jabber Detection. When an STA sets this bit to:

- Zero, the ICS1893BF enables 10Base-T Jabber checking.
- One, the ICS1893BF disables its check for a Jabber condition during data transmission.

7.13.5 ICS Reserved (bit 18.4)

See Section 7.11.2, "ICS Reserved (bits 16.14:11)", the text for which also applies here.

7.13.6 Auto Polarity Inhibit (bit 18.3)

The Auto Polarity Inhibit bit allows an STA to prevent the automatic correction of a polarity reversal on the Twisted-Pair Receive pins (TP_RXP and TP_RXN). If an STA sets this bit to logic:

- Zero (the default), the ICS1893BF automatically corrects a polarity reversal on the Twisted-Pair Receive pins.
- One, the ICS1893BF either disables or inhibits the automatic correction of reversed Twisted-Pair Receive pins.

Note: ***The ICS1893BF will not complete the Auto-MDIX function for an inverted polarity cable. This is a rare event with modern manufactured cables. Full Auto-Negotiation and Auto Polarity Correction will complete when the Auto-MDIX function is disabled. Software control for the Auto-MDIX function is available in MDIO Register 19 Bits 9:8.***

7.13.7 SQE Test Inhibit (bit 18.2)

The SQE Test Inhibit bit allows an STA to prevent the generation of the Signal Quality Error pulse. When an STA sets this bit to logic:

- Zero, the ICS1893BF enables its SQE Test generation.
- One, the ICS1893BF disables its SQE Test generation.

The SQE Test provides the ability to verify that the Collision Logic is active and functional. A 10Base-T SQE test is performed by pulsing the Collision signal for a short time after each packet transmission completes, that is, after TXEN goes inactive.

Note:

1. The SQE Test is automatically inhibited in full-duplex and repeater modes, thereby disabling the functionality of this bit.
2. This bit is a control bit and not a status bit. Therefore, it is not updated to indicate this automatic inhibiting of the SQE test in full-duplex mode or repeater mode.

Copyright © 2009, IDT, Inc.
All rights reserved.

7.13.8 Link Loss Inhibit (bit 18.1)

The Link Loss Inhibit bit allows an STA to prevent the ICS1893BF from dropping the link in 10Base-T mode. When an STA sets this bit to logic:

- Zero, the state machine behaves normally and the link status is based on the signaling detected Twisted-Pair Receiver inputs.
- One, the ICS1893BF 10Base-T Link Integrity Test state machine is forced into the 'Link Passed' state regardless of the Twisted-Pair Receiver input conditions.

7.13.9 Squelch Inhibit (bit 18.0)

The Squelch Inhibit bit allows an STA to control the ICS1893BF Squelch Detection in 10Base-T mode. When an STA sets this bit to logic:

- Zero, before the ICS1893BF can establish a valid link, the ICS1893BF must receive valid 10Base-T data.
- One, before the ICS1893BF can establish a valid link, the ICS1893BF must receive both valid 10Base-T data followed by an IDL.

Copyright © 2009, IDT, Inc.
All rights reserved.

7.14 Register 19: Extended Control Register 2

The Extended Control Register provides more refined control of the internal ICS1893BF operations.

Note:

1. For an explanation of acronyms used in Table 7-20, see Chapter 1, “Abbreviations and Acronyms”.
2. During any write operation to any bit in this register, the STA must write the default value to all Reserved bits.

Table 7-21. Extended Control Register (register [0x13])

Bit	Definition	When Bit = 0	When Bit = 1	Access	SF	Default	Hex
19.15	Node Mode	Node mode	Repeater mode	RO	–	0	4
19.14	Hardware/Software Mode	Hardware mode	Software mode	RO	–	1	
19.13	Remote Fault	No faults detected	Remote fault detected	RO	–	0	
19.12	ICS reserved	Read unspecified	Read unspecified	RW	–	0	
19.11	ICS reserved	Read unspecified	Read unspecified	RW	–	0	2
19.10	ICS reserved	Read unspecified	Read unspecified	RO	–	0	
19.9	AMDIX_EN	See Table 7-22	See Table 7-22	RW	–	1	
19.8	MDI_MODE	See Table 7-22	See Table 7-22	RW	–	0	
19.7	Twisted Pair Tri-State Enable, TPTRI	Twisted Pair Signals are not Tri-Stated or No effect	Twisted Pair Signals are Tri-Stated	RW	–	0	0
19.6	ICS reserved	Read unspecified	Read unspecified	RW	–	0	
19.5	ICS reserved	Read unspecified	Read unspecified	RW	–	0	
19.4	ICS reserved	Read unspecified	Read unspecified	RW	–	0	
19.3	ICS reserved	Read unspecified	Read unspecified	RW	–	0	1
19.2	ICS reserved	Read unspecified	Read unspecified	RW	–	0	
19.1	ICS reserved	Read unspecified	Read unspecified	RW	–	0	
19.0	Automatic 100Base-TX Power Down	Do not automatically power down	Power down automatically	RW	–	1	

† The default is the state of this pin at reset.

Copyright © 2009, IDT, Inc.
All rights reserved.

7.14.1 Node Configuration (bit 19.15)

The Node Configuration bit indicates the NOD/MODE.

- In Node mode:
  - The SQE Test default setting is enabled.
  - The Carrier Sense signal (CRS) is asserted in response to either transmit or receive activity.
- The ICS1893BF will only operate in the Node Configuration.

7.14.2 Hardware/Software Priority Status (bit 19.14)

The Hardware/Software Priority Status bit indicates the SW mode.

- The (MDIO) register bits control the ICS1893BF configuration.
- The ICS1893BF will only operate in the Software Configuration.

7.14.3 Remote Fault (bit 19.13)

The ISO/IEC specification defines bit 5.13 as the Remote Fault bit, and bit 19.13 is functionally identical to bit 5.13. The Remote Fault bit is set based on the Link Control Word received from the remote link partner. When this bit is a logic:

- Zero, it indicates the remote link partner does not detect a Link Fault.
- One, it indicates to an STA that the remote link partner detects a Link Fault.

7.14.4 ICS Reserved (bits 19.12:10)

See Section 7.11.2, “ICS Reserved (bits 16.14:11)”, the text for which also applies here.

7.14.5 Auto-MDI/MDIX (bits 19. 9:8) (New)

The ICS1893BF includes the Auto-MDI/MDIX crossover feature. The Auto-MDI/MDIX feature automatically selects the correct MDI or MDIX configuration to match the cable plant by automatically swapping transmit and receive signal pairs at the PHY. Auto-MDI/MDIX is defaulted on but may be disabled for test purposes using either the AMDIX_EN (pin 10) or by writing (bits 19. 9:8). See Table 7-22 for AMDIX_EN (19,9) and MDI_MODE (19,8) operation.

When AMDIX_EN (bit 19,9) is set to 0, the twisted pair transmit/receive is forced by the MDI_MODE bit (19,8).

Note: Holding (Pin 10) AMDIX_EN low will also disable the Auto_MDIX function and force pins TP_AP and TP_AN to be the transmit pair and TP_BP and TP_BN to be the receive pair. AMDIX_EN has a built in 50K Ohm internal pull-up.

Table 7-22. AMDIX_EN (Pin 10) and Control Bits 19. 9:8

AMDIX_EN (Pin 10)	AMDIX_EN [Reg 19:9]	MDI_MODE [Reg 19:8]	Tx/Rx MDI Configuration
x	0	0	straight
x	0	1	cross
0	1	x	straight

Copyright © 2009, IDT, Inc.
All rights reserved.

Table 7-22. AMDIX_EN (Pin 10) and Control Bits 19. 9:8

AMDIX_EN (Pin 10)	AMDIX_EN [Reg 19:9]	MDI_MODE [Reg 19:8]	Tx/Rx MDI Configuration
1	1	x	straight / cross (auto selected)
Default Values:			
1	1	0	straight / cross (auto selected)

Definitions:

straight transmit = TP_AP & TP_AN
receive = TP_BP & TP_BN
cross transmit = TP_BP & TP_BN
receive = TP_AP & TP_AN
AMDIX_EN (Pin 10)AMDIX enable pin with 50 kOhm pull-up resistor
AMDIX_EN [19:9] MDIO register 13h bit 9
MDI_MODE [19:8] MDIO register 13h bit 8

7.14.6 Twisted Pair Tri-State Enable, TPTRI (bit 19.7)

The ICS1893BF provides a Twisted Pair Tri-State Enable bit. This bit forces the TP_TXP and TP_TXN signals to a high-impedance state. When this bit is set to logic:

- Zero, the Twisted Pair Interface is operational.
- One, the Twisted Pair Interface is tri-stated.

7.14.7 ICS Reserved (bits 19.6:1)

See Section 7.11.2, “ICS Reserved (bits 16.14:11)”, the text for which also applies here.

7.14.8 Automatic 100Base-TX Power-Down (bit 19.0)

The Automatic 100Base-TX Power Down bit provides an STA with the means of enabling the ICS1893BF to automatically shut down 100Base-TX support functions when 10Base-T operations are being used. When this bit is set to logic:

- Zero, the 100Base-TX Transceiver does not power down automatically in 100Base-TX mode.
- One, and the ICS1893BF is operating in 10Base-T mode, the 100Base-TX Transceiver automatically turns off to reduce the overall power consumption of the ICS1893BF.

Note: There are other means of powering down the 100Base-TX Transceiver (for example, when the entire device is isolated using bit 0:10).

Copyright © 2009, IDT, Inc.
All rights reserved.

Chapter 8 Pin Diagram, Listings, and Descriptions

8.1 ICS1893BF Pin Diagram

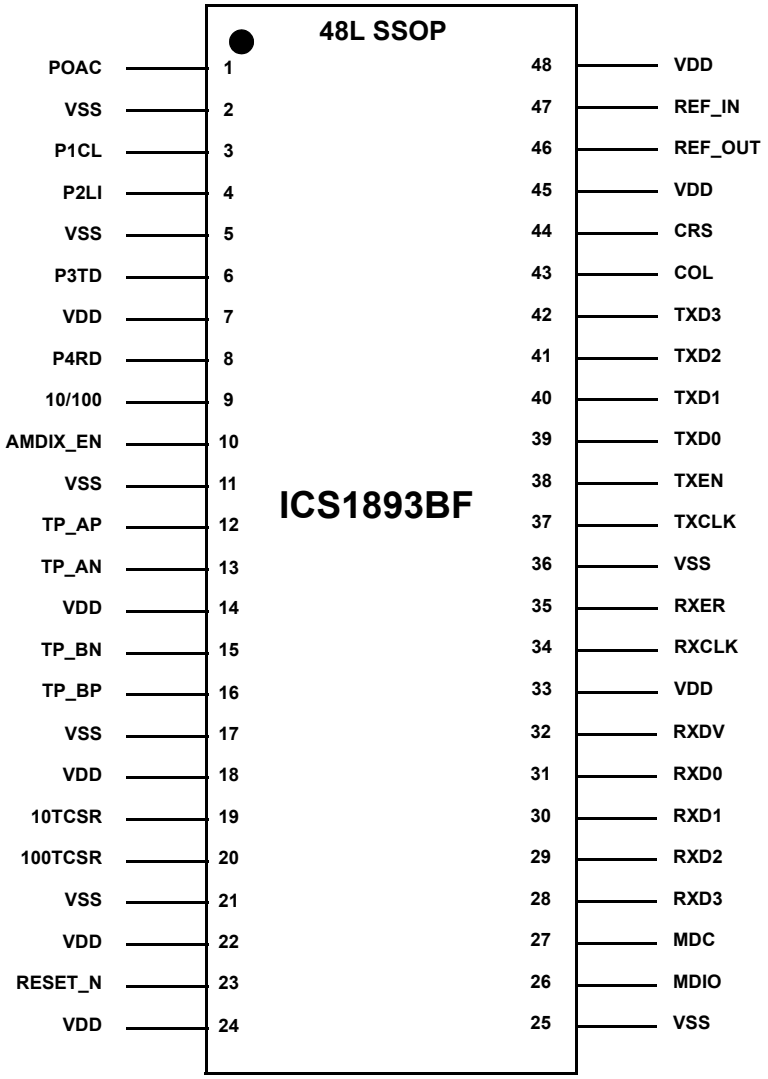

Copyright © 2009, IDT, Inc.
All rights reserved.

8.2 ICS1893BF Pin Descriptions

Table 8-1. ICS1893BF MAC Interface Pins

Signal Name	Pin No.	Signal Description
MDIO	26	Management Data Input/Output
MDC	27	Management Data Clock
RXD3	28	Receive Data 3
RXD2	29	Receive Data 2
RXD1	30	Receive Data 1
RXD0	31	Receive Data 0
RXDV	32	Receive Data Valid
RXCLK	34	Receive Clock
RXER	35	Receive Error
TXCLK	37	Transmit Clock
TXEN	38	Transmit Enable
TXD0	39	Transmit Data 0
TXD1	40	Transmit Data 1
TXD2	41	Transmit Data 2
TXD3	42	Transmit Data 3
COL	43	Collision Detect
CRS	44	Carrier Sense

Table 8-2. ICS 1893BF Multifunction Pins: PHY Address and LED Pins

Signal Name	Pin No.	Signal Description
P4RD	8	Bit 4 of PHY Address, PHYAD[4], OR Receive LED
P3TD	6	Bit 3 of PHY Address, PHYAD[3], OR Transmit LED
P2LI	4	Bit 2 of PHY Address, PHYAD[2], OR Link Integrity LED
P1CL	3	Bit 1 of PHY Address, PHYAD[1], OR Collision LED
P0AC	1	Bit 0 of PHY Address, PHYAD[0], OR Activity LED

Table 8-3. ICS1893BF Configuration Pins

Signal Name	Pin No.	Signal Description
10/100	9	Output Indication, High=100baseTX Operation
AMDIX_EN	10	Auto-MDIX Enable (built-in internal 50K Ohm pull-up)
100TCSR	20	100M Transmit Current Set Resistors
10TCSR	19	10M Transmit Current Set Resistor

Copyright © 2009, IDT, Inc.
All rights reserved.

Table 8-3. ICS1893BF Configuration Pins

Signal Name	Pin No.	Signal Description
REF_IN	47	Frequency Reference Input: 25 MHz Input Clock or Crystal
REF_OUT	46	Frequency Reference Output for Crystal
RESETn	23	System Reset (active low)

8.2.1 Transformer Interface Pins

Transformer connections on the ICS1893BF signals TP_AP, TP_AN, TP_BP and TP_BN are shown in Table 8.4. The previous TP_CT pin on the ICS1893AF is not used with the ICS1893BF. The typical Twisted Pair Transformers connections are shown in Chapter 5. The transformer must be 1:1 ratio and symetrical for 10/100 MDI/MDIX applications since the transmit twisted pair and receive twisted pair are interchangeable. ICS1893 PHYs do not have power connections to the transformer. All transformer power is supplied by the ICS1893. Note the twisted pair are polarity sensitive and must connect to the RJ45 with the same polarity as shown in the figure.

Table 8-4 lists the pins for the transformer interface group of pins.

Table 8-4. ICS1893BF Transformer Interface Pins

Signal Name	Pin No.	Signal Description
TP_AP	12	Twisted Pair A Positive
TP_AN	13	Twisted Pair A Negative
TP_BP	16	Twisted Pair B Positive
TP_BN	15	Twisted Pair B Negative

8.2.2 Multi-Function (Multiplexed) Pins: PHY Address and LED Pins

Table 8-5 lists the pins for the multi-function group of pins (that is, the multiplexed PHY Address / LED pins).

Note:

1. During either a power-on reset or a hardware reset, each multi-function configuration pin is an input that is sampled when the ICS1893BF exits the reset state. After sampling is complete, these pins are output pins that can drive status LEDs.
2. A software reset does not affect the state of a multi-function configuration pin. During a software reset, all multi-function configuration pins are outputs.
3. Each multi-function configuration pin must be pulled either up or down with a resistor to establish the address of the ICS1893BF. LEDs placed in series with these resistors provide a designated status indicator.

   Caution: All pins listed in Table 8-5 must not float.

4. As outputs, the asserted state of a multi-function configuration pin is the inverse of the sense sampled during reset. This inversion provides a signal that can illuminate an LED during an asserted state. For example, if a multi-function configuration pin is pulled down to ground through an LED and a current-limiting resistor, then the sampled sense of the input is low. To illuminate an LED for the asserted state requires the output to be high.

Copyright © 2009, IDT, Inc.
All rights reserved.

Note: Each of these pins monitor the data link by providing signals that directly drive LEDs.

Table 8-5. PHY Address and LED Pins

Pin Name	Pin Number	Pin Type	Pin Description
P0AC	1	Input or Output	**PHY (Address Bit) 0 / Activity LED.** For more information on this pin, see Section 5.5, "Status Interface". • This multi-function configuration pin is: – An input pin during either a power-on reset or a hardware reset. In this case, this pin configures the ICS1893BF PHY address Bit 0. – An output pin following reset. In this case, this pin provides indication of Receive "OR" Transmit activity. As an input pin: • This pin establishes the address for the ICS1893BF. When the signal on this pin is logic: – Low, that address bit is set to logic zero. – High, that address bit is set to logic one. As an output pin: • When the signal on this pin is: – De-asserted, this state indicates the ICS1893BF does not have activity. – Asserted, this state indicates the ICS1893BF has activity. **Caution:** This pin must not float. (See the notes at Section 8.2.2, "Multi-Function (Multiplexed) Pins: PHY Address and LED Pins".)
P1CL	3	Input or Output	**PHY (Address Bit) 1 / Collision LED.** For more information on this pin, see Section 5.5, "Status Interface". • This multi-function configuration pin is: – An input pin during either a power-on reset or a hardware reset. In this case, this pin configures the ICS1893BF PHY Address Bit 1. – An output pin following reset. In this case, this pin provides collision status for the ICS1893BF. As an input pin: • This pin establishes the address for the ICS1893BF. When the signal on this pin is Logic: – Low, that address bit is set to logic zero. – High, that address is set to logic one. As an output pin: • When the signal on this pin is: – De-asserted, this state indicates the ICS1893BF does not detect any collisions. – Asserted, this state indicates the ICS1893BF detects collisions. • The ICS1893BF asserts its Collision LED for a period of approximately 70 msec when it detects a collision. **Caution:** This pin must not float. (See the notes at Section 8.2.2, "Multi-Function (Multiplexed) Pins: PHY Address and LED Pins".)

Copyright © 2009, IDT, Inc.
All rights reserved.

Table 8-5. PHY Address and LED Pins

Pin Name	Pin Number	Pin Type	Pin Description
P2LI	4	Input or Output	**PHY (Address Bit) 2 / Link Integrity LED.** For more information on this pin, see Section 5.5, "Status Interface". • This multi-function configuration pin is: – An input pin during either a power-on reset or a hardware reset. In this case, this pin configures the address of the ICS1893BF PHY Address Bit 2. – An output pin following reset. In this case, this pin provides link status for the ICS1893BF. As an input pin: • This pins establishes the address for the ICS1893BF. When the signal on this pin is logic: – Low, that address bit is set to logic zero. – High, that address bit is set to logic one. As an output pin: • When the signal on this pin is: – De-asserted, this state indicates the ICS1893BF does not have a link. – Asserted, this state indicates the ICS1893BF has a valid link. **Caution:** This pin must not float. (See the notes at Section 8.2.2, "Multi-Function (Multiplexed) Pins: PHY Address and LED Pins".)
P3TD	6	Input or Output	**PHY (Address Bit) 3 / Transmit Data LED.** For more information on this pin, see Section 5.5, "Status Interface". • These multi-function configuration pins are: – Input pins during either a power-on reset or a hardware reset. In this case, these pins configure the address of the ICS1893BF PHY Address Bit 3. – Output pins following reset. In this case, this pin provides indication of Transmit activity. As an input pin: • This pin establishes the address for the ICS1893BF. When the signal on one of these pins is logic: – Low, that address bit is set to logic zero. – High, that address bit is set to logic one. As an output pin: • When the signal on this pin is: – De-asserted, this state indicates the ICS1893BF does not have Transmit activity. – Asserted, this state indicates the ICS1893BF has Transmit activity. **Caution:** This pin must not float. (See the notes at Section 8.2.2, "Multi-Function (Multiplexed) Pins: PHY Address and LED Pins".)

Copyright © 2009, IDT, Inc.
All rights reserved.

Table 8-5. PHY Address and LED Pins

Pin Name	Pin Number	Pin Type	Pin Description
P4RD	8	Input or Output	**PHY (Address Bit) 4 / Receive Data LED.** For more information on this pin, see Section 5.5, "Status Interface". • This multi-function configuration pin is: – An input pin during either a power-on reset or a hardware reset. In this case, this pin configures the ICS1893BF when it is in either hardware mode or software mode. – An output pin following reset. In this case, this pin provides activity status of the ICS1893. An an input pin: • This pin establishes the address for the ICS1893BF. When the signal on this pin is logic: – Low, that address bit is set to logic zero. – High, that address bit is set to logic one. As an output pin: • When the signal on this pin is: – De-asserted, this state indicates the ICS1893BF does not have Receive activity. – Asserted, this state indicates the ICS1893BF has Receive activity. **Caution:** This pin must not float. (See the notes at Section 8.2.2, "Multi-Function (Multiplexed) Pins: PHY Address and LED Pins".)

Copyright © 2009, IDT, Inc.
All rights reserved.

8.2.3 Configuration Pins

Table 8-6 lists the configuration pins.

Table 8-6. Configuration Pins

Pin Name	Pin Number	Pin Type	Pin Description
10/100SEL	9	Output	**10Base-T / 100Base-TX Select.** • This pin acts as an output that indicates the current status of this pin. In this case, when the signal on this pin is logic: – Low, this pin indicates 10Base-T operations are selected. – High, this pin indicates 100Base-TX operations are selected.
10TCSR	19	Output	**10M Transmit Current Set Resistor.** • A resistor, connected between this pin and ground, is required to establish the value of the transmit current used in 10Base-T mode. • The value and tolerance of this resistor is specified in Section 9.3, “Recommended Component Values”.
100TCSR	20	Output	**100M Transmit Current Set Resistor.** • A resistor, connected between this pin and ground, is required to establish the value of the transmit current used in 100Base-TX mode. • The value and tolerance of this resistor is specified in Section 9.3, “Recommended Component Values”.
REF_IN	47	Input	**(Frequency) Reference Input.** This pin is connected to a 25-MHz oscillator. For a tolerance, see Section 9.5.1, “Timing for Clock Reference In (REF_IN) Pin”.
REF_OUT	46	Output	**(Frequency) Reference Output.** This pin is used with a crystal.
RESETn	23	Input	**(System) Reset (*Active Low*).** • When the signal on this active-low pin is logic: – Low, the ICS1893BF is in hardware reset. – High, the ICS1893BF is operational. • For more information on hardware resets, see the following: – Section 4.1.2.1, “Hardware Reset” – Section 9.5.16, “Reset: Hardware Reset and Power-Down”

Copyright © 2009, IDT, Inc.
All rights reserved.

8.2.4 MAC Interface Pins

This section lists pin descriptions for each of the following interfaces

- Section 8.2.4.1, “MAC Interface Pins for Media Independent Interface”

8.2.4.1 MAC Interface Pins for Media Independent Interface

Table 8-7 lists the MAC Interface pin descriptions for the MII.

Table 8-7. MAC Interface Pins: Media Independent Interface (MII)

Pin Name	Pin Number	Pin Type	Pin Description
COL	43	Output	**Collision (Detect).** The ICS1893BF asserts a signal on the COL pin when the ICS1893BF detects receive activity while transmitting (that is, while the TXEN signal is asserted by the MAC, that is, when transmitting). When the mode is: • 10Base-T, the ICS1893BF detects receive activity by monitoring the un-squelched MDI receive signal. • 100Base-TX, the ICS1893BF detects receive activity when there are two non-contiguous zeros in any 10-bit symbol derived from the MDI receive data stream. **Note:** 1. The signal on the COL pin is not synchronous to either RXCLK or TXCLK. 2. In full-duplex mode, the COL signal is disabled and always remains low. 3. The COL signal is asserted as part of the signal quality error (SQE) test. This assertion can be suppressed with the SQE Test Inhibit bit (bit 18.2).
CRS	44	Output	**Carrier Sense.** When the ICS1893BF mode is: • Half-duplex, the ICS1893BF asserts a signal on its CRS pin when it detects either receive or transmit activity. • Either full-duplex or Repeater mode, the ICS1893BF asserts a signal on its CRS pin only in response to receive activity. **Note:** The signal on the CRS pin is not synchronous to the signal on either the RXCLK or TXCLK pin.
MDC	27	Input	**Management Data Clock.** The ICS1893BF uses the signal on the MDC pin to synchronize the transfer of management information between the ICS1893BF and the Station Management Entity (STA), using the serial MDIO data line. The MDC signal is sourced by the STA.

Copyright © 2009, IDT, Inc.
All rights reserved.

Table 8-7. MAC Interface Pins: Media Independent Interface (MII) (*Continued*)

Pin Name	Pin Number	Pin Type	Pin Description
MDIO	26	Input/ Output	**Management Data Input/Output.** The signal on this pin can be tri-stated and can be driven by one of the following: • A Station Management Entity (STA), to transfer command and data information to the registers of the ICS1893BF. • The ICS1893BF, to transfer status information. All transfers and sampling are synchronous with the signal on the MDC pin. **Note:** If the ICS1893BF is to be used in an application that uses the mechanical MII specification, MDIO must have a 1.5 kΩ ±5% pull-up resistor at the ICS1893BF end and a 2 kΩ ±5% pull-down resistor at the station management end. (These resistors enable the station management to determine if the connection is intact.)
RXCLK	34	Output	**Receive Clock.** The ICS1893BF sources the RXCLK to the MAC interface. The ICS1893BF uses RXCLK to synchronize the signals on the following pins: RXD[3:0], RXDV, and RXER. The following table contrasts the behavior on the RXCLK pin when the mode for the ICS1893BF is either 10Base-T or 100Base-TX.

10Base-T	100Base-TX
The RXCLK frequency is 2.5 MHz.	The RXCLK frequency is 25 MHz.
The ICS1893BF generates its RXCLK from the MDI data stream using a digital PLL. When the MDI data stream terminates, the PLL continues to operate, synchronously referenced to the last packet received.	The ICS1893BF generates its RXCLK from the MDI data stream while there is a valid link (that is, either data or IDLEs). In the absence of a link, the ICS1893BF uses the REF_IN clock to generate the RXCLK.
The ICS1893BF switches between clock sources during the period between when its CRS is asserted and prior to its RXDV being asserted. While the ICS1893BF is locking onto the incoming data stream, a clock phase change of up to 360 degrees can occur.	While the ICS1893BF is bringing up a link, a clock phase change of up to 360 degrees can occur.
The RXCLK aligns once per packet.	The RXCLK aligns once, when the link is being established.

Note: The signal on the RXCLK pin is conditioned by the RXTRI pin.

Copyright © 2009, IDT, Inc.
All rights reserved.

Table 8-7. MAC Interface Pins: Media Independent Interface (MII) (*Continued*)

Pin Name	Pin Number	Pin Type	Pin Description
RXD0 RXD1 RXD2 RXD3	31 30 29 28	Output	**Receive Data 0–3.** • RXD0 is the least-significant bit and RXD3 is the most-significant bit of the MII receive data nibble. • While the ICS1893BF asserts RXDV, the ICS1893BF transfers the receive data signals on the RXD0–RXD3 pins to the MAC Interface synchronously on the rising edges of RXCLK.
RXDV	32	Output	**Receive Data Valid.** The ICS1893BF asserts RXDV to indicate to the MAC that data is available on the MII Receive Bus (RXD[3:0]). The ICS1893BF: • Asserts RXDV after it detects and recovers the Start-of-Stream delimiter, /J/K/. (For the timing reference, see Chapter 9.5.6, "100M/MII Media Independent Interface: Synchronous Receive Timing".) • De-asserts RXDV after it detects either the End-of-Stream delimiter (/T/R/) or a signal error. **Note:** RXDV is synchronous with the Receive Data Clock, RXCLK.
RXER	35	Output	**Receive Error.** When the MAC Interface is in: • 10M MII mode, RXER is not used. • 100M MII mode, the ICS1893BF asserts a signal on the RXER pin when either of the following two conditions are true: – Errors are detected during the reception of valid frames – A False Carrier is detected **Note:** 1. An ICS1893BF asserts a signal on the RXER pin upon detection of a False Carrier so that repeater applications can prevent the propagation of a False Carrier. 2. The RXER signal always transitions synchronously with RXCLK. 3. The signal on RXER pin is conditioned by the RXTRI pin.
TXCLK	37	Output	**Transmit Clock.** The ICS1893BF generates this clock signal to synchronize the transfer of data from the MAC Interface to the ICS1893BF. When the mode is: • 10Base-T, the TXCLK frequency is 2.5 MHz. • 100Base-TX, the TXCLK frequency is 25 MHz.

Copyright © 2009, IDT, Inc.
All rights reserved.

Table 8-7. MAC Interface Pins: Media Independent Interface (MII) (*Continued*)

Pin Name	Pin Number	Pin Type	Pin Description
TXD0 TXD1 TXD2 TXD3	39 40 41 42	Input	**Transmit Data 0–3.** • TXD0 is the least-significant bit and TXD3 is the most-significant bit of the MII transmit data nibble received from the MAC. • The ICS1893BF samples its TXEN signal to determine when data is available for transmission. When TXEN is asserted, the signals on a the TXD[3:0] pins are sampled synchronously on the rising edges of the TXCLK signal.
TXEN	38	Input	**Transmit Enable.** In MII mode: • The ICS1893BF samples its TXEN signal to determine when data is available for transmission. When TXEN is asserted, the ICS1893BF begins sampling the data nibbles on the transmit data lines TXD[3:0] synchronously with TXCLK. The ICS1893BF then transmits this data over the media. • Following the de-assertion of TXEN, the ICS1893BF terminates transmission of nibbles over the media.

Copyright © 2009, IDT, Inc.
All rights reserved.

8.2.5 Ground and Power Pins

Table 8-8. Ground and Power Pins

Signal Name	Pin No.	Signal Description
		Power
VDD	7	3.3V
VDD	14	3.3V
VDD	18	3.3V
VDD	22	3.3V
VDD	24	3.3V
VDD	33	3.3V
VDD	45	3.3V
VDD	48	3.3V
		Ground
VSS	2	
VSS	5	
VSS	11	
VSS	17	
VSS	21	
VSS	25	
VSS	36	

Copyright © 2009, IDT, Inc.
All rights reserved.

8.3 ICS1893BK Pin Diagram with MDIX Pinout (56L, 8x8 MLF2)

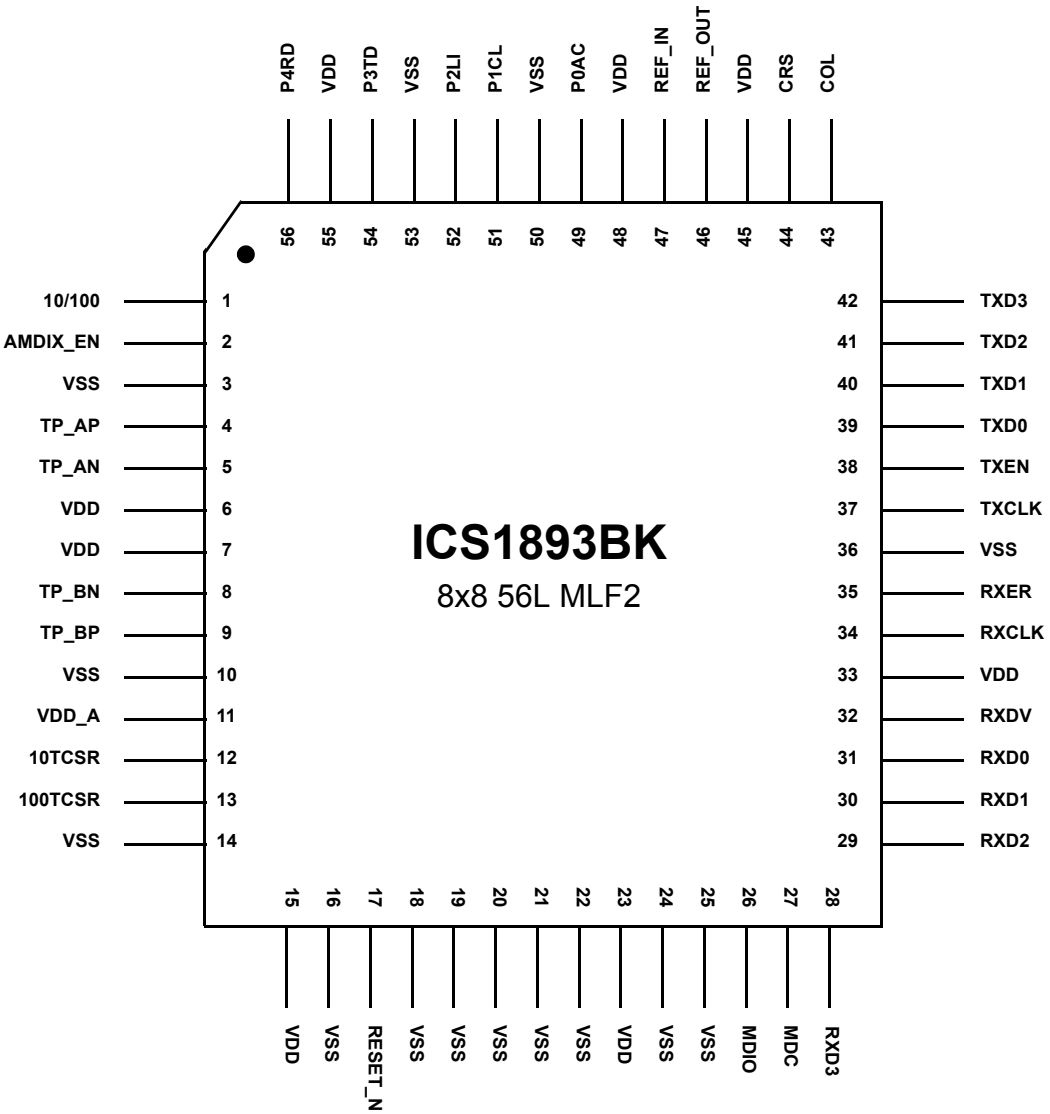

Copyright © 2009, IDT, Inc.
All rights reserved.

8.3.1 ICS1893BK Pin Descriptions

The ICS1893BK Pin Signal Descriptions are identical in function to the ICS1893BF except for the Pin Numbers. See section 8.1 for descriptions.

Table 8-9. ICS1893BK MAC Interface Pins

Signal Name	Pin No.	Description
MDIO	26	Management Data Input/Output
MDC	27	Management Data Clock
RXD3	28	Receive Data 3
RXD2	29	Receive Data 2
RXD1	30	Receive Data 1
RXD0	31	Receive Data 0
RXDV	32	Receive Data Valid
RXCLK	34	Receive Clock
RXER	35	Receive Error
TXCLK	37	Transmit Clock
TXEN	38	Transmit Enable
TXD0	39	Transmit Data 0
TXD1	40	Transmit Data 1
TXD2	41	Transmit Data 2
TXD3	42	Transmit Data 3
COL	43	Collision Detect
CRS	44	Carrier Sense

Table 8-10. ICS1893BK Multifunction Pins: PHY Address and LED Pins

Signal Name	Pin No.	Signals Description
P4RD	56	PHYAD[4] / Receive LED
P3TD	54	PHYAD[3] / Transmit LED
P2LI	52	PHYAD[2] / Link LED
P1CL	51	PHYAD[1] / Collision LED
P0AC	49	PHYAD[0] / Activity LED

Table 8-11. ICS1893BK Configuration Pins

Signal Name	Pin No.	Signals Description
10/100	1	Output Speed indication, High=100baseTX
AMDIX_EN	2	Auto-MDIX Enable (built-in internal 50K Ohm pull-up)
10TCSR	12	10M Transmit Amplitude Current Set Resistor
100TCSR	13	100M Transmit Amplitude Current Set Resistor

Copyright © 2009, IDT, Inc.
All rights reserved.

Table 8-11. ICS1893BK Configuration Pins

Signal Name	Pin No.	Signals Description
REF_IN	47	Frequency Ref Input: 25MHz Clock or Crystal
REF_OUT	46	Frequency Ref Output for Crystal
RESETn	17	System Reset (active low)

8.3.2 Transformer Interface Pins

Transformer connections on the ICS1893BK signals TP_AP, TP_AN, TP_BP and TP_BN are shown in Table 8-12. The previous TP_CT pin used on the ICS1893AF is not used with the ICS1893BK. The typical Twisted Pair Transformers connections are shown in Chapter 5. The transformer must be 1:1 ratio and symetrical for 10/100 MDI/MDIX applications since the transmit twisted pair and receive twisted pair are interchangeable. ICS1893 PHYs do not have power connections to the Transformer. All transformer power is supplied by the ICS1893BK.

Note the twisted pairs are polarity sensitive and must connect to the RJ45 with the same polarity as shown in the figure. Pay particular attention to polarity of the the “B” pair being reversed in pad sequence.

Table 8-12. ICS1893BK Transformer Interface Pins

Signal Name	Pin No.	Signals Description
TP_AP	4	Twisted Pair A Positive
TP_AN	5	Twisted Pair A Negative
TP_BP	9	Twisted Pair B Positive
TP_BN	8	Twisted Pair B Negative

Copyright © 2009, IDT, Inc.
All rights reserved.

8.3.3 Ground and Power Pins

Table 8-13. ICS1893BK Ground and Power Pins

Signal Name	Pin No.	Signals Description
VDD	6	Power 3.3V
VDD	7	Power 3.3V
VDD	11	Power 3.3V
VDD	15	Power 3.3V
VDD	23	Power 3.3V
VDD	33	Power 3.3V
VDD	45	Power 3.3V
VDD	48	Power 3.3V
VDD	55	Power 3.3V
VSS	3	Ground
VSS	10	Ground
VSS	14	Ground
VSS	16	Ground
VSS	18	Ground
VSS	19	Ground
VSS	20	Ground
VSS	21	Ground
VSS	22	Ground
VSS	24	Ground
VSS	25	Ground
VSS	36	Ground
VSS	50	Ground
VSS	53	Ground

Copyright © 2009, IDT, Inc.
All rights reserved.

Chapter 9 DC and AC Operating Conditions

9.1 Absolute Maximum Ratings

Table 9-1 lists absolute maximum ratings. Stresses above these ratings can permanently damage the ICS1893BF. These ratings, which are standard values for IDT commercially rated parts, are stress ratings only. Functional operation of the ICS1893BF at these or any other conditions above those indicated in the operational sections of the specifications is not implied. Exposure to absolute maximum rating conditions for extended periods can affect product reliability. Electrical parameters are guaranteed only over the range of the recommended operating temperature.

Table 9-1. Absolute Maximum Ratings for ICS1893BF

Item	Rating
VDD (measured to VSS)	-0.3 V to 3.6V
Digital Inputs / Outputs	-0.3 V to VDD +0.3 V
Storage Temperature	-55° C to +150° C
Junction Temperature	125° C
Soldering Temperature	260° C
Power Dissipation	See Section 9.4.1, “DC Operating Characteristics for Supply Current”

9.2 Recommended Operating Conditions

Table 9-2. Recommended Operating Conditions for ICS1893BF

Parameter	Symbols	Min.	Max.	Units
Ambient Operating Temperature - Commercial	T_A	0	+70	°C
Ambient Operating Temperature - Industrial	T_A	-40	+85	°C
Power Supply Voltage (measured to VSS)	VDD	+3.14	+3.47	V

Copyright © 2009, IDT, Inc.
All rights reserved.

9.3 Recommended Component Values

Table 9-3. Recommended Component Values for ICS1893BF

Parameter	Minimum	Typical	Maximum	Tolerance	Units
Oscillator Frequency	–	25	–	± 50 ppm †	MHz
10TCSR Resistor Value	–	2.00k	–	1%	Ω
100TCSR Resistor Value	–	See Figure 9-1	–	1%	Ω
LED Resistor Value	510	1k	10k	–	Ω

† There are two IEEE Std. 802.3 requirements that drive the tolerance for the frequency of the oscillator.

- Clause 22.2.2.1 requires the MII TX_CLK to have an accuracy of ± 100 ppm.
- Clause 24.2.3.4 is more stringent. It requires the code-bit timer to have an accuracy of 0.005% (that is, ±50 ppm).

Figure 9-1. ICS1893BF 10TCSR and 100TCSR

Typical Board Layouts

10TCSR and 100TCSR Bias Resistors

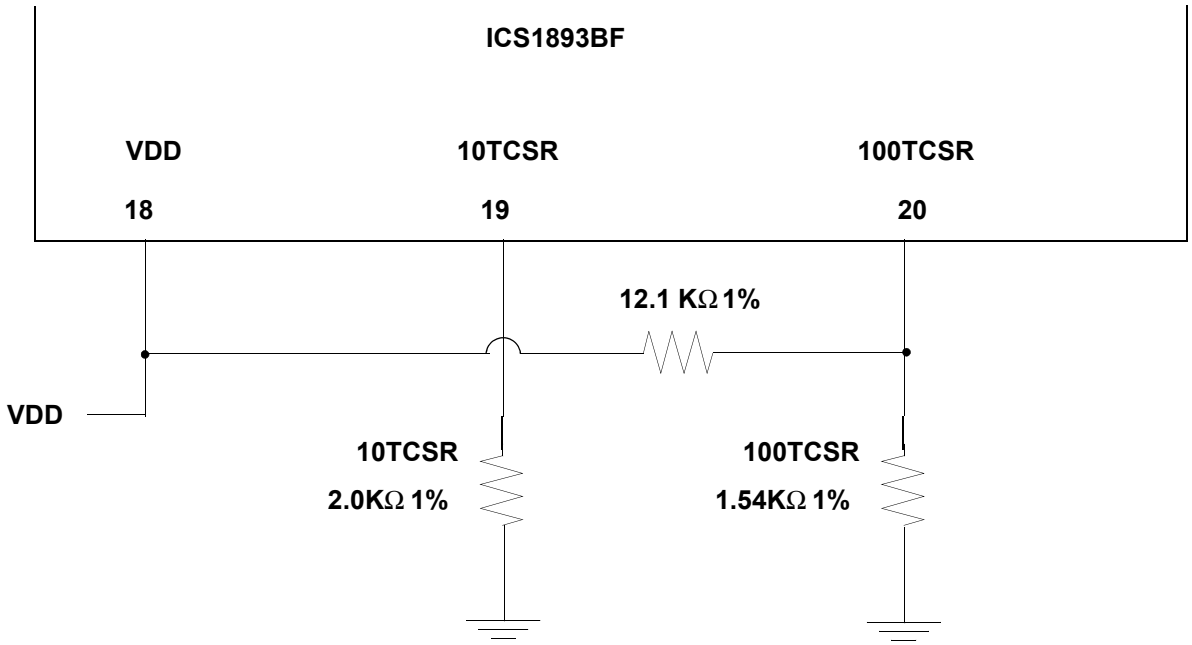

Note:

1. The bias resistor networks set the 10baseT and 100baseTX output amplitude levels.
2. Amplitude is directly related to current sourced out of the 10TCSR and 100TCSR pins.
3. Resistor values shown above are typical. User should check amplitudes and adjust for transformer.
4. The VDD connection to the 12.1K resistor can connect to any VDD. The 12.1K resistor provides negative feedback to compensate for VDD changes. Lowering the 12.1K value will lower the 100baseT amplitude.
5. The ICS1893BF 10baseT amplitude is below the IEEE spec but is adequate for 200m operation. This is the effect of additional MUXes added for the Auto-MDIX function.

Copyright © 2009, IDT, Inc.
All rights reserved.

9.4 DC Operating Characteristics

This section lists the ICS1893BF DC operating characteristics.

9.4.1 DC Operating Characteristics for Supply Current

Table 9-4 lists the DC operating characteristics for the supply current to the ICS1893BF under various conditions.

Note: All VDD_IO measurements are taken with respect to VSS (which equals 0 V).

Table 9-4. DC Operating Characteristics for Supply Current

Parameter	Operating Mode	Symbol	Min.	Typ.	Max.	Units
Supply Current†	100Base-TX‡	IDD_IO	–	8	11	mA
		IDD	–	110	125	mA
Supply Current†	10Base-T‡	IDD_IO	–	5	8	mA
		IDD	–	150	160	mA
Supply Current†	Auto-Negotiation	IDD_IO	–	5	8	mA
		IDD	–	80	90	mA
Supply Current†	Power-Down	IDD_IO	–	3	5	mA
		IDD	–	4	5	mA
Supply Current†	Reset	IDD	–	10	11	mA

† These supply current parameters are measured through VDD pins to the ICS1893BF. The supply current parameters include external transformer currents.

‡ Measurements taken with 100% data transmission and the minimum inter-packet gap.

9.4.2 DC Operating Characteristics for TTL Inputs and Outputs

Table 9-5 lists the 3.3-V DC operating characteristics of the ICS1893BF TTL inputs and outputs.

Note: All VDD_IO measurements are taken with respect to VSS (which equals 0 V).

Table 9-5. 3.3-V DC Operating Characteristics for TTL Inputs and Outputs

Parameter	Symbol	Conditions		Min.	Max.	Units
TTL Input High Voltage	V_{IH}	VDD_IO = 3.47 V	–	2.0	–	V
TTL Input Low Voltage	V_{IL}	VDD_IO = 3.47 V	–	–	0.8	V
TTL Output High Voltage	V_{OH}	VDD_IO = 3.14 V	I_{OH} = –4 mA	2.4	–	V
TTL Output Low Voltage	V_{OL}	VDD_IO = 3.14 V	I_{OL} = +4 mA	–	0.4	V
TTL Driving CMOS, Output High Voltage	V_{OH}	VDD_IO = 3.14 V	I_{OH} = –4 mA	2.4	–	V
TTL Driving CMOS, Output Low Voltage	V_{OL}	VDD_IO = 3.14 V	I_{OL} = +4 mA	–	0.4	V

Copyright © 2009, IDT, Inc.
All rights reserved.

9.4.3 DC Operating Characteristics for REF_IN

Table 9-6 lists the 3.3-V DC characteristics for the REF_IN pin.

Note: The REF_IN input switch point is 50% of VDD.

Table 9-6. 3.3-V DC Operating Characteristics for REF_IN

Parameter	Symbol	Test Conditions	Min.	Max.	Units
Input High Voltage	V_{IH}	VDD_IO = 3.47 V	2.97	–	V
Input Low Voltage	V_{IL}	VDD_IO = 3.14 V	–	0.33	V

9.4.4 DC Operating Characteristics for Media Independent Interface

Table 9-7 lists DC operating characteristics for the Media Independent Interface (MII) for the ICS1893BF.

Table 9-7. DC Operating Characteristics for Media Independent Interface

Parameter	Conditions	Minimum	Typical	Maximum	Units
MII Input Pin Capacitance	–	–	–	8	pF
MII Output Pin Capacitance	–	–	–	14	pF
MII Output Drive Impedance	VDD_IO = 3.3V	–	60	–	Ω

Copyright © 2009, IDT, Inc.
All rights reserved.

9.5 Timing Diagrams

9.5.1 Timing for Clock Reference In (REF_IN) Pin

Table 9-8 lists the significant time periods for signals on the clock reference in (REF_IN) pin. Figure 9-2 shows the timing diagram for the time periods.

Note: The REF_IN switching point is 50% of VDD.

Table 9-8. REF_IN Timing

Time Period	Parameter	Conditions	Min.	Typ.	Max.	Units
t1	REF_IN Duty Cycle	–	45	50	55	%
t2	REF_IN Period	–	–	40	–	ns

Figure 9-2. REF_IN Timing Diagram

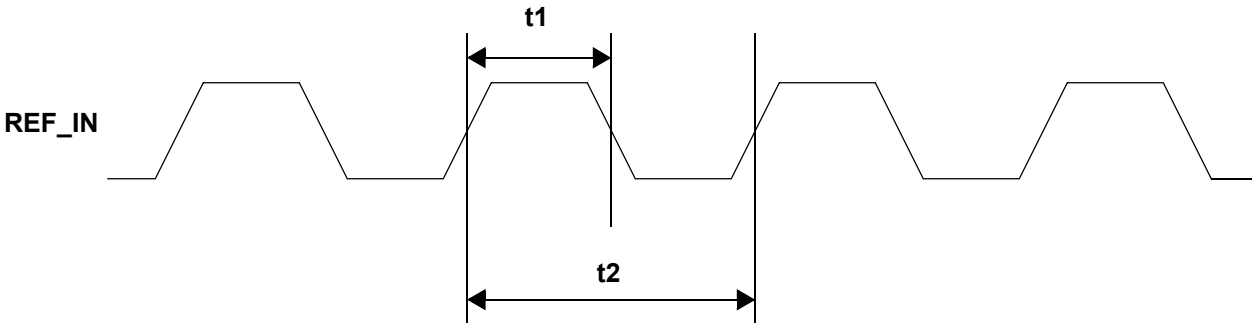

Copyright © 2009, IDT, Inc.
All rights reserved.

9.5.2 Timing for Transmit Clock (TXCLK) Pins

Table 9-9 lists the significant time periods for signals on the Transmit Clock (TXCLK) pins for the various interfaces. Figure 9-3 shows the timing diagram for the time periods.

Table 9-9. Transmit Clock Timing

Time Period	Parameter	Conditions	Min.	Typ.	Max.	Units
t1	TXCLK Duty Cycle	–	35	50	65	%
t2a	TXCLK Period	100M MII (100Base-TX)	–	40	–	ns
t2b	TXCLK Period	10M MII (10Base-T)	–	400	–	ns

Figure 9-3. Transmit Clock Timing Diagram

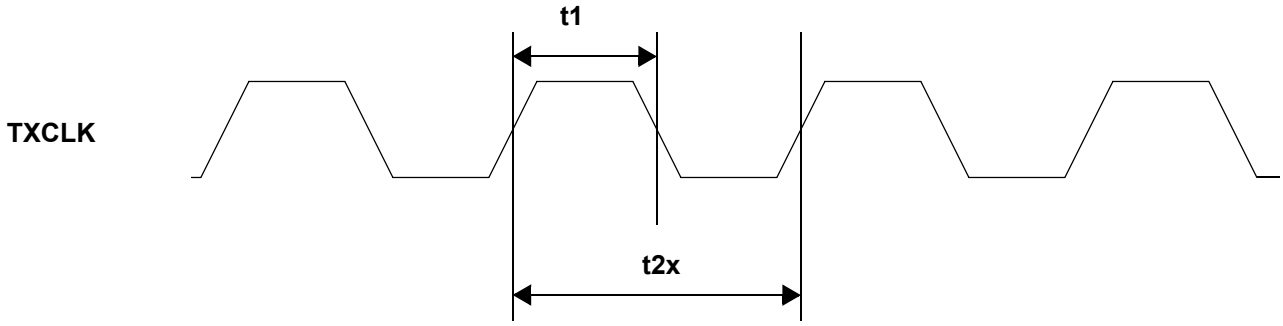

Copyright © 2009, IDT, Inc.
All rights reserved.

9.5.3 Timing for Receive Clock (RXCLK) Pins

Table 9-10 lists the significant time periods for signals on the Receive Clock (RXCLK) pins for the various interfaces. Figure 9-4 shows the timing diagram for the time periods.

Table 9-10. MII Receive Clock Timing

Time Period	Parameter	Conditions	Min.	Typ.	Max.	Units
t1	RXCLK Duty Cycle	–	35	50	65	%
t2a	RXCLK Period	100M MII (100Base-TX)	–	40	–	ns
t2b	RXCLK Period	10M MII (10Base-T)	–	400	–	ns

Figure 9-4. Receive Clock Timing Diagram

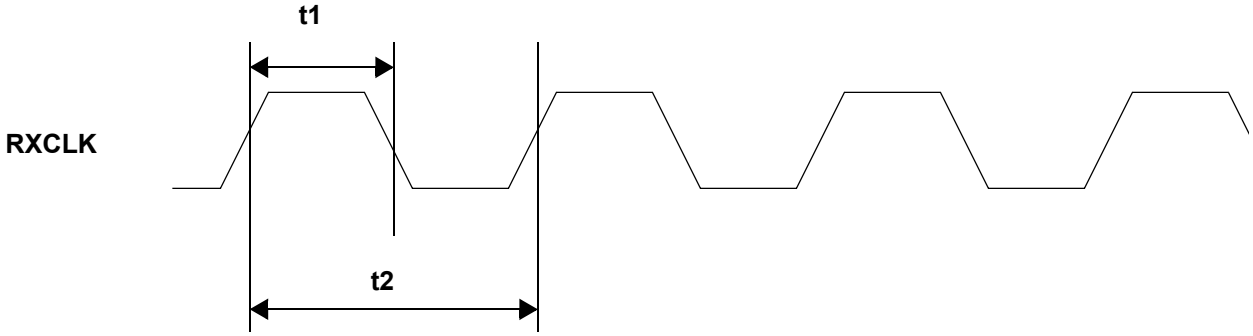

Copyright © 2009, IDT, Inc.
All rights reserved.

9.5.4 100M MII: Synchronous Transmit Timing

Table 9-11 lists the significant time periods for the 100M MII Interface synchronous transmit timing. The time periods consist of timings of signals on the following pins:

- TXCLK
- TXD[3:0]
- TXEN
- TXER

Figure 9-5 shows the timing diagram for the time periods.

Table 9-11. 100M MII / 100M Stream Interface: Synchronous Transmit Timing

Time Period	Parameter	Conditions	Min.	Typ.	Max.	Units
t1	TXD[3:0], TXEN, TXER Setup to TXCLK Rise	–	15	–	–	ns
t2	TXD[3:0], TXEN, TXER Hold after TXCLK Rise	–	0	–	–	ns

Figure 9-5. 100M MII / 100M Stream Interface Synchronous Transmit Timing Diagram

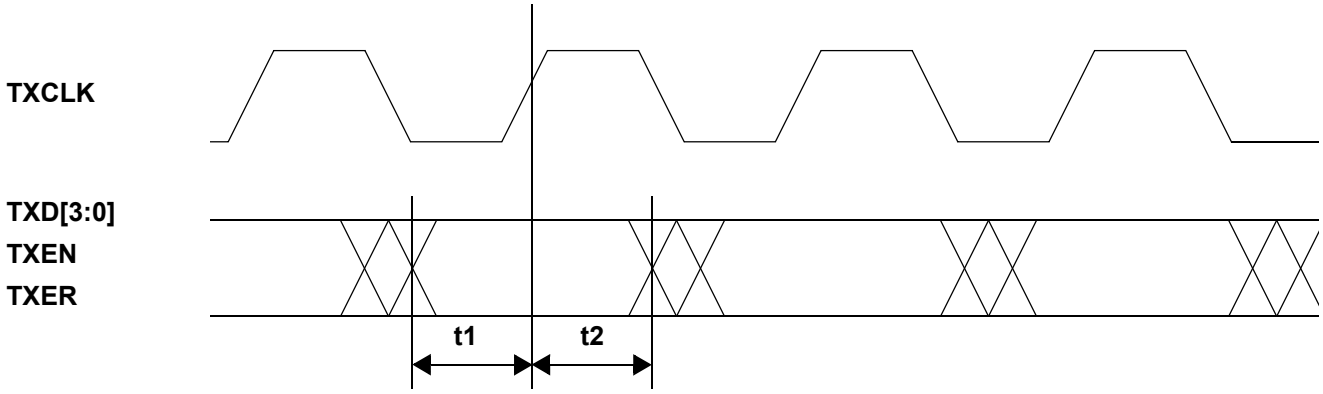

Copyright © 2009, IDT, Inc.
All rights reserved.

9.5.5 10M MII: Synchronous Transmit Timing

Table 9-12 lists the significant time periods for the 10M MII synchronous transmit timing. The time periods consist of timings of signals on the following pins:

- TXCLK
- TXD[3:0]
- TXEN
- TXER

Figure 9-6 shows the timing diagram for the time periods.

Table 9-12. 10M MII: Synchronous Transmit Timing

Time Period	Parameter	Conditions	Min.	Typ.	Max.	Units
t1	TXD[3:0], TXEN, TXER Setup to TXCLK Rise	–	375	–	–	ns
t2	TXD[3:0], TXEN, TXER Hold after TXCLK Rise	–	0	–	–	ns

Figure 9-6. 10M MII Synchronous Transmit Timing Diagram

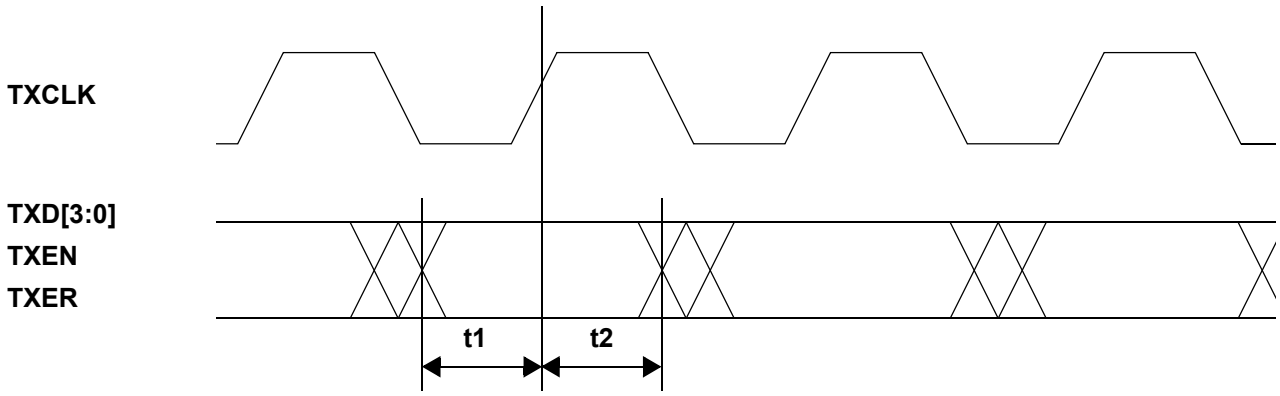

Copyright © 2009, IDT, Inc.
All rights reserved.

9.5.6 100M/MII Media Independent Interface: Synchronous Receive Timing

Table 9-13 lists the significant time periods for the MII / 100M Stream Interface synchronous receive timing. The time periods consist of timings of signals on the following pins:

- RXCLK
- RXD[3:0]
- RXDV
- RXER

Figure 9-7 shows the timing diagram for the time periods.

Table 9-13. MII Interface: Synchronous Receive Timing

Time Period	Parameter	Min.	Typ.	Max.	Units
t1	RXD[3:0], RXDV, and RXER Setup to RXCLK Rise	10.0	–	–	ns
t2	RXD[3:0], RXDV, and RXER Hold after RXCLK Rise	10.0	–	–	ns

Figure 9-7. MII Interface Synchronous Receive Timing Diagram

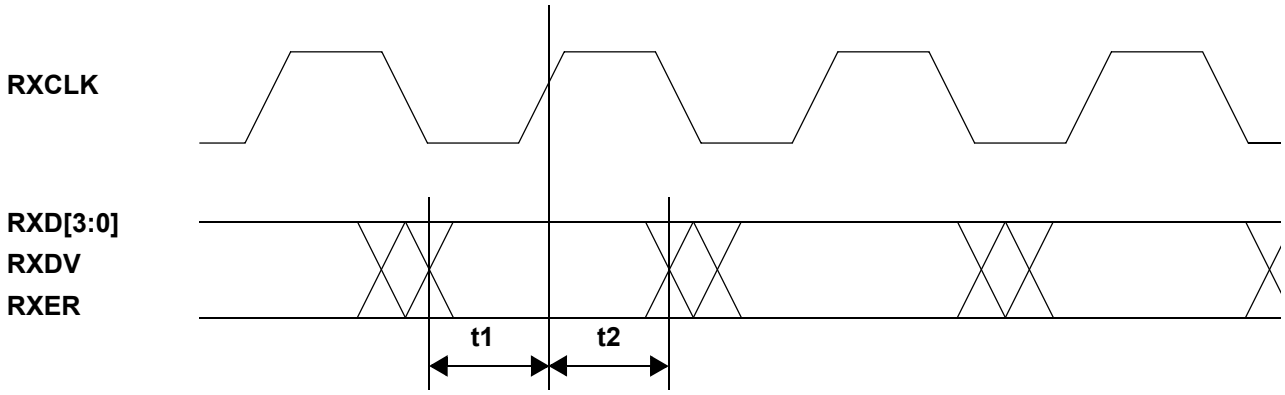

Copyright © 2009, IDT, Inc.
All rights reserved.

9.5.7 MII Management Interface Timing

Table 9-14 lists the significant time periods for the MII Management Interface timing (which consists of timings of signals on the MDC and MDIO pins). Figure 9-8 shows the timing diagram for the time periods.

Table 9-14. MII Management Interface Timing

Time Period	Parameter	Conditions	Min.	Typ.	Max.	Units
t1	MDC Minimum High Time	–	160	–	–	ns
t2	MDC Minimum Low Time	–	160	–	–	ns
t3	MDC Period	–	400†	†	–	ns
t4	MDC Rise Time to MDIO Valid	–	0	–	300	ns
t5	MDIO Setup Time to MDC	–	10	–	–	ns
t6	MDIO Hold Time after MDC	–	10	–	–	ns

† The ICS1893BF is tested at 25 MHz (a 40-ns period) with a 50-pF load. Designs must account for all board loading of MDC.

Figure 9-8. MII Management Interface Timing Diagram

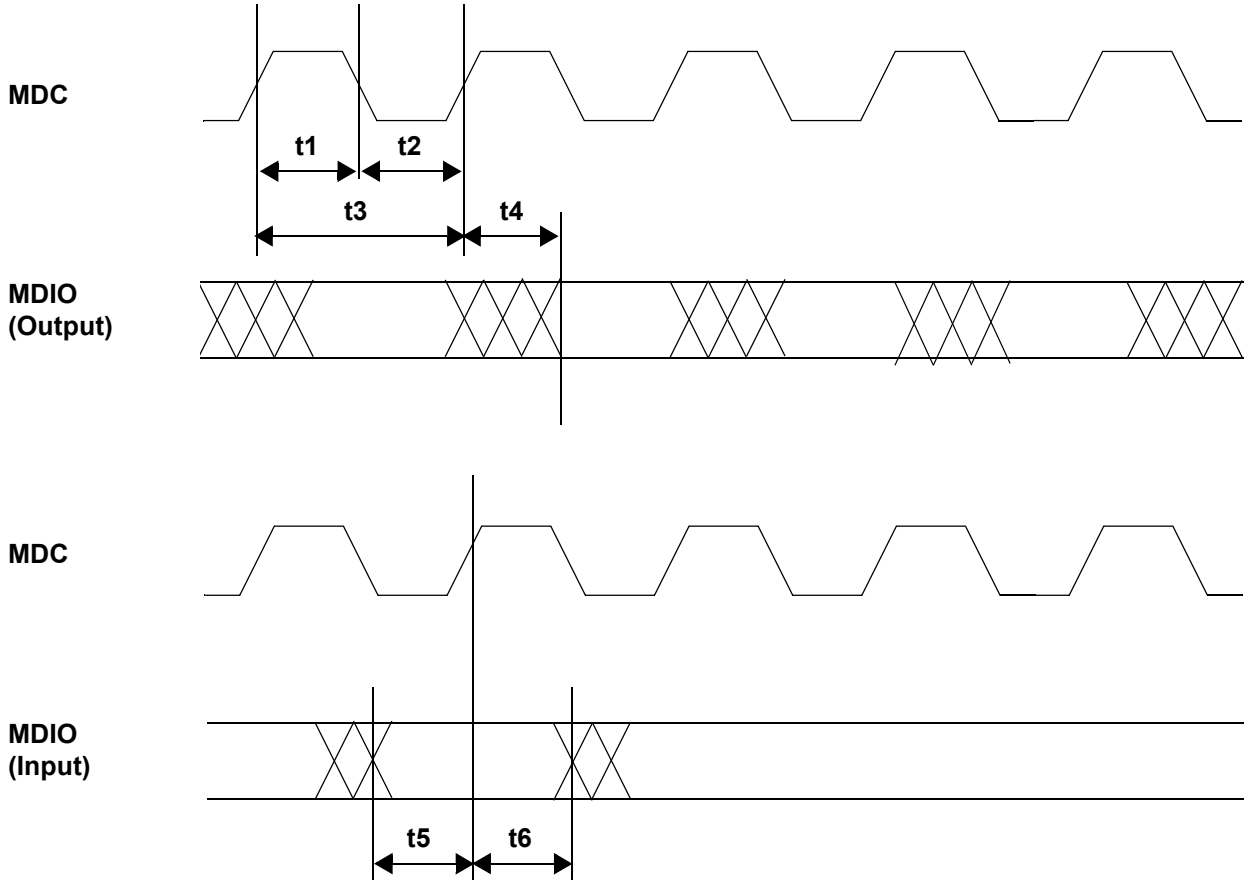

Copyright © 2009, IDT, Inc.
All rights reserved.

9.5.8 10M Media Independent Interface: Receive Latency

Table 9-15 lists the significant time periods for the 10M MII timing. The time periods consist of timings of signals on the following pins:

- TP_RX (that is, the MII TP_RXP and TP_RXN pins)
- RXCLK
- RXD

Figure 9-9 shows the timing diagram for the time periods.

Table 9-15. 10M MII Receive Latency

Time Period	Parameter	Conditions	Min.	Typ.	Max.	Units
t1	First Bit of /5/ on TP_RX to /5/D/ on RXD	10M MII	–	6.5	7	Bit times

Figure 9-9. 10M MII Receive Latency Timing Diagram

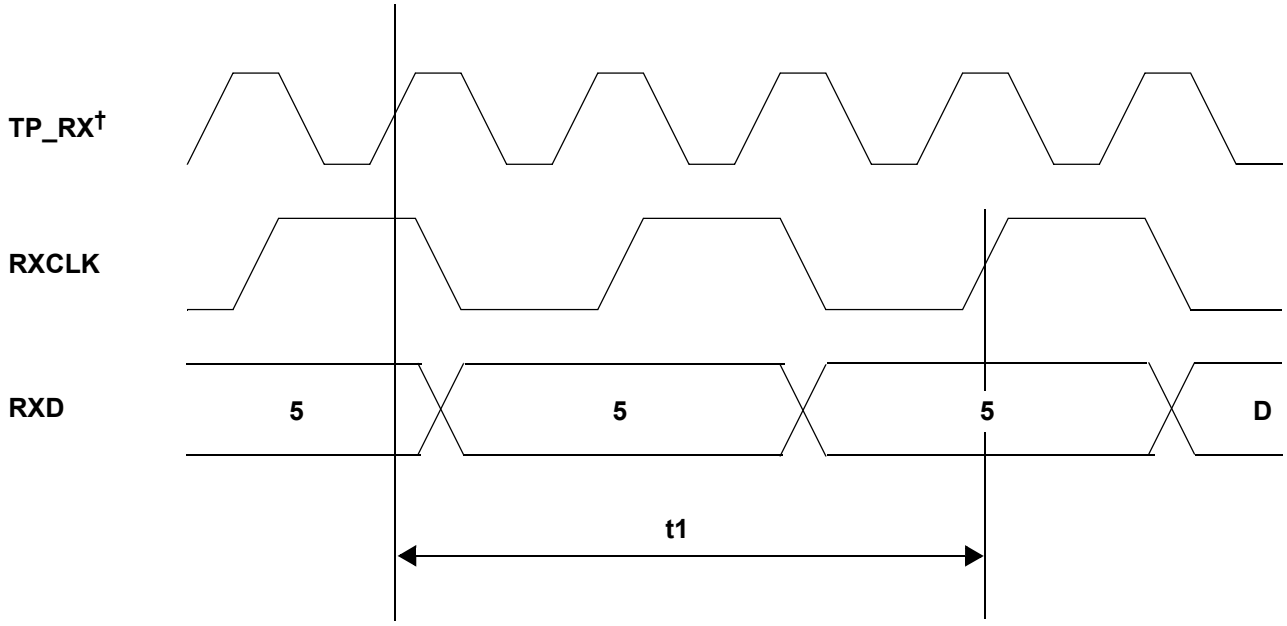

† Manchester encoding is not shown.

Copyright © 2009, IDT, Inc.
All rights reserved.

9.5.9 10M Media Independent Interface: Transmit Latency

Table 9-16 lists the significant time periods for the 10M MII transmit latency. The time periods consist of timings of signals on the following pins:

- TXEN
- TXCLK
- TXD (that is, TXD[3:0])
- TP_TX (that is, TP_TXP and TP_TXN)

Figure 9-10 shows the timing diagram for the time periods.

Table 9-16. 10M MII Transmit Latency Timing

Time Period	Parameter	Conditions	Min.	Typ.	Max.	Units
t1	TXD Sampled to MDI Output of First Bit	10M MII	–	1.2	2	Bit times

Figure 9-10. 10M MII Transmit Latency Timing Diagram

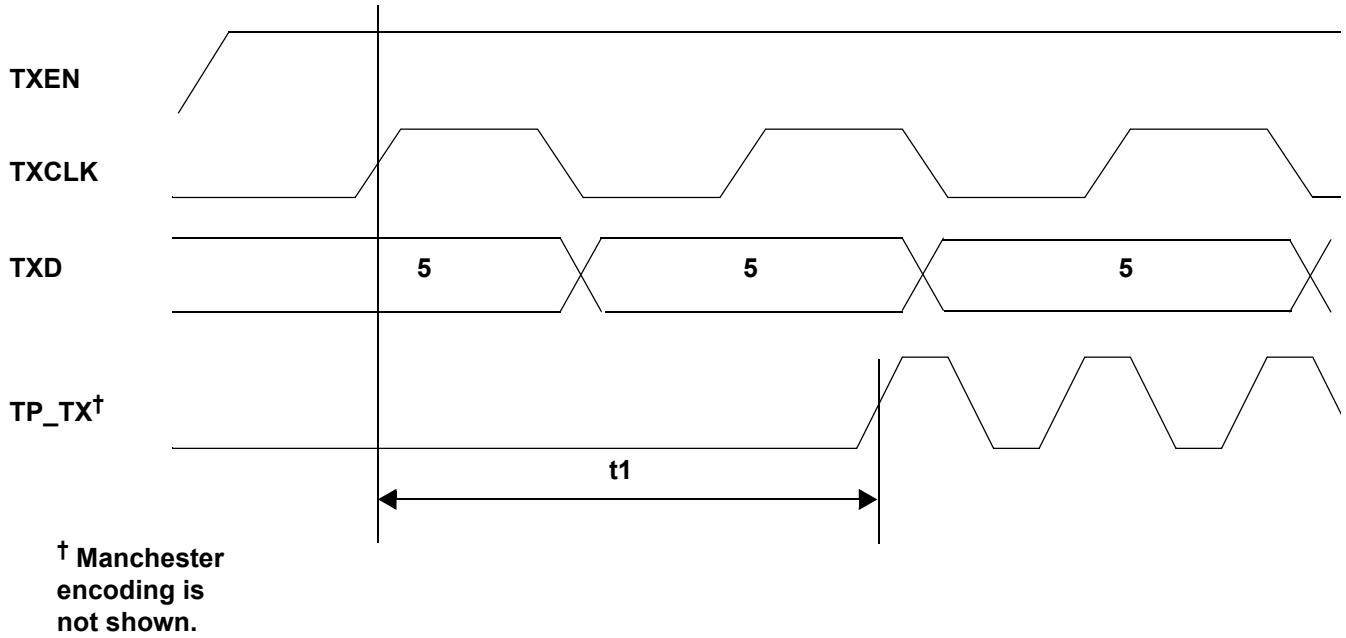

Copyright © 2009, IDT, Inc.
All rights reserved.

9.5.10 100M / MII Media Independent Interface: Transmit Latency

Table 9-17 lists the significant time periods for the MII / 100 Stream Interface transmit latency. The time periods consist of timings of signals on the following pins:

- TXEN
- TXCLK
- TXD (that is, TXD[3:0])
- TP_TX (that is, TP_TXP and TP_TXN)

Figure 9-11 shows the timing diagram for the time periods.

Table 9-17. MII / 100M Stream Interface Transmit Latency

Time Period	Parameter	Conditions	Min.	Typ.	Max.	Units
t1	TXEN Sampled to MDI Output of First Bit of /J/ †	MII mode	–	2.8	3	Bit times

† The IEEE maximum is 18 bit times.

Figure 9-11. MII / 100M Stream Interface Transmit Latency Timing Diagram

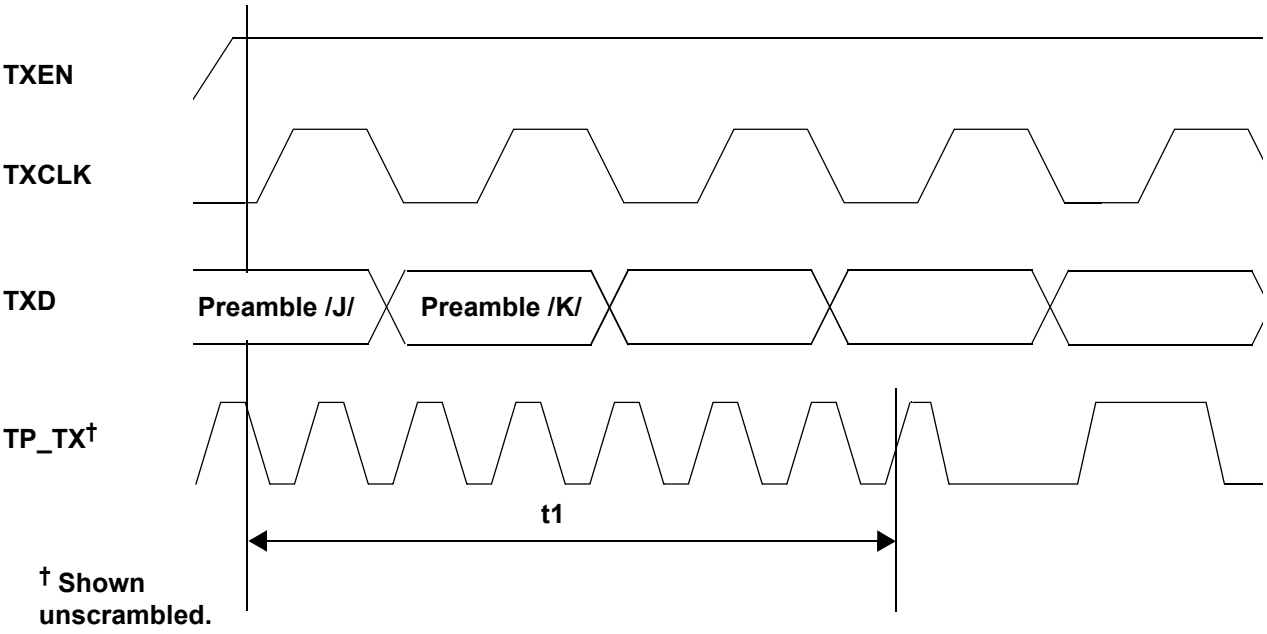

Copyright © 2009, IDT, Inc.
All rights reserved.

9.5.11 100M MII: Carrier Assertion/De-Assertion (Half-Duplex Transmission)

Table 9-18 lists the significant time periods for the 100M MII carrier assertion/de-assertion during half-duplex transmission. The time periods consist of timings of signals on the following pins:

- TXEN
- TXCLK
- CRS

Figure 9-12 shows the timing diagram for the time periods.

Table 9-18. 100M MII Carrier Assertion/De-Assertion (Half-Duplex Transmission Only)

Time Period	Parameter	Condi-tions	Min.	Typ.	Max.	Units
t1	TXEN Sampled Asserted to CRS Assert		0	3	4	Bit times
t2	TXEN De-Asserted to CRS De-Asserted		0	3	4	Bit times

Figure 9-12. 100M MII Carrier Assertion/De-Assertion Timing Diagram (Half-Duplex Transmission Only)

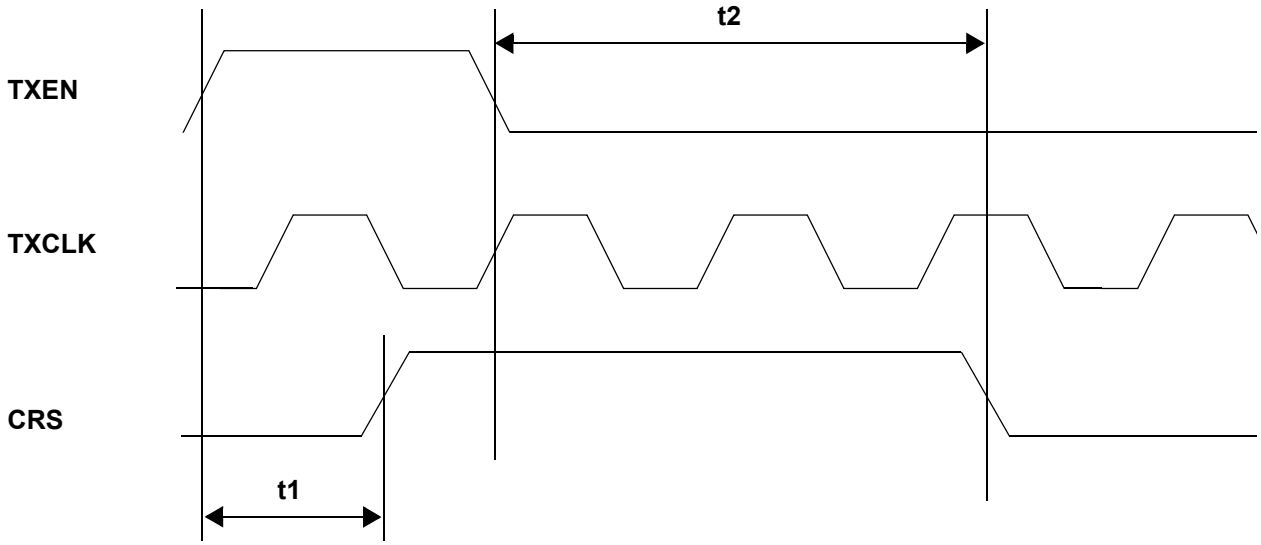

Copyright © 2009, IDT, Inc.
All rights reserved.

9.5.12 10M MII: Carrier Assertion/De-Assertion (Half-Duplex Transmission)

Table 9-19 lists the significant time periods for the 10M MII carrier assertion/de-assertion during half-duplex transmission. The time periods consist of timings of signals on the following pins:

- TXEN
- TXCLK
- CRS

Figure 9-13 shows the timing diagram for the time periods.

Table 9-19. 10M MII Carrier Assertion/De-Assertion (Half-Duplex Transmission Only)

Time Period	Parameter	Condi-tions	Min.	Typ.	Max.	Units
t1	TXEN Asserted to CRS Assert		0	–	2	Bit times
t2	TXEN De-Asserted to CRS De-Asserted		0	2	4	Bit times

Figure 9-13. 10M MII Carrier Assertion/De-Assertion Timing Diagram (Half-Duplex Transmission Only)

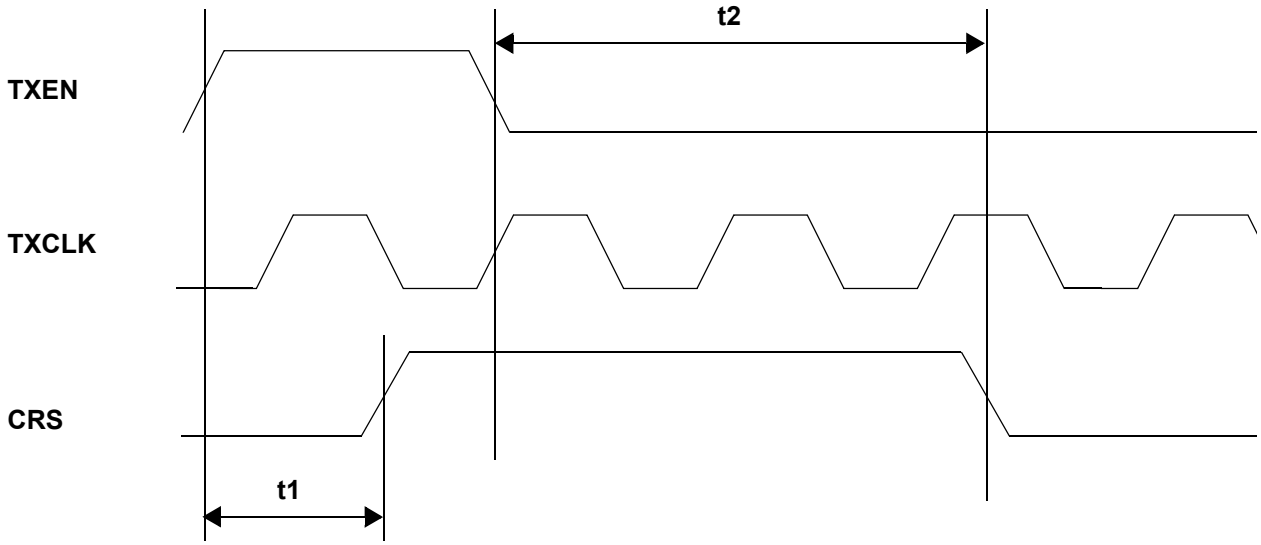

Copyright © 2009, IDT, Inc.
All rights reserved.

9.5.13 100M MII Media Independent Interface: Receive Latency

Table 9-20 lists the significant time periods for the 100M MII / 100M Stream Interface receive latency. The time periods consist of timings of signals on the following pins:

- TP_RX (that is, TP_RXP and TP_RXN)
- RXCLK
- RXD (that is, RXD[3:0])

Figure 9-14 shows the timing diagram for the time periods.

Table 9-20. 100M MII / 100M Stream Interface Receive Latency Timing

Time Period	Parameter	Conditions	Min.	Typ.	Max.	Units
t1	First Bit of /J/ into TP_RX to /J/ on RXD	100M MII	–	16	17	Bit times

Figure 9-14. 100M MII / 100M Stream Interface: Receive Latency Timing Diagram

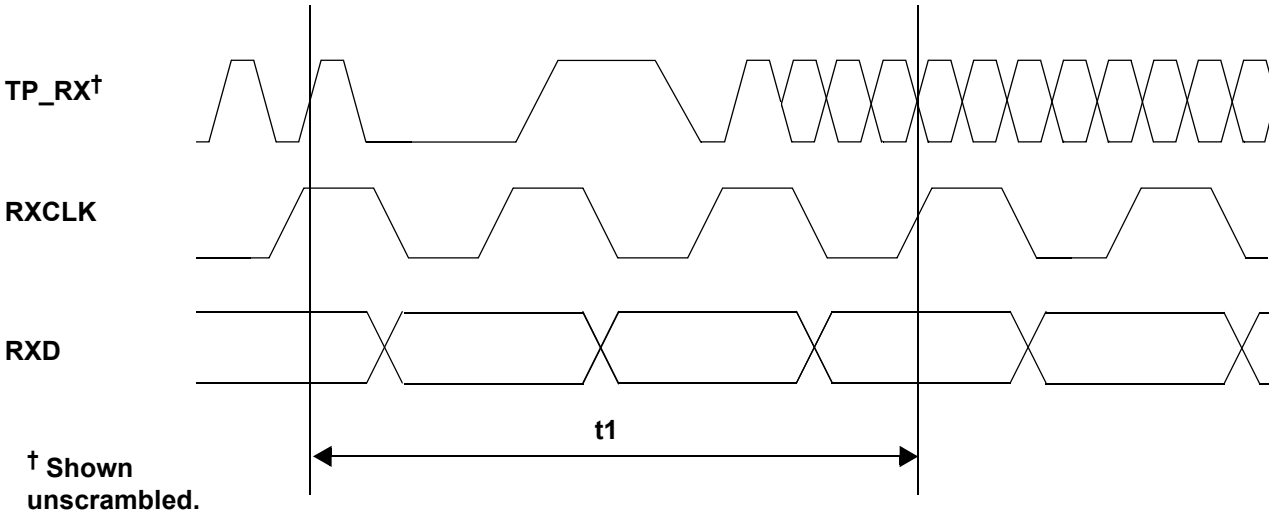

Copyright © 2009, IDT, Inc.
All rights reserved.

9.5.14 100M Media Independent Interface: Input-to-Carrier Assertion/De-Assertion

Table 9-21 lists the significant time periods for the 100M MDI input-to-carrier assertion/de-assertion. The time periods consist of timings of signals on the following pins:

- TP_RX (that is, TP_RXP and TP_RXN)
- CRS
- COL

Figure 9-15 shows the timing diagram for the time periods.

Table 9-21. 100M MDI Input-to-Carrier Assertion/De-Assertion Timing

Time Period	Parameter	Conditions	Min.	Typ.	Max.	Units
t1	First Bit of /J/ into TP_RX to CRS Assert †	–	10	–	14	Bit times
t2	First Bit of /J/ into TP_RX while Transmitting Data to COL Assert †	Half-Duplex Mode	9	–	13	Bit times
t3	First Bit of /T/ into TP_RX to CRS De-Assert ‡	–	13	–	18	Bit times
t4	First Bit of /T/ Received into TP_RX to COL De-Assert ‡	Half-Duplex Mode	13	–	18	Bit times

† The IEEE maximum is 20 bit times.

‡ The IEEE minimum is 13 bit times, and the maximum is 24 bit times.

Figure 9-15. 100M MDI Input to Carrier Assertion / De-Assertion Timing Diagram

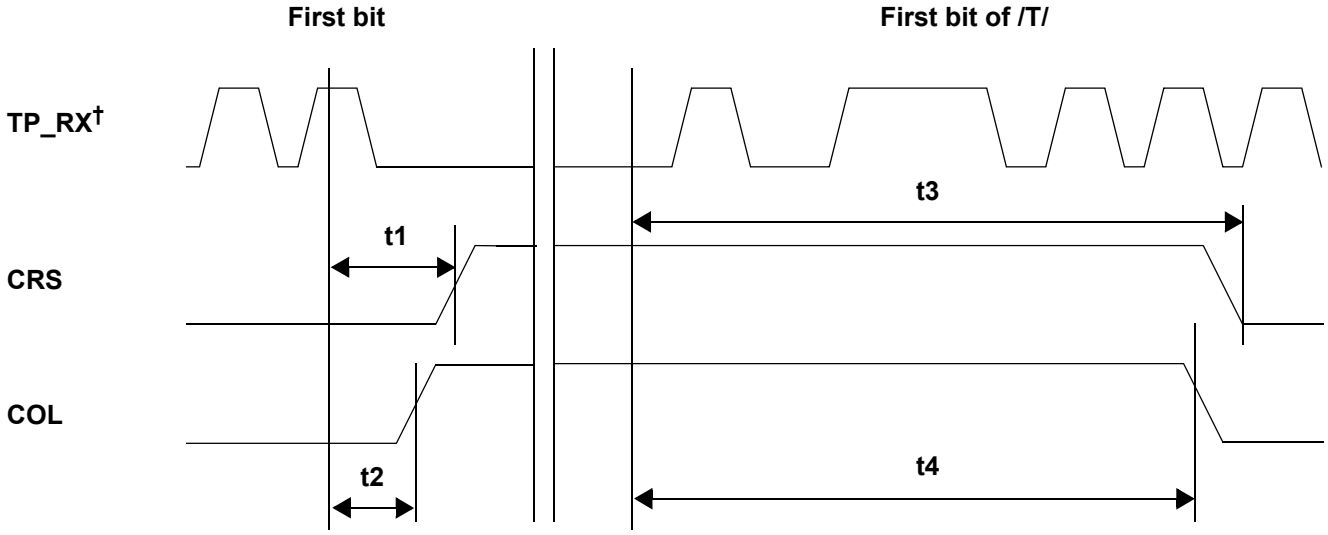

† Shown unscrambled.

Copyright © 2009, IDT, Inc.
All rights reserved.

9.5.15 Reset: Power-On Reset

Table 9-22 lists the significant time periods for the power-on reset. The time periods consist of timings of signals on the following pins:

- VDD
- TXCLK

Figure 9-16 shows the timing diagram for the time periods.

Table 9-22. Power-On Reset Timing

Time Period	Parameter	Conditions	Min.	Typ.	Max.	Units
t1	VDD ≥ 2.7 V to Reset Complete	–	40	45	500	ms

Figure 9-16. Power-On Reset Timing Diagram

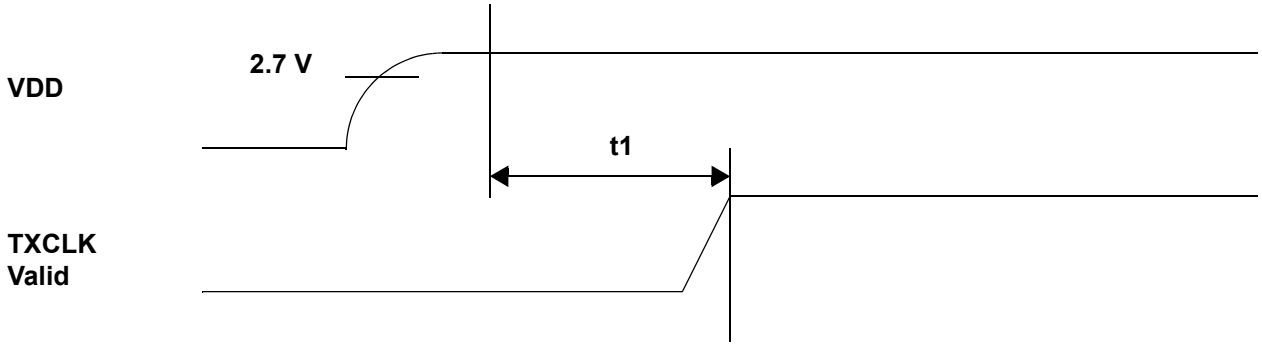

Copyright © 2009, IDT, Inc.
All rights reserved.

9.5.16 Reset: Hardware Reset and Power-Down

Table 9-23 lists the significant time periods for the hardware reset and power-down reset. The time periods consist of timings of signals on the following pins:

- REF_IN
- RESETn
- TXCLK

Figure 9-17 shows the timing diagram for the time periods.

Table 9-23. Hardware Reset and Power-Down Timing

Time Period	Parameter	Condi-tions	Min.	Typ.	Max.	Units
t1	RESETn Active to Device Isolation and Initialization	–	–	60	–	ns
t2	Minimum RESETn Pulse Width	–	500	40	–	ns
t3	RESETn Released to TXCLK Valid	–	–	35	500	ms

Figure 9-17. Hardware Reset and Power-Down Timing Diagram

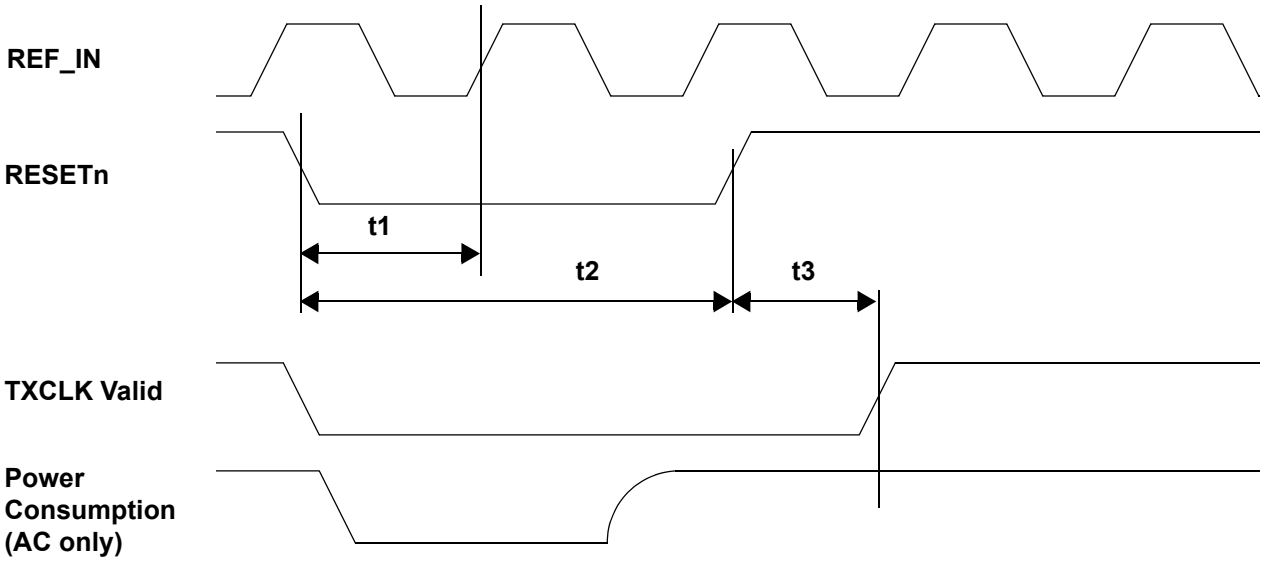

Copyright © 2009, IDT, Inc.
All rights reserved.

9.5.17 10Base-T: Heartbeat Timing (SQE)

Table 9-24 lists the significant time periods for the 10Base-T heartbeat (that is, the Signal Quality Error). The time periods consist of timings of signals on the following pins:

- TXEN
- TXCLK
- COL

Figure 9-18 shows the timing diagram for the time periods.

Note:

1. For more information on 10Base-T SQE operations, see Section 6.5.10, “10Base-T Operation: SQE Test”.
2. In 10Base-T mode, one bit time = 100 ns.

Table 9-24. 10Base-T Heartbeat (SQE) Timing

Time Period	Parameter	Conditions	Min.	Typ.	Max.	Units
t1	COL Heartbeat Assertion Delay from TXEN De-Assertion	10Base-T Half Duplex	–	850	1500	ns
t2	COL Heartbeat Assertion Duration	10Base-T Half Duplex	–	1000	1500	ns

Figure 9-18. 10Base-T Heartbeat (SQE) Timing Diagram

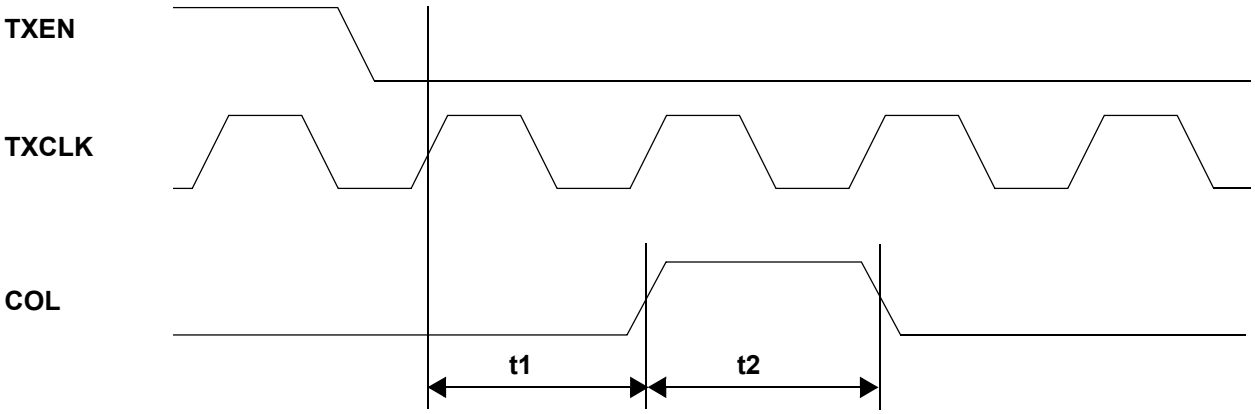

Copyright © 2009, IDT, Inc.
All rights reserved.

9.5.18 10Base-T: Jabber Timing

Table 9-25 lists the significant time periods for the 10Base-T jabber. The time periods consist of timings of signals on the following pins:

- TXEN
- TP_TX (that is, TP_TXP and TP_TXN)
- COL

Figure 9-19 shows the timing diagram for the time periods.

Note: For more information on 10Base-T jabber operations, see Section 6.5.9, "10Base-T Operation: Jabber".

Table 9-25. 10Base-T Jabber Timing

Time Period	Parameter	Conditions	Min.	Typ.	Max.	Units
t1	Jabber Activation Time	10Base-T Half Duplex	20	–	35	ms
t2	Jabber De-Activation Time	10Base-T Half Duplex	300	–	325	ms

Figure 9-19. 10Base-T Jabber Timing Diagram

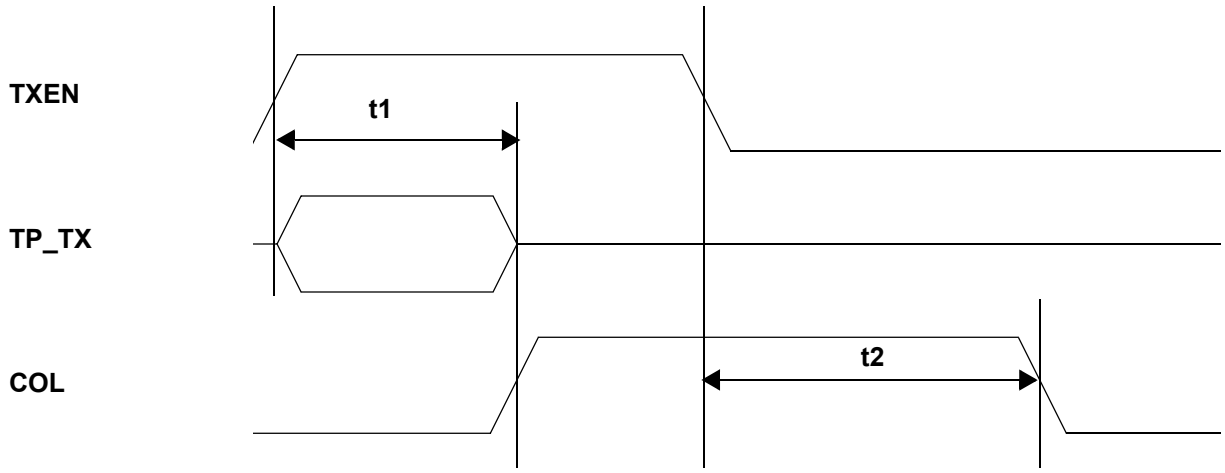

Copyright © 2009, IDT, Inc.
All rights reserved.

9.5.19 10Base-T: Normal Link Pulse Timing

Table 9-26 lists the significant time periods for the 10Base-T Normal Link Pulse (which consists of timings of signals on the TP_TXP pins). Figure 9-20 shows the timing diagram for the time periods.

Table 9-26. 10Base-T Normal Link Pulse Timing

Time Period	Parameter	Conditions	Min.	Typ.	Max.	Units
t1	Normal Link Pulse Width	10Base-T	–	100	–	ns
t2	Normal Link Pulse to Normal Link Pulse Period	10Base-T	8	20	25	ms

Figure 9-20. 10Base-T Normal Link Pulse Timing Diagram

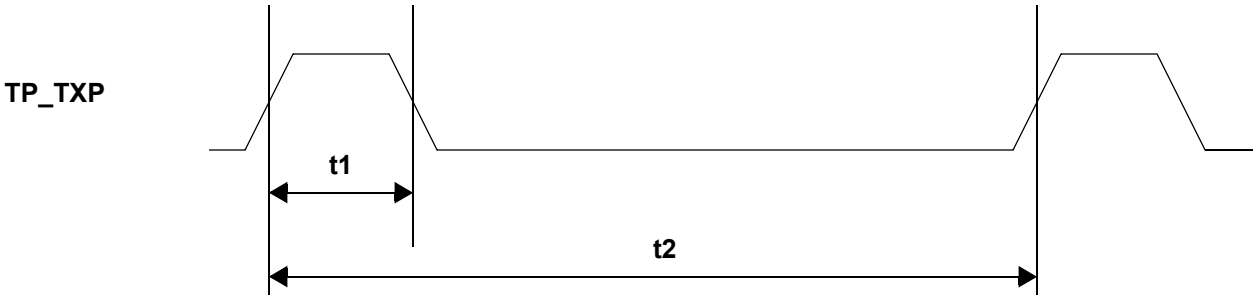

Copyright © 2009, IDT, Inc.
All rights reserved.

9.5.20 Auto-Negotiation Fast Link Pulse Timing

Table 9-27 lists the significant time periods for the ICS1893BF Auto-Negotiation Fast Link Pulse. The time periods consist of timings of signals on the following pins:

- TP_TXP
- TP_TXN

Figure 9-21 shows the timing diagram for one pair of these differential signals, for example TP_TXP minus TP_TXN.

Table 9-27. Auto-Negotiation Fast Link Pulse Timing

Time Period	Parameter	Conditions	Min.	Typ.	Max.	Units
t1	Clock/Data Pulse Width	–	–	90	–	ns
t2	Clock Pulse-to-Data Pulse Timing	–	55	60	70	µs
t3	Clock Pulse-to-Clock Pulse Timing	–	110	125	140	µs
t4	Fast Link Pulse Burst Width	–	–	5	–	ms
t5	Fast Link Pulse Burst to Fast Link Pulse Burst	–	10	15	25	ms
t6	Number of Clock/Data Pulses in a Burst	–	15	20	30	pulses

Figure 9-21. Auto-Negotiation Fast Link Pulse Timing Diagram

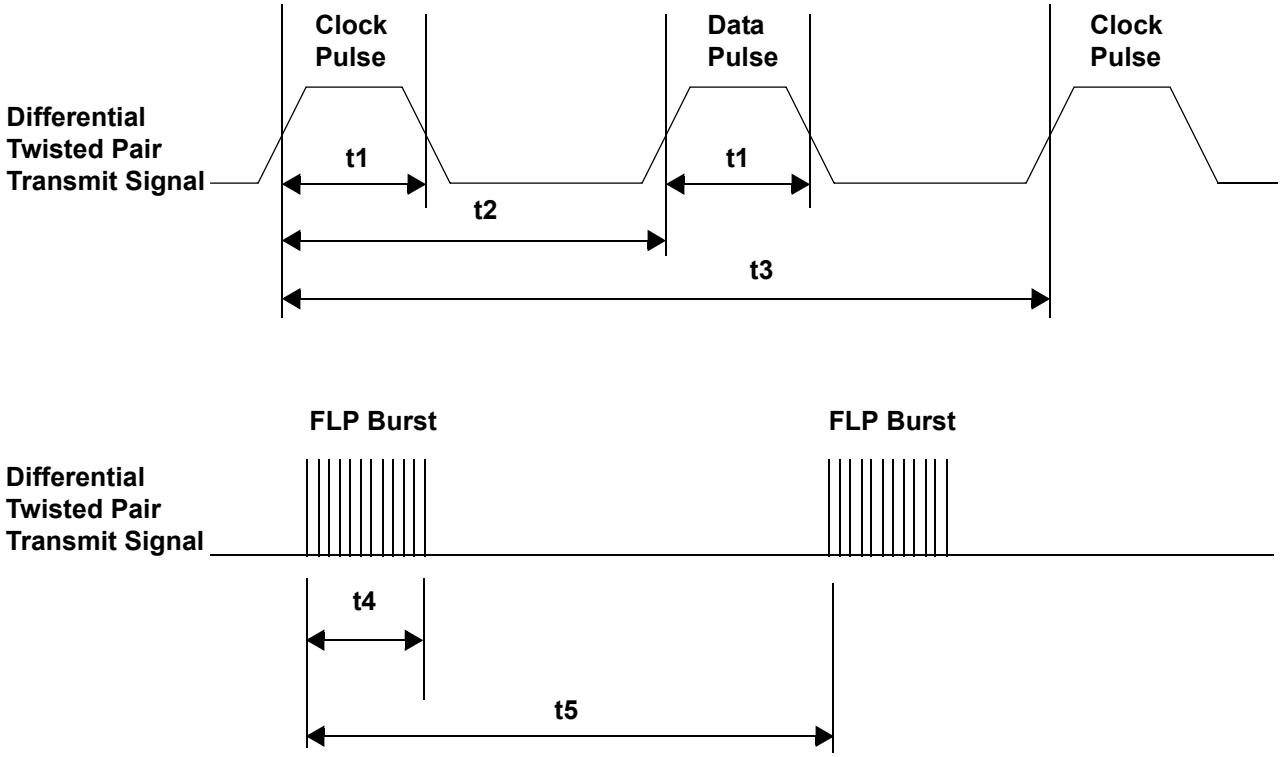

Copyright © 2009, IDT, Inc.
All rights reserved.

Chapter 10 Physical Dimensions of ICS1893BF Package

Figure 10-1. ICS1893BF 300 mil SSOP Physical Dimensions

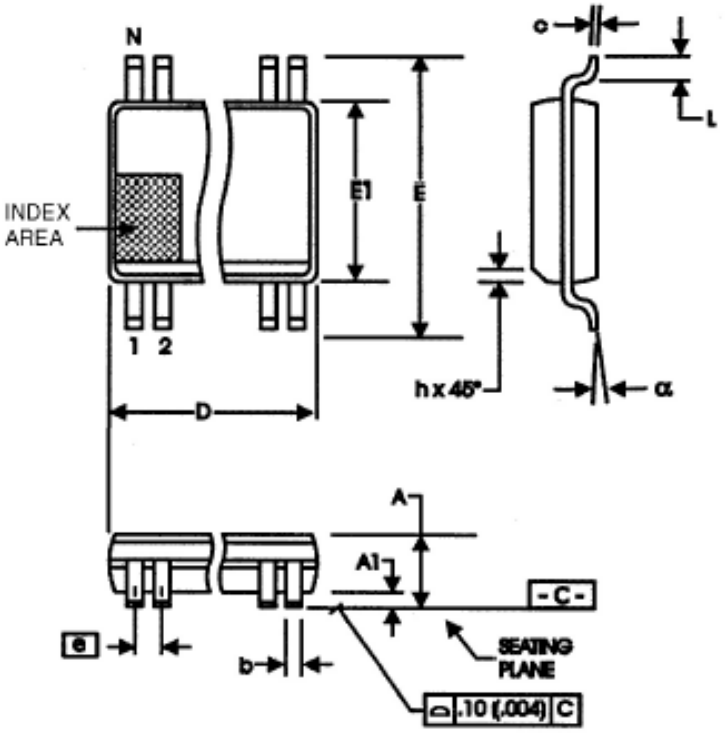

300 mil SSOP

SYMBOL	In Millimeters* COMMON DIMENSIONS		In Inches COMMON DIMENSIONS	
	MIN	MAX	MIN	MAX
A	2.41	2.80	.095	.110
A1	0.20	0.40	.008	.016
b	0.20	0.34	.008	.0135
c	0.13	0.25	.005	.010
D	SEE VARIATIONS		SEE VARIATIONS	
E	10.03	10.68	.395	.420
E1	7.40	7.60	.291	.299
e	0.635 BASIC		0.025 BASIC	
h	0.38	0.64	.015	.025
L	0.50	1.02	.020	.040
N	SEE VARIATIONS		SEE VARIATIONS	
α	0°	8°	0°	8°

Variations

N	D mm.*		D (inch)	
	MIN	MAX	MIN	MAX
28	9.40	9.65	.370	.380
48	15.75	16.00	.620	.630
56	18.31	18.55	.720	.730
64	20.80	21.11	.820	.830

*For Reference Only. Controlling dimensions in inches.

Copyright © 2009, IDT, Inc.
All rights reserved.

Figure 10-2. ICS1893BK Thermally Enhanced, Very Thin, Fine Pitch, Quad Flat / No Lead Plastic Package

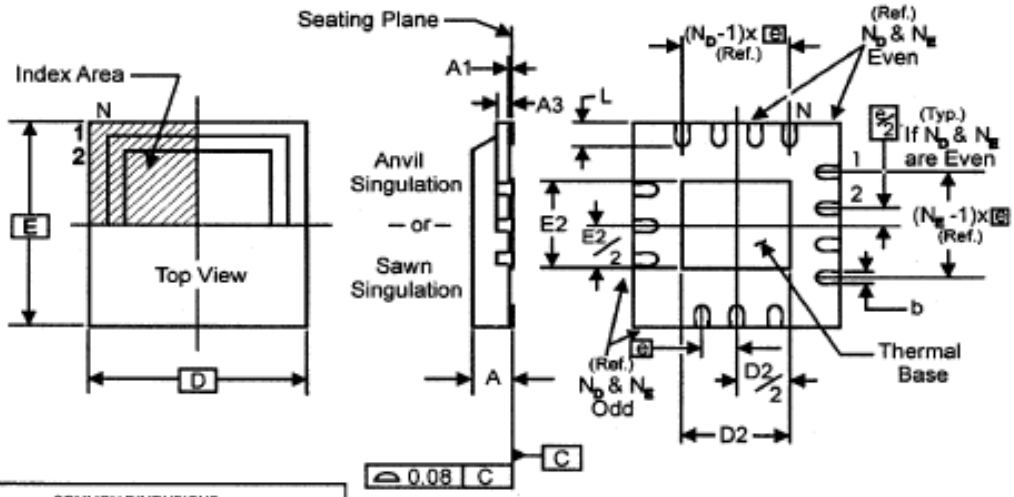

COMMON DIMENSIONS		
SYMBOL	MIN.	MAX.
A	0.8	1.0
A1	0	0.05
A3	0.25 Reference	
b	0.18	0.3
e	0.50 BASIC	

THERMALLY ENHANCED, VERY THIN, FINE PITCH QUAD FLAT / NO LEAD PLASTIC PACKAGE

VARIATIONS

SYMBOL	VEED-2 / -4	VGGD-1 / -5	VHHD-2 / -4	VJJD-1 / -4	VJJD-2 / -5	VKKD-1 / -3	VKKD-2 / -4	VLLD-1 / -4	VLLD-2 / -5
N	16	20	32	36	40	44	48	52	56
N_D	4	5	8	9	10	11	12	13	14
N_E	4	5	8	9	10	11	12	13	14
D x E BASIC	3.00 x 3.00	4.00 x 4.00	5.00 x 5.00	6.00 x 6.00		7.00 x 7.00		8.00 x 8.00	
D2 MIN. / MAX.	0.25 / 1.80	0.75 / 2.80	1.25 / 3.80	1.75 / 4.80		2.25 / 5.80		2.75 / 6.80	
E2 MIN. / MAX.	0.25 / 1.80	0.75 / 2.80	1.25 / 3.80	1.75 / 4.80		2.25 / 5.80		2.75 / 6.80	
L MIN. / MAX.	0.30 / 0.50	0.35 / 0.75	0.30 / 0.50	0.35 / 0.75	0.30 / 0.50	0.35 / 0.75	0.30 / 0.50	0.35 / 0.75	0.30 / 0.50

SYMBOL	VMMD-1	VMMD / -3 / -4	VNND-2	VNND-3
N	60	64	68	72
N_D	15	16	17	18
N_E	15	16	17	18
D x E BASIC	9.00 x 9.00	9.00 x 9.00	10.00 x 10.00	10.00 x 10.00
D2 MIN. / MAX.	7.50 / 7.80	3.25 / 7.80	3.75 / 8.25	4.25 / 8.45
E2 MIN. / MAX.	7.50 / 7.80	3.25 / 7.80	3.75 / 8.25	4.25 / 8.45
L MIN. / MAX.	0.35 / 0.45	0.30 / 0.56	0.45 / 0.66	0.45 / 0.55

SPECIAL NON-JEDEC	
ALL DIM. SAME EXCEPT AS BELOW:	
D2 MIN. / MAX.	4.35 / 4.65
E2 MIN. / MAX.	5.05 / 5.35

Copyright © 2009, IDT, Inc.
All rights reserved.

Chapter 11 Ordering Information

Figure 11-1. shows ordering information for the ICS1893BF.

***NOTE: EOL for non-green parts to occur on 5/13/10 per PDN U-09-01**

Part / Order Number	Marking	Package	Temperature
ICS1893BF*	1893BF	48-Lead 300-mil SSOP	0° C to 70° C
ICS1893BFLF	1893BFLF	48-Lead SSOP Lead/Pb-Free	0° C to 70° C
ICS1893BFT*	1893BF	48-Lead 300-mil SSOP, Tape and Reel	0° C to 70° C
ICS1893BFLFT	1893BFLF	48-Lead SSOP Lead/Pb-Free, Tape and Reel	0° C to 70° C
ICS1893BFI*	1893BFI	48-Lead 300-mil SSOP	-40° C to 85° C
ICS1893BFILF	1893BFILF	48-Lead SSOP Lead/Pb-Free	-40° C to 85° C
ICS1893BFIT*	1893BFI	48-Lead 300-mil SSOP, Tape and Reel	-40° C to 85° C
ICS1893BFILFT	1893BFILF	48-Lead SSOP Lead/Pb-Free, Tape and Reel	-40° C to 85° C
ICS1893BK*	1893BK	56-Lead 8x8 MLF2	0° C to 70° C
ICS1893BKLF	1893BKLF	56-Lead MLF2 Lead/Pb-Free	0° C to 70° C
ICS1893BKT*	1893BK	56-Lead 8x8 MLF2, Tape and Reel	0° C to 70° C
ICS1893BKLFT	1893BKLF	56-Lead MLF2 Lead/Pb-Free, Tape and Reel	0° C to 70° C
ICS1893BKI*	1893BKI	56-Lead 8x8 MLF2	-40° C to 85° C
ICS1893BKILF	1893BKILF	56-Lead MLF2 Lead/Pb-Free	-40° C to 85° C
ICS1893BKIT*	1893BKI	56-Lead 8x8 MLF2, Tape and Reel	-40° C to 85° C
ICS1893BKILFT	1893BKILF	56-Lead MLF2 Lead/Pb-Free, Tape and Reel	-40° C to 85° C

Copyright © 2009, IDT, Inc.
All rights reserved.

11.1 Marking Diagram

Notes:
1. Line 3: ###### = Lot number.
2. Line 4: YYWW = Date code.
3. Line 5: Origin

Copyright © 2009, IDT, Inc.
All rights reserved.

Integrated Device Technology, Inc.

Web Site: http://www.idt.com

Copyright © 2009, IDT, Inc.
All rights reserved.

Copyright © 2009, IDT, Inc.
All rights reserved.

Copyright © 2009, IDT, Inc.
All rights reserved.

Copyright © 2009, IDT, Inc.
All rights reserved.

Copyright © 2009, IDT, Inc.
All rights reserved.