ZRO0833A1LF

Rev A1

14118 Stowe Drive, Suite B | Poway, CA 92064
TEL: (858) 621-2700 | FAX: (858) 486-1927
URL: www.zcomm.com
EMAIL: applications@zcomm.com

Voltage-Controlled Oscillator Surface Mount Module

Applications

- Satellite Communication Systems
- Digital Radio Equipment
- Fixed Wireless

Application Notes

- AN-101: Mounting and Grounding
- AN-102: Output Loading
- AN-107: Manual Soldering

PHASE NOISE (1 Hz BW, typical)

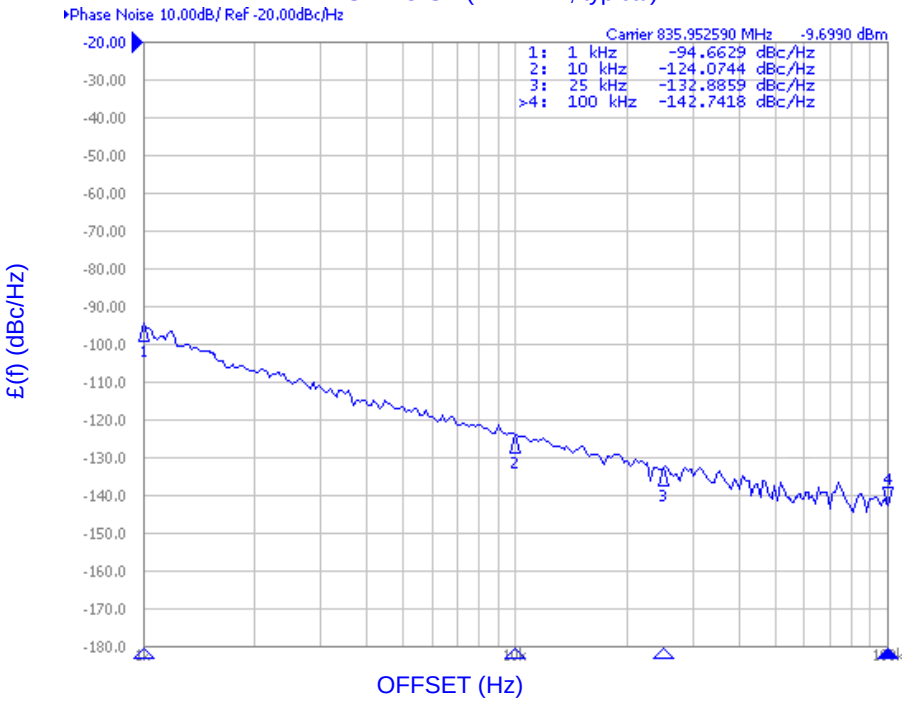

Performance Specifications	Min	Typ	Max	Units
Oscillation Frequency Range	826		841	MHz
Phase Noise @ 10 kHz offset (1 Hz BW)		-122		dBc/Hz
Harmonic Suppression (2nd)		-15	-14	dBc
Tuning Voltage	0.3		4.7	Vdc
Tuning Sensitivity (avg.)		5		MHz/V
Power Output	-6	-4	-2	dBm
Load Impedance		50		Ω
Input Capacitance			50	pF
Pushing			.2	MHz/V
Pulling (14 dB Return Loss, Any Phase)			.1	MHz
Operating Temperature Range	-40		85	°C
Package Style		MINI-16-SM		

Power Supply Requirements	Min	Typ	Max	Units
Supply Voltage (Vcc, nom.)		5		Vdc
Supply Current (Icc)		13	16	mA

Additional Notes

Phase Noise @ 1 kHz offset (1 Hz BW) -95 (typ) dBc/Hz
Phase Noise @ 100 kHz offset (1 Hz BW) -140 (typ) dBc/Hz

LFSuffix = RoHS Compliant. All specifications are subject to change without notice.

© Z-Communications, Inc. All Rights Reserved.

Tuning Curve, typ.

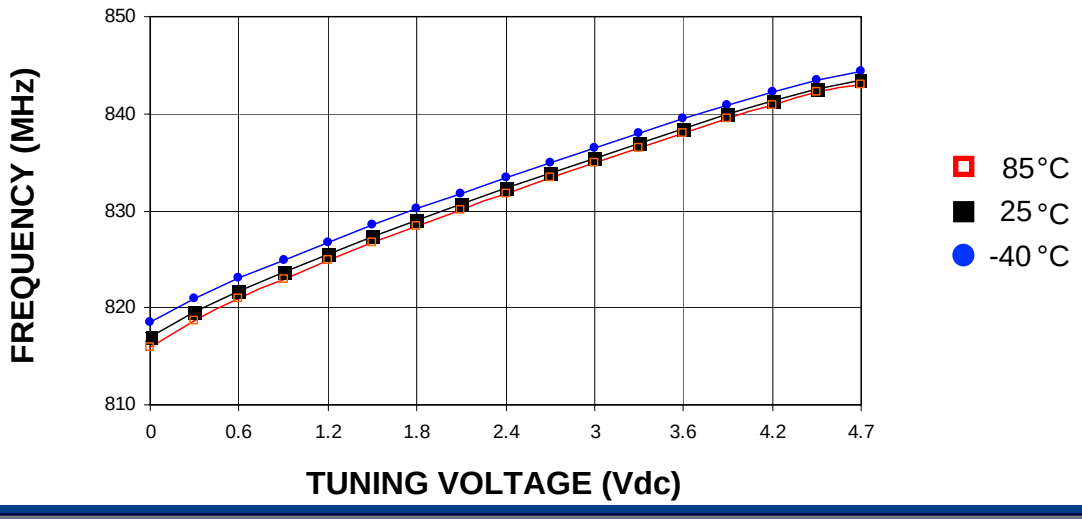

Power Curve, typ.

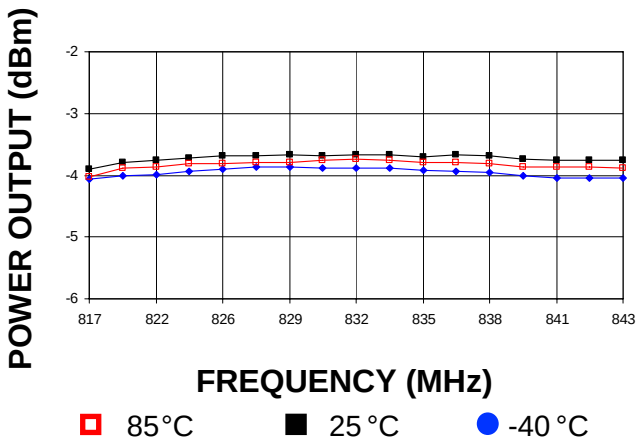

Footprint

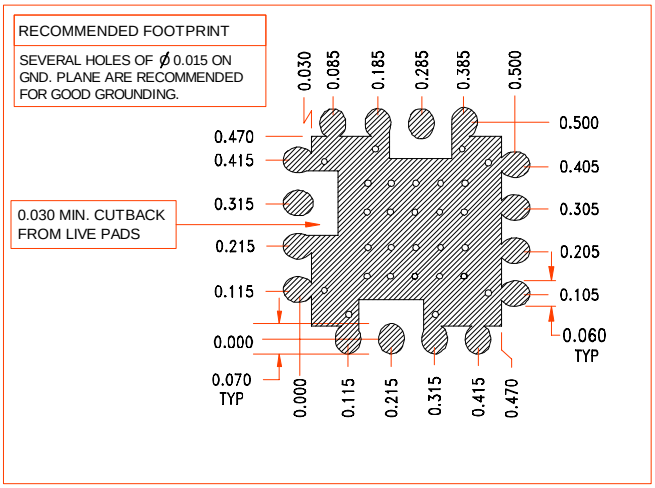

Physical Dimensions

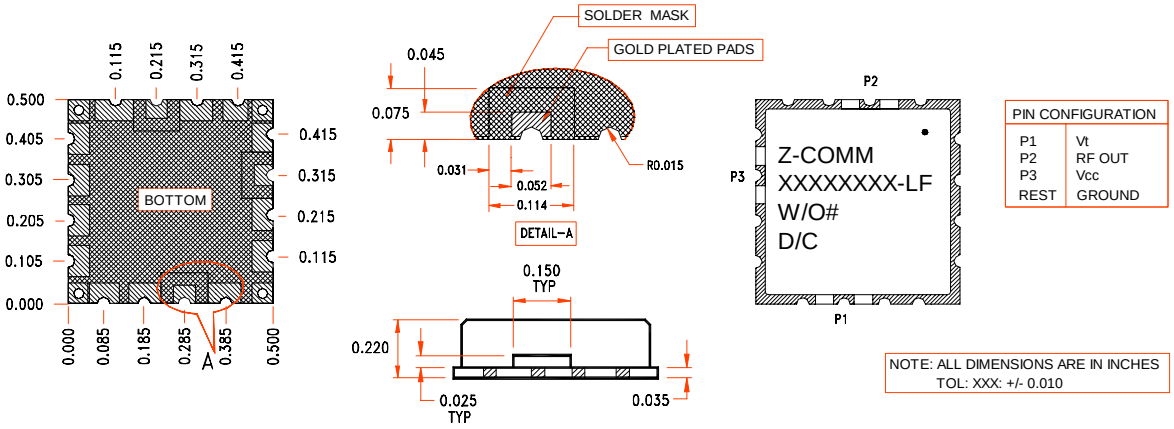

LFSuffix = RoHS Compliant. All specifications are subject to change without notice.

© Z-Communications, Inc. All Rights Reserved.