DASH NO.	M CODE	MADE FROM
		SAME AS KA-89-30-M06 EXCEPT FOR FINISH.

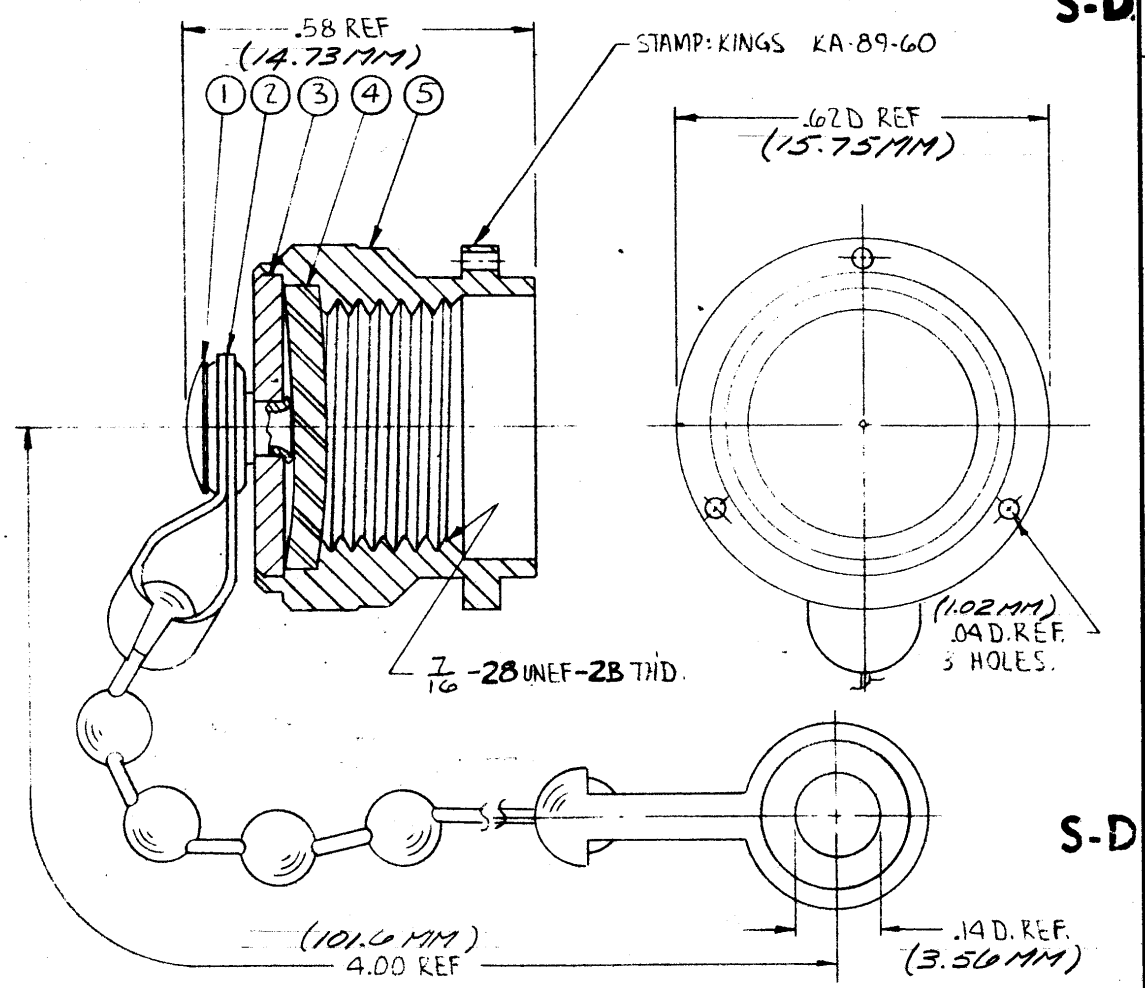

S-D

S-D

UNLESS OTHERWISE SPECIFIED:

1. TOLERANCES: FRACTIONS & 2 PLACE DECIMALS ± .010
   3 PLACE DECIMALS ± .004 ANGLES ± 0° 30'
   T. I. R. CONCENTRICITY OF ANY 2 DIAMETERS MAY NOT EXCEED HALF THE SUM OF THEIR TOLERANCES.
2. REMOVE ALL BURRS. BREAK SHARP EDGES .005 MAX.
3. NO FILLETS PERMITTED.
4. SURFACE ROUGHNESS 63 MICROINCHES RMS MAX.
5. ALL DIMENSIONS PRIOR TO PLATING.

REVISIONS

ISSUE	CHANGES
2.	ER 16597 VLS 23 OCT 78

S-D

SCALE: 4:1

USED ON:

REF:

FINISH

SPEC. KER 10004

MATL.

SPEC.

TNC CAP & CHAIN

DRAWN VLS	DATE 23 OCT 78
APPR.	DATE 26 OCT 78

KINGS ELECTRONICS
40 MARBLEDALE ROAD
TUCKAHOE, N. Y. 10707

KA-89-60