Product NO.	DOSIN-806-0010			
REV	DESCRIPTION	DWN	DATE	APPROVEN
A	First issue	Mr.Wang	2012/04/27	John kine
B				

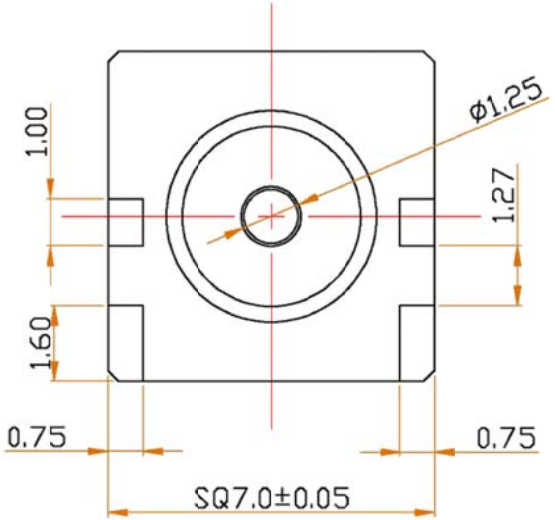

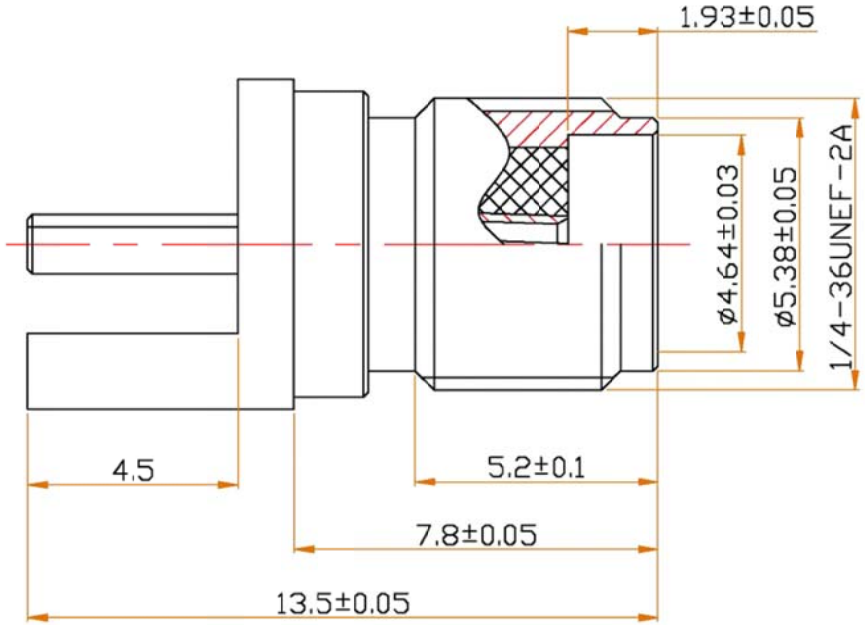

Specifications:

Impedance: 50 Ohms
Frequency range:0~6GHZ
VSWR:1.25MAX
Working voltage:500V rms @ sea level
Insulation resistance:5000 Ohms min
Temperature range:-65℃ TO +165℃
Relative temperature:≤95%(40° C±2° C)

NO	Component Number	Material	Finish
1	Body	Brass	AU:1-3u″
2	Insulator	TEFLON	None
3	Center contact	Brass	AU:5u″
4			
5			
6			
7			
8			
9			
10			

NOTE:

DRAWN	Zelin.Zhang	2012/04/27
CHECKED		
APPROVALS	John Kine	27/04.2012

Tolerance	X. ±0.15 X.X ±0.10 X.XX ±0.05 Angular ±5°
View	
UNIT	MM
SCALE	1:1

DOSIN —RF CONNECTOR Dosin Industrial (H.K)Co.Ltd
东莞市德索五金电子制品有限公司
Dosin Hardware Electronics Co.,Ltd
E-mail:dosin2005@163.com
dosin2005@dosin-china.com
Web:http://www.dosinconn.com
TEL:(0086)769-81153906
FAX:(0086)769-81875836

Name:	SMA Jack PCB MOUNT		
SIZE A	Product NO. DOSIN-806-0010		REV B
DateTime 2012/04/27	CAD FILE D/company drawings/BD		SHEET: 1 OF 1