THIS DRAWING IS UNPUBLISHED. RELEASED FOR PUBLICATION 1990.
© COPYRIGHT 1990 BY TYCO ELECTRONICS CORPORATION. ALL RIGHTS RESERVED.

LOC	DIST
J	

REVISIONS
変更

P	LTR	DESCRIPTION	DATE	DWN	APVD
	D	REVISED FJB0-0267-03	09MAY03	T.T	H.M
	D1	REVISED PER ECO-10-000443	23JAN10	KK	HMR

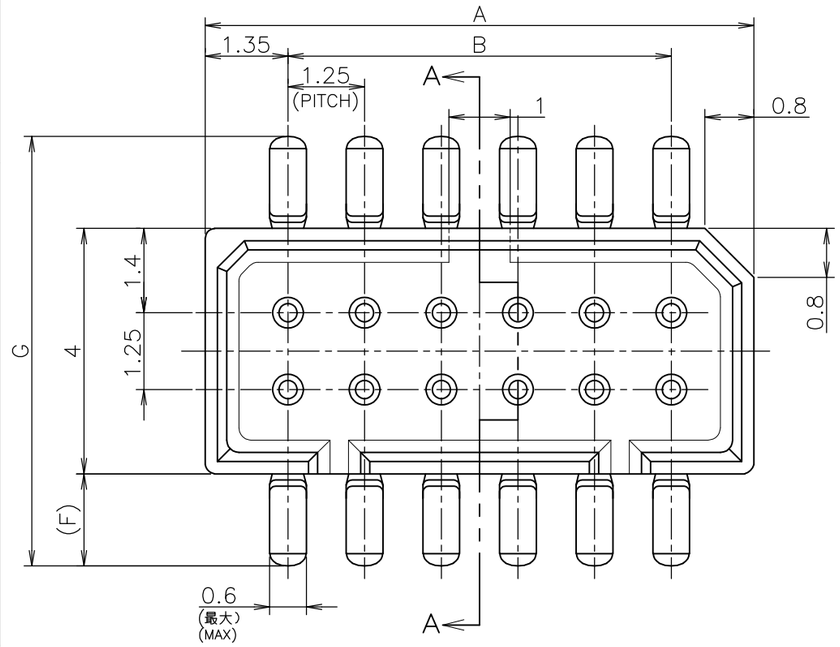

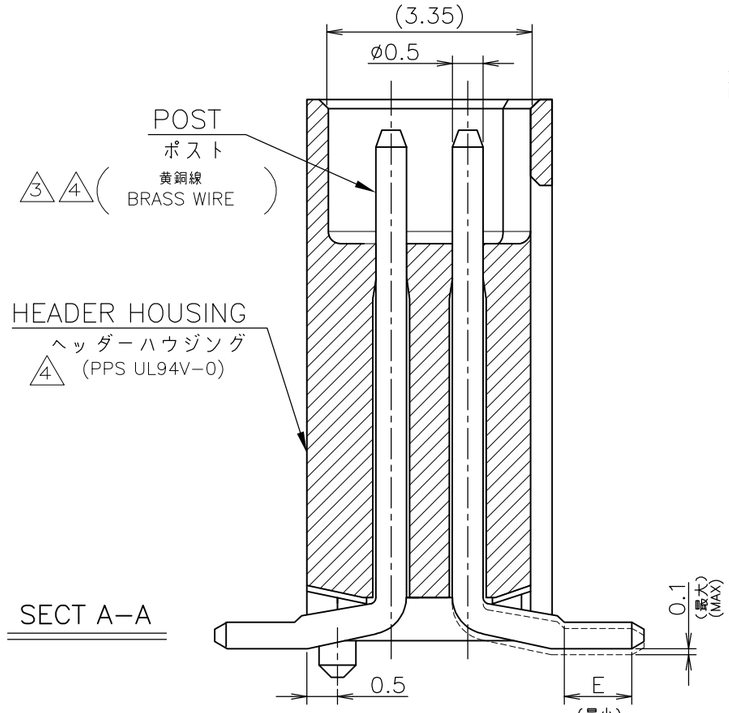

SECT A-A

注記
NOTE

1 嵌合相手製品型番及び、嵌合時寸法は表－1参照のこと。

NOTE

1 MATING COUNTER PART NUMBER AND DIMENSIONS AFTER MATING: SEE TABLE 1.

嵌合時寸法:巾(mm)x高さ(mm)
DIMENSIONS AFTER MATING : WIDTH(mm) x HEIGHT(mm)

嵌合相手側 MATING COUNTER コネクタ CONN / POST HDR ASSY		SMT TYPE-IMPROVED TYPE X-176756-X ボス付,吸着テープ付 WITH BOSS, WITH POLYIMIDE TAPE	
		ハウジング 高さ C寸法 HOUSING HEIGHT C DIMENSIONS	
RECE HDR ASSY		6.85	9.35
DIP TYPE	V TYPE X-174635-X	5.6(巾W)x 8.0(高H)	7.0(巾W)x 10.5(高H)
DIP TYPE	H TYPE X-174636-X	5.6(巾W)x 8.8(高H)	7.0(巾W)x 11.3(高H)
SMT TYPE	V TYPE ボス無 WITHOUT BOSS X-174904-X / ボス付 WITH BOSS X-174639-X	5.6(巾W)x 8.0(高H)	7.0(巾W)x 10.5(高H)
SMT TYPE	H TYPE ボス無 WITHOUT BOSS X-174905-X / ボス付 WITH BOSS X-174640-X	5.6(巾W)x 9.9(高H)	7.0(巾W)x 12.4(高H)

TABLE 1
表－1

SMT TYPEは、巾及び高さ寸法に半田付タイン部寸法を含みます。
SMT TYPE INCLUDE DIMENSIONS OF SOLDER DIP TINE.

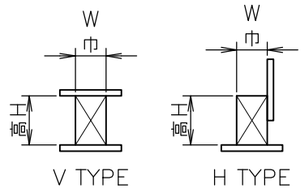

嵌合状態
MATING CONDITION

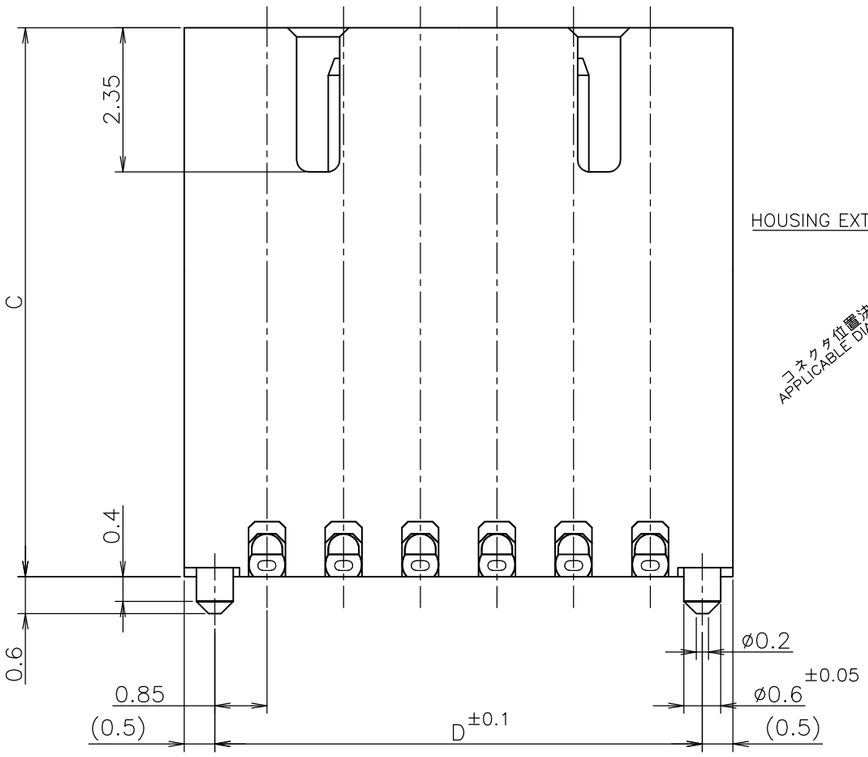

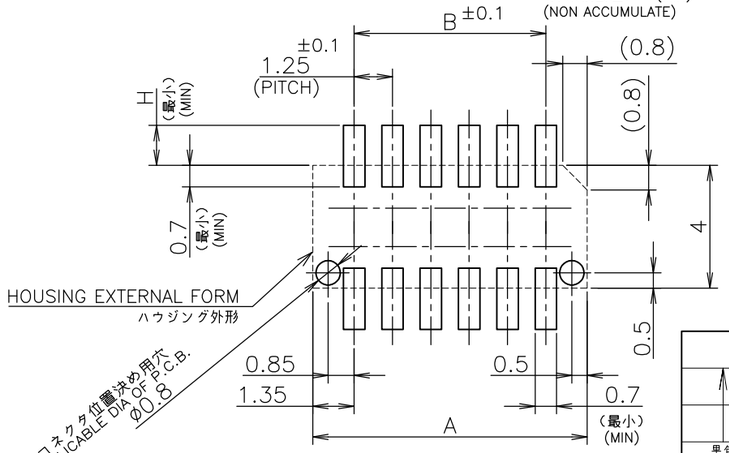

P.C.B MOUNTING LAYOUT
基板加工寸法
適用基板厚：0.6mm最小)
(APPLICABLE P.C.B THK : 0.6mm MIN)

2 一般公差

10以下：±0.2
10を越え30以下：±0.25
30を越え100以下：±0.3
角度：±3°

2 GENERAL TOLERANCE

10≧：±0.2
30> ≧10：±0.25
100> ≧30：±0.3
ANGLES：±3°

3 仕上げ：ニッケル下地錫めっき

3 FINISH : TIN PL. NiUNDER PL. ALL OVER

5 OBSOLETE PARTS: OBSOLETE CIS STREAMLINING PER D.RENAUD/D.SINISI

鉛フリー
LEAD FREE

↑	↑	↑	↑	↑	11.70	↑	10.00	12.70	18	4-	↑ -8
	2.0	7.0	1.5	1.0	7.95	9.35	6.25	8.95	12	4-	-2
黒色 BLACK	1.3	5.6	0.8	0.4	12.95	6.85	11.25	13.95	20	5 ~~2-176756-0~~	
色別 COLOR	H	G	F	E	D	C	B	A	極数 Pos.	型番 P/N	
	寸法 DIMENSIONS										

THIS DRAWING IS A CONTROLLED DOCUMENT.

DIMENSIONS: 単位： 粍 MM

TOLERANCES UNLESS OTHERWISE SPECIFIED: 一般公差
0 PLC ±
1 PLC ±
2 PLC ±
3 PLC ±
4 PLC ±
ANGLES ±
2

MATERIAL 材料 4

FINISH 仕上 3

DWN S.KANEKI 07APR2003
CHK J.TANIGAWA 17JAN90
APVD S.KUBOUCHI 17SEP92
PRODUCT SPEC 製品規格 108-5246
APPLICATION SPEC 取付適用規格
WEIGHT

tyco Electronics
Tyco Electronics AMP K.K.
Kawasaki,Japan

NAME 名称
1.25 F-P CONNECTOR (B-TO-B)
DOUBLE ROW POST HDR ASSY SMT TYPE
WITH BOSS

SIZE	CAGE CODE	DRAWING NO 番号	RESTRICTED TO
A3	00779	C-176756	—

CUSTOMER DRAWING

SCALE 尺度	SHEET	OF	REV
1:1	1	1	D1

AMP 1470-19 REV 31MAR2000

07APR2003 4:32pm FJ0T0102