- **Single- or Dual-Supply Operation**
- **Wide Range of Supply Voltages 2 V to 18 V**
- **Very Low Supply Current Drain 0.3 mA Typ at 5 V**
- **Fast Response Time . . . 200 ns Typ for TTL-Level Input Step**
- **Built-In ESD Protection**
- **High Input Impedance . . . 10^{12} Ω Typ**
- **Extremely Low Input Bias Current 5 pA Typ**
- **Ultrastable Low Input Offset Voltage**
- **Input Offset Voltage Change at Worst-Case Input Conditions Typically 0.23 μV/Month, Including the First 30 Days**
- **Common-Mode Input Voltage Range Includes Ground**
- **Outputs Compatible With TTL, MOS, and CMOS**
- **Pin-Compatible With LM339**

D, J, N, OR PW PACKAGE
(TOP VIEW)

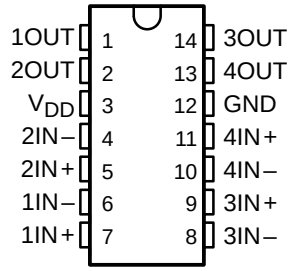

FK PACKAGE
(TOP VIEW)

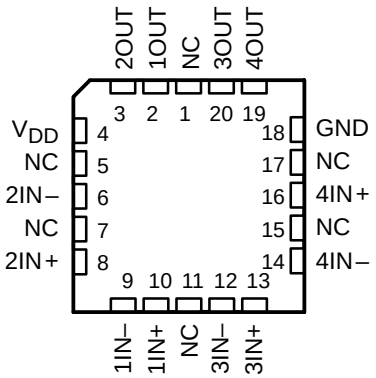

NC – No internal connection

description

These quadruple differential comparators are fabricated using LinCMOS™ technology and consist of four independent voltage comparators designed to operate from a single power supply. Operation from dual supplies is also possible if the difference between the two supplies is 2 V to 18 V. Each device features extremely high input impedance (typically greater than 10^{12} Ω), allowing direct interfacing with high-impedance sources. The outputs are n-channel open-drain configurations and can be connected to achieve positive-logic wired-AND relationships.

symbol (each comparator)

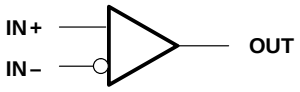

The TLC374 has internal electrostatic discharge (ESD) protection circuits and has been classified with a 1000-V ESD rating using human body model testing. However, care should be exercised in handling this device as exposure to ESD may result in degradation of the device parametric performance.

The TLC374C is characterized for operation from 0°C to 70°C. The TLC374I is characterized for operation from –40° to 85°C. The TLC374M is characterized for operation over full military temperature range of –55°C to 125°C. The TLC374Q is characterized for operation from –40°C to 125°C.

Please be aware that an important notice concerning availability, standard warranty, and use in critical applications of Texas Instruments semiconductor products and disclaimers thereto appears at the end of this data sheet.

LinCMOS is a trademark of Texas Instruments Incorporated.

PRODUCTION DATA information is current as of publication date. Products conform to specifications per the terms of Texas Instruments standard warranty. Production processing does not necessarily include testing of all parameters.

Copyright © 1999, Texas Instruments Incorporated

AVAILABLE OPTIONS

T_A	V_{IO} max AT 25°C	PACKAGED DEVICES					CHIP FORM (Y)
		SMALL OUTLINE (D)	CHIP CARRIER (FK)	CERAMIC DIP (J)	PLASTIC DIP (N)	TSSOP (PW)	
0°C to 70°C	5 mV	TLC374CD	—	—	TLC374CN	TLC374CPW	TLC374Y
–40°C to 85°C	5 mV	TLC374ID	—	—	TLC374IN	—	—
–55°C to 125°C	5 mV	TLC374MD	TLC374MFK	TLC374MJ	TLC374MN	—	—
–40°C to 125°C	5 mV	TLC374QD	—	—	TLC374QN	—	—

The D packages are available taped and reeled. Add R suffix to device type (e.g., TLC374CDR).

equivalent schematic (each comparator)

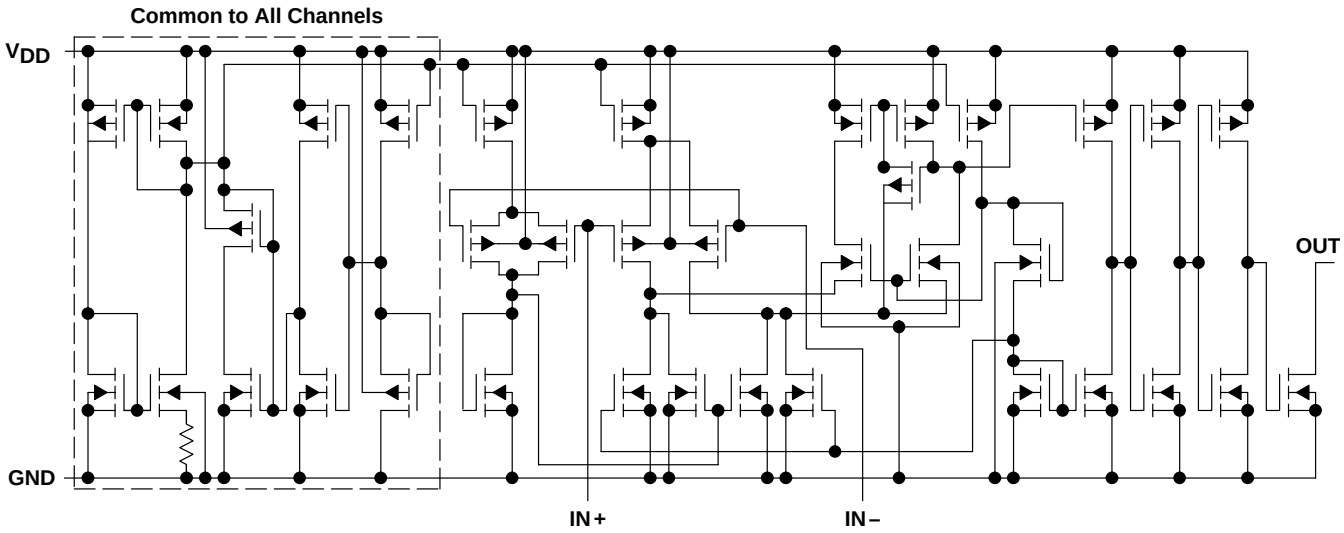

TLC374Y chip information

This chip, when properly assembled, displays characteristics similar to the TLC374C. Thermal compression or ultrasonic bonding may be used on the doped-aluminum bonding pads. Chips may be mounted with conductive epoxy or a gold-silicon preform.

BONDING PAD ASSIGNMENTS

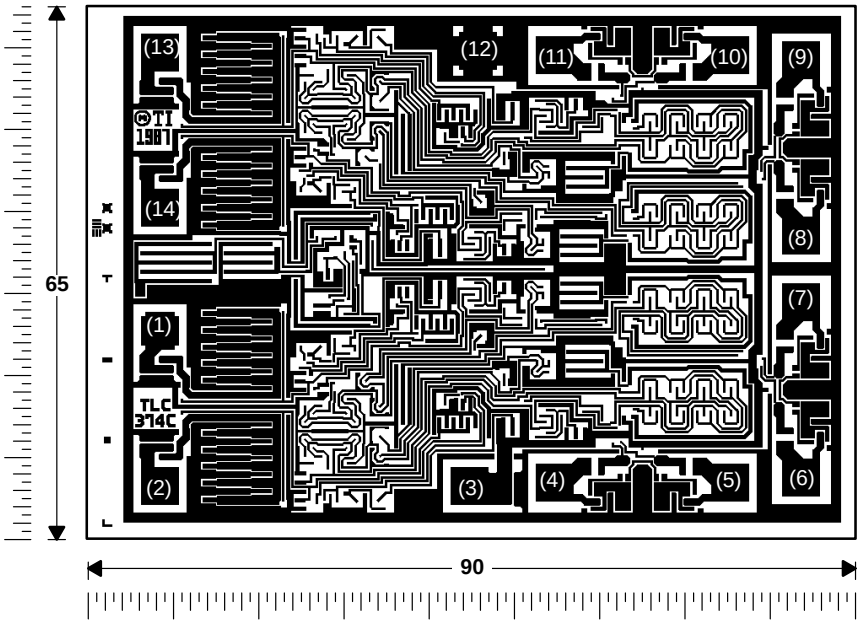

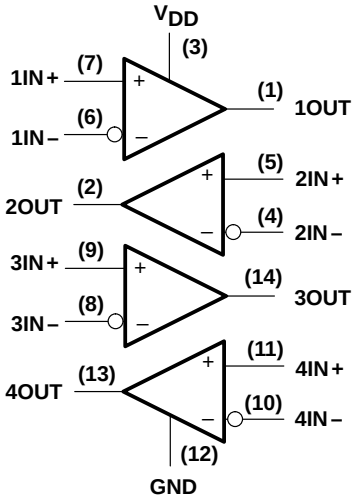

CHIP THICKNESS: 15 TYPICAL

BONDING PADS: 4 × 4 MINIMUM

T_{JMAX} = 150°C

TOLERANCES ARE ±10%

ALL DIMENSIONS ARE IN MILS.

PIN (12) IS INTERNALLY CONNECTED TO BACKSIDE OF CHIP.

absolute maximum ratings over operating free-air temperature range (unless otherwise noted)†

Supply voltage, V_{DD} (see Note 1) . . . . . 18 V
Differential input voltage, V_{ID} (see Note 2) . . . . . ±18 V
Input voltage, V_I . . . . . V_{DD}
Input voltage range, V_I . . . . . –0.3 V to 18 V
Output voltage, V_O . . . . . 18 V
Input current, I_I . . . . . ±5 mA
Output current, I_O . . . . . 20 mA
Duration of output short circuit to ground (see Note 3) . . . . . unlimited
Continuous total power dissipation . . . . . See Dissipation Rating Table
Operating free-air temperature range, T_A: TLC374C . . . . . 0°C to 70°C
TLC374I . . . . . –40°C to 85°C
TLC374M . . . . . –55°C to 125°C
TLC374Q . . . . . –40°C to 125°C
Storage temperature range, T_{stg} . . . . . –65°C to 150°C
Case temperature range for 60 seconds: FK package . . . . . 260°C
Lead temperature 1,6 mm (1/16 inch) from case for 60 seconds: D, N, or PW package . . . . . 260°C
Lead temperature 1,6 mm (1/16 inch) from case for 10 seconds: J package . . . . . 300°C

† Stresses beyond those listed under "absolute maximum ratings" may cause permanent damage to the device. These are stress ratings only, and functional operation of the device at these or any other conditions beyond those indicated under "recommended operating conditions" is not implied. Exposure to absolute-maximum-rated conditions for extended periods may affect device reliability.

NOTES: 1. All voltage values except differential voltages are with respect to network ground.
2. Differential voltages are at IN+ with respect to IN –.
3. Short circuits from outputs to V_{DD} can cause excessive heating and eventual device destruction.

DISSIPATION RATING TABLE

PACKAGE	$T_A \le 25°C$ POWER RATING	DERATING FACTOR	DERATE ABOVE T_A	$T_A = 70°C$ POWER RATING	$T_A = 85°C$ POWER RATING	$T_A = 125°C$ POWER RATING
D	500 mW	7.6 mW/°C	84°C	500 mW	494 mW	190 mW
FK	500 mW	11.0 mW/°C	104°C	500 mW	500 mW	269 mW
J	500 mW	11.0 mW/°C	104°C	500 mW	500 mW	269 mW
N	500 mW	9.2 mW/°C	95°C	500 mW	500 mW	224 mW
PW	700 mW	5.6 mW/°C	—	448 mW	—	—

recommended operating conditions

		TLC374C		TLC374I		TLC374M		TLC374Q		UNIT
		MIN	MAX	MIN	MAX	MIN	MAX	MIN	MAX	
Supply voltage, V_{DD}		3	16	3	16	4	16	3	16	V
Common-mode input voltage, V_{IC}	V_{DD} = 5 V	0	3.5	0	3.5	0	3.5	0	3.5	V
	V_{DD} = 10 V	0	8.5	0	8.5	0	8.5	0	8.5	
Operating free-air temperature, T_A		0	70	–40	85	–55	125	–40	125	°C

electrical characteristics at specified free-air temperature, V_{DD} = 5 V

PARAMETER		TEST CONDITIONS		T_A†	TLC374C MIN	TLC374C TYP	TLC374C MAX	TLC374I MIN	TLC374I TYP	TLC374I MAX	TLC374M MIN	TLC374M TYP	TLC374M MAX	UNIT
V_{IO}	Input offset voltage	$V_{IC} = V_{ICR}$min, See Note 4		25°C		1	5		1	5		1	5	mV
				Full range			6.5			7			10	
I_{IO}	Input offset current			25°C		1			1			1		pA
				MAX			0.3			1			10	nA
I_{IB}	Input bias current			25°C		5			5			5		pA
				MAX			0.6			2			20	nA
V_{ICR}	Common-mode input voltage range			25°C	0 to $V_{DD}-1$			0 to $V_{DD}-1$			0 to $V_{DD}-1$			V
				Full range	0 to $V_{DD}-1.5$			0 to $V_{DD}-1.5$			0 to $V_{DD}-1.5$			
I_{OH}	High-level output current	V_{ID} = 1 V	V_{OH} = 5 V	25°C		0.1			0.1			0.1		nA
			V_{OH} = 15 V	Full range			1			1			1	µA
V_{OL}	Low-level output voltage	V_{ID} = –1 V,	I_{OL} = 4 mA	25°C		150	400		150	400		150	400	mV
				Full range			700			700			700	
I_{OL}	Low-level output current	V_{ID} = –1 V,	V_{OL} = 1.5 V	25°C	6	16		6	16		6	16		mA
I_{DD}	Supply current (four comparators)	V_{ID} = 1 V,	No load	25°C		300	600		300	600		300	600	µA
				Full range			800			800			800	

† All characteristics are measured with zero common-mode input voltage unless otherwise noted. Full range is 0°C to 70°C for TLC374C, –40°C to 85°C for TLC374I, and –55°C to 125°C for the TLC374M, and –40°C to 125°C for TLC374Q. MAX is 70°C for TLC374C, 85°C TLC374I, and 125°C for the TLC374M, and 125°C for TLC374Q. IMPORTANT: See Parameter Measurement Information.

NOTE 4: The offset voltage limits given are the maximum values required to drive the output above 4 V or below 400 mV with a 10-kΩ resistor between the output and V_{DD}. They can be verified by applying the limit value to the input and checking for the appropriate output state.

switching characteristics, V_{DD} = 5 V, T_A = 25°C

PARAMETER	TEST CONDITIONS		TLC374C, TLC374I TLC374M, TLC374Q MIN	TYP	MAX	UNIT
Response time	R_L connected to 5 V through 5.1 kΩ, C_L = 15 pF‡, See Note 5	100-mV input step with 5-mV overdrive		650		ns
		TTL-level input step		200		

‡ C_L includes probe and jig capacitance.

NOTE 5: The response time specified is the interval between the input step function and the instant when the output crosses 1.4 V.

electrical characteristics at specified free-air temperature, V_{DD} = 5 V, T_A = 25°C (unless otherwise noted)

PARAMETER		TEST CONDITIONS		TLC374Y			UNIT
				MIN	TYP	MAX	
V_{IO}	Input offset voltage	$V_{IC} = V_{ICR}$min,	See Note 4		1	5	mV
I_{IO}	Input offset current				1		pA
I_{IB}	Input bias current				5		pA
V_{ICR}	Common-mode input voltage range			0 to V_{DD} – 1			V
I_{OH}	High-level output current	V_{ID} = 1 V,	V_{OH} = 5 V		0.1		nA
V_{OL}	Low-level output voltage	V_{ID} = –1 V,	I_{OL} = 4 mA		150	400	mV
I_{OL}	Low-level output current	V_{ID} = –1 V,	V_{OL} = 1.5 mV	6	16		mA
I_{DD}	Supply current (four comparators)	V_{ID} =1 V,	No load		300	600	µA

NOTE 4: The offset voltage limits given are the maximum values required to drive the output above 4 V or below 400 mV with a 10-kΩ resistor between the output and V_{DD}. They can be verified by applying the limit value to the input and checking for the appropriate output state.

switching characteristics, V_{DD} = 5 V, T_A = 25°C

PARAMETER	TEST CONDITIONS		TLC374Y			UNIT
			MIN	TYP	MAX	
Response time	R_L connected to 5 V through 5.1 kΩ, C_L = 15 pF†, See Note 5	100-mV input step with 5-mV overdrive		650		ns
		TTL-level input step		200		

† C_L includes probe and jig capacitance.
NOTE 4: The response time specified is the interval between the input step function and the instant when the output crosses 1.4 V.

PARAMETER MEASUREMENT INFORMATION

The digital output stage of the TLC374 can be damaged if it is held in the linear region of the transfer curve. Conventional operational amplifier/comparator testing incorporates the use of a servo loop that is designed to force the device output to a level within this linear region. Since the servo-loop method of testing cannot be used, the following alternative for measuring parameters such as input offset voltage, common-mode rejection, etc., are offered.

To verify that the input offset voltage falls within the limits specified, the limit value is applied to the input as shown in Figure 1(a). With the noninverting input positive with respect to the inverting input, the output should be high. With the input polarity reversed, the output should be low.

A similar test can be made to verify the input offset voltage at the common-mode extremes. The supply voltages can be slewed as shown in Figure 1(b) for the V_{ICR} test, rather than changing the input voltages, to provide greater accuracy.

A close approximation of the input offset voltage can be obtained by using a binary search method to vary the differential input voltage while monitoring the output state. When the applied input voltage differential is equal, but opposite in polarity to the input offset voltage, the output changes state.

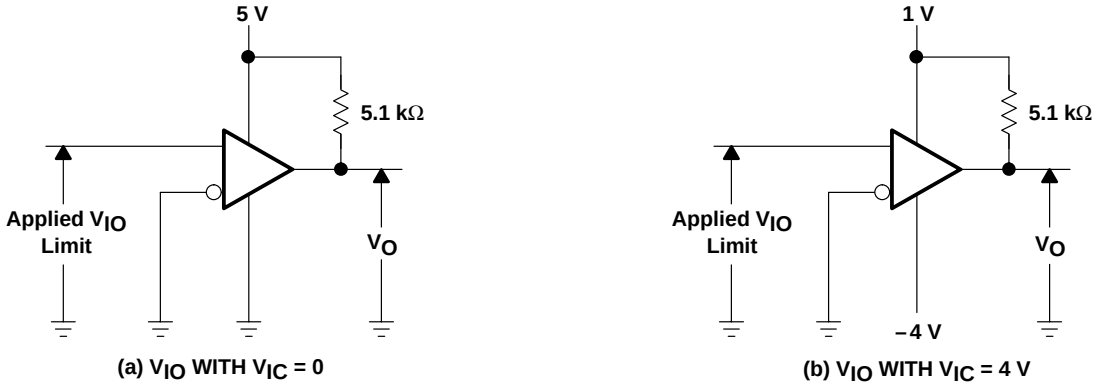

Figure 1. Method for Verifying That Input Offset Voltage is Within Specified Limits

PARAMETER MEASUREMENT INFORMATION

Figure 2 illustrates a practical circuit for direct dc measurement of input offset voltage that does not bias the comparator into the linear region. The circuit consists of a switching-mode servo loop in which U1a generates a triangular waveform of approximately 20-mV amplitude. U1b acts as a buffer with C2 and R4 removing any residual dc offset. The signal is then applied to the inverting input of the comparator under test, while the noninverting input is driven by the output of the integrator formed by U1c through the voltage divider formed by R9 and R10. The loop reaches a stable operating point when the output of the comparator under test has a duty cycle of exactly 50%, which can only occur when the incoming triangle wave is sliced symmetrically or when the voltage at the noninverting input exactly equals the input offset voltage.

Voltage divider R9 and R10 provide a step up of the input offset voltage by a factor of 100 to make measurement easier. The values of R5, R8, R9, and R10 can significantly influence the accuracy of the reading; therefore, it is suggested that their tolerance level be 1% or lower.

Measuring the extremely low values of input current requires isolation from all other sources of leakage current and compensation for the leakage of the test socket and board. With a good picoammeter, the socket and board leakage can be measured with no device in the socket. Subsequently, this open-socket leakage value can be subtracted from the measurement obtained with a device in the socket to obtain the actual input current of the device.

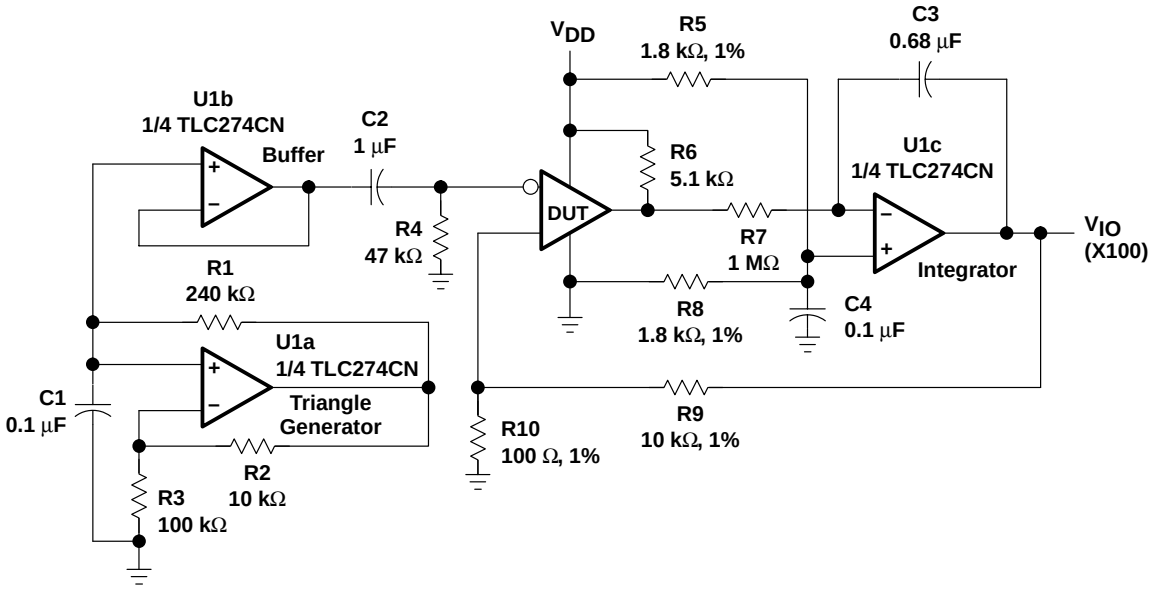

Figure 2. Test Circuit for Input Offset Voltage Measurement

PARAMETER MEASUREMENT INFORMATION

Response time is defined as the interval between the application of an input step function and the instant when the output reaches 50% of its maximum value. Response time, low-to-high-level output, is measured from the trailing edge of the input pulse. Response-time measurement at low input signal levels can be greatly affected by the input offset voltage. The offset voltage should be balanced by the adjustment at the inverting input (as shown in Figure 3) so that the circuit is just at the transition point. Then a low signal, for example, 105-mV or 5-mV overdrive, causes the output to change state.

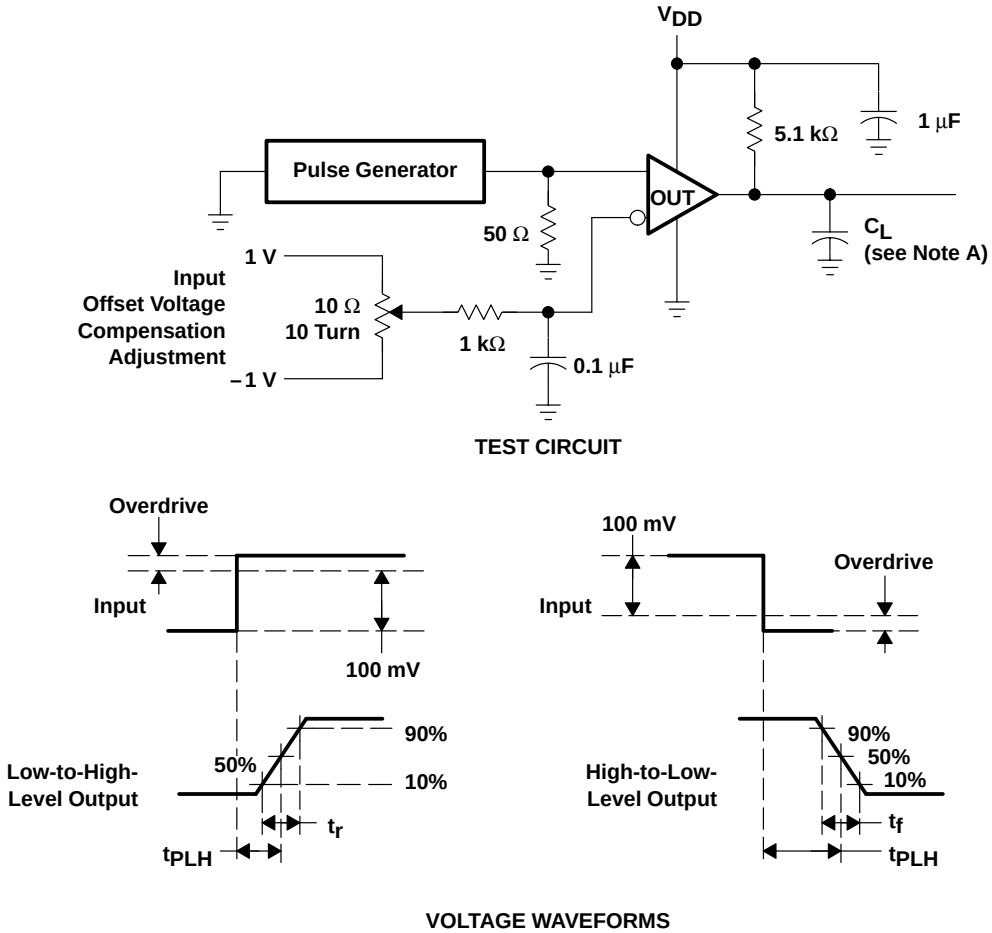

NOTE A: C_L includes probe and jig capacitance.

Figure 3. Response, Rise, and Fall Times Test Circuit and Voltage Waveforms

PRINCIPLES OF OPERATION

LinCMOS process

LinCMOS process is a linear polysilicon-gate complimentary-MOS process. Primarily designed for single-supply applications, LinCMOS products facilitate the design of a wide range of high-performance analog functions from operational amplifiers to complex mixed-mode converters.

While digital designers are experienced with CMOS, MOS technologies are relatively new for analog designers. This short guide is intended to answer the most frequently asked questions related to the quality and reliability of LinCMOS products. Further questions should be directed to the nearest TI field sales office.

electrostatic discharge

CMOS circuits are prone to gate oxide breakdown when exposed to high voltages even if the exposure is only for very short periods of time. Electrostatic discharge (ESD) is one of the most common causes of damage to CMOS devices. It can occur when a device is handled without proper consideration for environmental electrostatic charges, e.g. during board assembly. If a circuit in which one amplifier from a dual operational amplifier is being used and the unused pins are left open, high voltages tends to develop. If there is no provision for ESD protection, these voltages may eventually punch through the gate oxide and cause the device to fail. To prevent voltage buildup, each pin is protected by internal circuitry.

Standard ESD-protection circuits safely shunt the ESD current by providing a mechanism whereby one or more transistors break down at voltages higher than normal operating voltages but lower than the breakdown voltage of the input gate. This type of protection scheme is limited by leakage currents which flow through the shunting transistors during normal operation after an ESD voltage has occurred. Although these currents are small, on the order of tens of nanoamps, CMOS amplifiers are often specified to draw input currents as low as tens of picoamps.

To overcome this limitation, TI design engineers developed the patented ESD-protection circuit shown in Figure 4. This circuit can withstand several successive 1-kV ESD pulses, while reducing or eliminating leakage currents that may be drawn through the input pins. A more detailed discussion of the operation of TI's ESD-protection circuit is presented on the next page.

All input an output pins of LinCMOS and Advanced LinCMOS products have associated ESD-protection circuitry that undergoes qualification testing to withstand 1000 V discharged from a 100-pF capacitor through a 1500-Ω resistor (human body model) and 200 V from a 100-pF capacitor with no current-limiting resistor (charged device model). These tests simulate both operator and machine handling of devices during normal test and assembly operations.

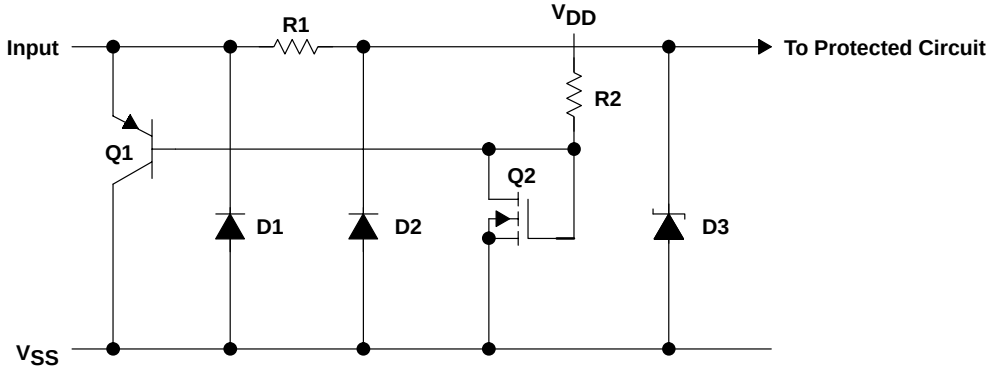

Figure 4. LinCMOS ESD-Protection Schematic

PRINCIPLES OF OPERATION

Input protection circuit operation

Texas Instruments patented protection circuitry allows for both positive- and negative-going ESD transients. These transients are characterized by extremely fast rise times and usually low energies, and can occur both when the device has all pins open and when it is installed in a circuit.

positive ESD transients

Initial positive charged energy is shunted through Q1 to V_{SS}. Q1 turns on when the voltage at the input rises above the voltage on V_{DD} by a value equal to the V_{EB} of Q1. The base current increases through R2 with input current as Q1 saturates. The base current through R2 as Q1 saturates forces the voltage at the drain and gate of Q2 to exceed its threshold level (V_T ~ 22 to 26 V) and turn on Q2. The shunted input current through Q1 to V_{SS} is now shunted through the n-channel enhancement-type MOSFET Q2 to V_{SS}. If the voltage on the input pin continues to rise, the breakdown voltage of d3 is exceeded and all remaining energy is dissipated in R1 and D3. The breakdown voltage of D3 is designed to be 24 V to 27 V, which is well below the gate oxide voltage of the circuit to be protected.

negative ESD transients

The negative charged ESD transients are shunted directly through D1. Additional energy is dissipated in R1 and D2 as D2 becomes forward-biased. The voltage seen by the protected circuit is –0.3 V to –1 V (the forward voltage of D1 and D2).

circuit-design considerations

LinCMOS products are being used in actual circuits environments that have input voltages that exceed the recommended common-mode input voltage range and activate the input protection circuit. Even under normal operation, these conditions occur during circuit power up or power down, and in many cases, when the device is being used for a signal conditioning function. The input voltages can exceed V_{ICR} and not damage the device only if the inputs are current limited. The recommended current limit shown on most product data sheets is ±5 mA. Figures 5 and 6 show typical characteristics for input voltage vs input current.

Normal operation and correct output state can be expected even when the input voltage exceeds the positive supply voltage. The input current should be externally limited even through internal positive current limiting is achieved in the input protection circuit by the action of Q1. When Q1 is on, it saturates and limits the current to approximately 5-mA collector current by design. When saturated, Q1 base current increases with input current. This current is forced into the V_{DD} pin and into the device I_{DD} or the V_{DD} supply through R2 producing the current limiting effects shown in Figure 5. This internal limiting lasts only as long as the input voltage is below the V_T of Q2.

When the input voltage exceeds the negative supply voltage, normal operation is affected and output voltage states may not be correct. Also, the isolation between channels of multiple devices (duals and quads) can be severely affected. External current limiting must be used since this current is directly shunted by D1 and D2, and no internal limiting is achieved. If normal output voltage states are required, an external input voltage clamp is required (see Figure 7).

PRINCIPLES OF OPERATION

INPUT CURRENT vs INPUT VOLTAGE†

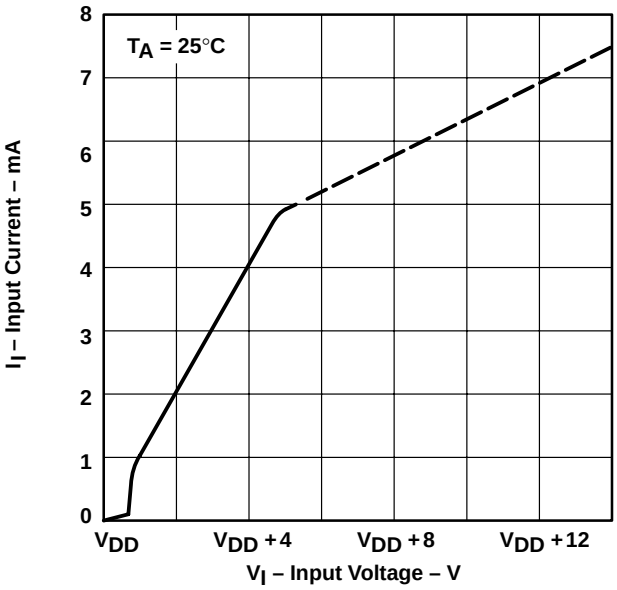

† The dashed line identifies an area of operation where some degradation of parametric performance may be experienced.

Figure 5

INPUT CURRENT vs INPUT VOLTAGE†

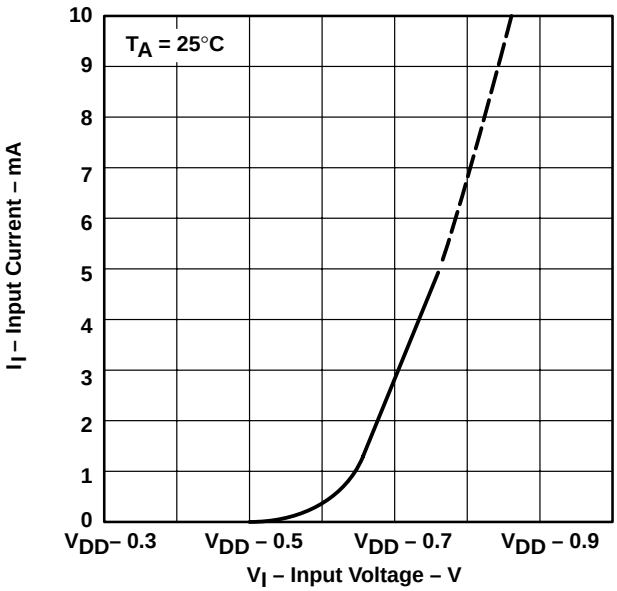

† The dashed line identifies an area of operation where some degradation of parametric performance may be experienced.

Figure 6

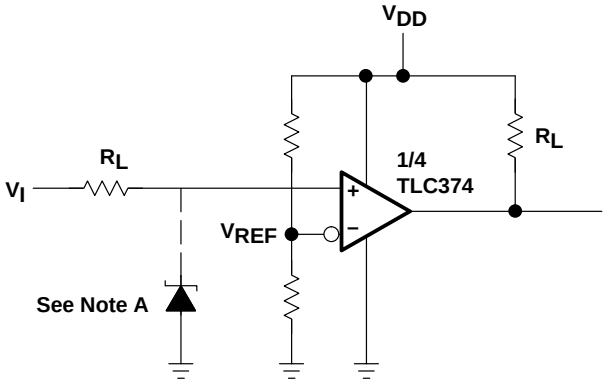

Positive Voltage Input Current Limit:

$$R_I = \frac{+V_I - V_{DD} - 0.3\ V}{5\ mA}$$

Negative Voltage Input Current Limit:

$$R_I = \frac{-V_I - V_{DD} - (0.3\ V)}{5\ mA}$$

NOTE A: If the correct output state is required when the negative input exceeds V_{SS}, a Schotty clamp is required.

Figure 7. Typical Input Current-Limiting Configuration for a LinCMOS Comparator

PACKAGING INFORMATION

Orderable Device	Status (1)	Package Type	Package Drawing	Pins	Package Qty	Eco Plan (2)	Lead finish/ Ball material (6)	MSL Peak Temp (3)	Op Temp (°C)	Device Marking (4/5)	Samples
5962-87659012A	ACTIVE	LCCC	FK	20	1	TBD	POST-PLATE	N / A for Pkg Type	-55 to 125	5962-87659012A TLC374MFKB	Samples
5962-8765901CA	ACTIVE	CDIP	J	14	1	TBD	SNPB	N / A for Pkg Type	-55 to 125	5962-8765901CA TLC374MJB	Samples
TLC374CD	ACTIVE	SOIC	D	14	50	Green (RoHS & no Sb/Br)	NIPDAU	Level-1-260C-UNLIM	0 to 70	TLC374C	Samples
TLC374CDG4	ACTIVE	SOIC	D	14	50	Green (RoHS & no Sb/Br)	NIPDAU	Level-1-260C-UNLIM	0 to 70	TLC374C	Samples
TLC374CDR	ACTIVE	SOIC	D	14	2500	Green (RoHS & no Sb/Br)	NIPDAU	Level-1-260C-UNLIM	0 to 70	TLC374C	Samples
TLC374CDRG4	ACTIVE	SOIC	D	14	2500	Green (RoHS & no Sb/Br)	NIPDAU	Level-1-260C-UNLIM	0 to 70	TLC374C	Samples
TLC374CN	ACTIVE	PDIP	N	14	25	Green (RoHS & no Sb/Br)	NIPDAU	N / A for Pkg Type	0 to 70	TLC374CN	Samples
TLC374CN-A	ACTIVE	PDIP	N	14	25	Green (RoHS & no Sb/Br)	NIPDAU	N / A for Pkg Type	0 to 70	TLC374CN_A	Samples
TLC374CNE4	ACTIVE	PDIP	N	14	25	Green (RoHS & no Sb/Br)	NIPDAU	N / A for Pkg Type	0 to 70	TLC374CN	Samples
TLC374CNS	ACTIVE	SO	NS	14	50	Green (RoHS & no Sb/Br)	NIPDAU	Level-1-260C-UNLIM	0 to 70	TLC374	Samples
TLC374CPW	ACTIVE	TSSOP	PW	14	90	Green (RoHS & no Sb/Br)	NIPDAU	Level-1-260C-UNLIM	0 to 70	P374	Samples
TLC374CPWR	ACTIVE	TSSOP	PW	14	2000	Green (RoHS & no Sb/Br)	NIPDAU	Level-1-260C-UNLIM	0 to 70	P374	Samples
TLC374ID	ACTIVE	SOIC	D	14	50	Green (RoHS & no Sb/Br)	NIPDAU	Level-1-260C-UNLIM	-40 to 85	TLC374I	Samples
TLC374IDR	ACTIVE	SOIC	D	14	2500	Green (RoHS & no Sb/Br)	NIPDAU	Level-1-260C-UNLIM	-40 to 85	TLC374I	Samples
TLC374IDRG4	ACTIVE	SOIC	D	14	2500	Green (RoHS & no Sb/Br)	NIPDAU	Level-1-260C-UNLIM	-40 to 85	TLC374I	Samples
TLC374IN	ACTIVE	PDIP	N	14	25	Green (RoHS & no Sb/Br)	NIPDAU	N / A for Pkg Type	-40 to 85	TLC374IN	Samples

Orderable Device	Status (1)	Package Type	Package Drawing	Pins	Package Qty	Eco Plan (2)	Lead finish/ Ball material (6)	MSL Peak Temp (3)	Op Temp (°C)	Device Marking (4/5)	Samples
TLC374MD	ACTIVE	SOIC	D	14	50	Green (RoHS & no Sb/Br)	NIPDAU	Level-1-260C-UNLIM	-55 to 125	TLC374M	Samples
TLC374MDG4	ACTIVE	SOIC	D	14	50	Green (RoHS & no Sb/Br)	NIPDAU	Level-1-260C-UNLIM		TLC374M	Samples
TLC374MFKB	ACTIVE	LCCC	FK	20	1	TBD	POST-PLATE	N / A for Pkg Type	-55 to 125	5962-87659012A TLC374MFKB	Samples
TLC374MJ	ACTIVE	CDIP	J	14	1	TBD	SNPB	N / A for Pkg Type	-55 to 125	TLC374MJ	Samples
TLC374MJB	ACTIVE	CDIP	J	14	1	TBD	SNPB	N / A for Pkg Type	-55 to 125	5962-8765901CA TLC374MJB	Samples

(1) The marketing status values are defined as follows:
ACTIVE: Product device recommended for new designs.
LIFEBUY: TI has announced that the device will be discontinued, and a lifetime-buy period is in effect.
NRND: Not recommended for new designs. Device is in production to support existing customers, but TI does not recommend using this part in a new design.
PREVIEW: Device has been announced but is not in production. Samples may or may not be available.
OBSOLETE: TI has discontinued the production of the device.

(2) **RoHS:** TI defines "RoHS" to mean semiconductor products that are compliant with the current EU RoHS requirements for all 10 RoHS substances, including the requirement that RoHS substance do not exceed 0.1% by weight in homogeneous materials. Where designed to be soldered at high temperatures, "RoHS" products are suitable for use in specified lead-free processes. TI may reference these types of products as "Pb-Free".
RoHS Exempt: TI defines "RoHS Exempt" to mean products that contain lead but are compliant with EU RoHS pursuant to a specific EU RoHS exemption.
Green: TI defines "Green" to mean the content of Chlorine (Cl) and Bromine (Br) based flame retardants meet JS709B low halogen requirements of <=1000ppm threshold. Antimony trioxide based flame retardants must also meet the <=1000ppm threshold requirement.

(3) MSL, Peak Temp. - The Moisture Sensitivity Level rating according to the JEDEC industry standard classifications, and peak solder temperature.

(4) There may be additional marking, which relates to the logo, the lot trace code information, or the environmental category on the device.

(5) Multiple Device Markings will be inside parentheses. Only one Device Marking contained in parentheses and separated by a "~" will appear on a device. If a line is indented then it is a continuation of the previous line and the two combined represent the entire Device Marking for that device.

(6) Lead finish/Ball material - Orderable Devices may have multiple material finish options. Finish options are separated by a vertical ruled line. Lead finish/Ball material values may wrap to two lines if the finish value exceeds the maximum column width.

Important Information and Disclaimer: The information provided on this page represents TI's knowledge and belief as of the date that it is provided. TI bases its knowledge and belief on information provided by third parties, and makes no representation or warranty as to the accuracy of such information. Efforts are underway to better integrate information from third parties. TI has taken and continues to take reasonable steps to provide representative and accurate information but may not have conducted destructive testing or chemical analysis on incoming materials and chemicals. TI and TI suppliers consider certain information to be proprietary, and thus CAS numbers and other limited information may not be available for release.

In no event shall TI's liability arising out of such information exceed the total purchase price of the TI part(s) at issue in this document sold by TI to Customer on an annual basis.

OTHER QUALIFIED VERSIONS OF TLC374, TLC374M :

- Catalog: TLC374
- Military: TLC374M

NOTE: Qualified Version Definitions:

- Catalog - TI's standard catalog product
- Military - QML certified for Military and Defense Applications

TAPE AND REEL INFORMATION

REEL DIMENSIONS

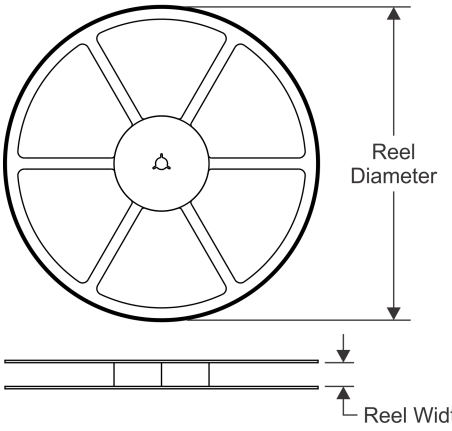

TAPE DIMENSIONS

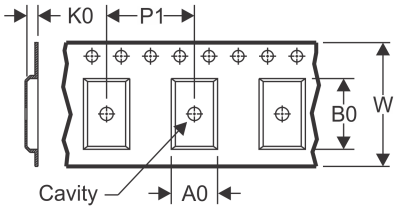

A0	Dimension designed to accommodate the component width
B0	Dimension designed to accommodate the component length
K0	Dimension designed to accommodate the component thickness
W	Overall width of the carrier tape
P1	Pitch between successive cavity centers

QUADRANT ASSIGNMENTS FOR PIN 1 ORIENTATION IN TAPE

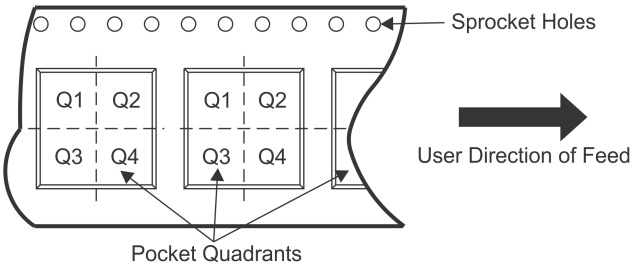

*All dimensions are nominal

Device	Package Type	Package Drawing	Pins	SPQ	Reel Diameter (mm)	Reel Width W1 (mm)	A0 (mm)	B0 (mm)	K0 (mm)	P1 (mm)	W (mm)	Pin1 Quadrant
TLC374CDR	SOIC	D	14	2500	330.0	16.4	6.5	9.0	2.1	8.0	16.0	Q1
TLC374CPWR	TSSOP	PW	14	2000	330.0	12.4	6.9	5.6	1.6	8.0	12.0	Q1
TLC374IDR	SOIC	D	14	2500	330.0	16.4	6.5	9.0	2.1	8.0	16.0	Q1

TAPE AND REEL BOX DIMENSIONS

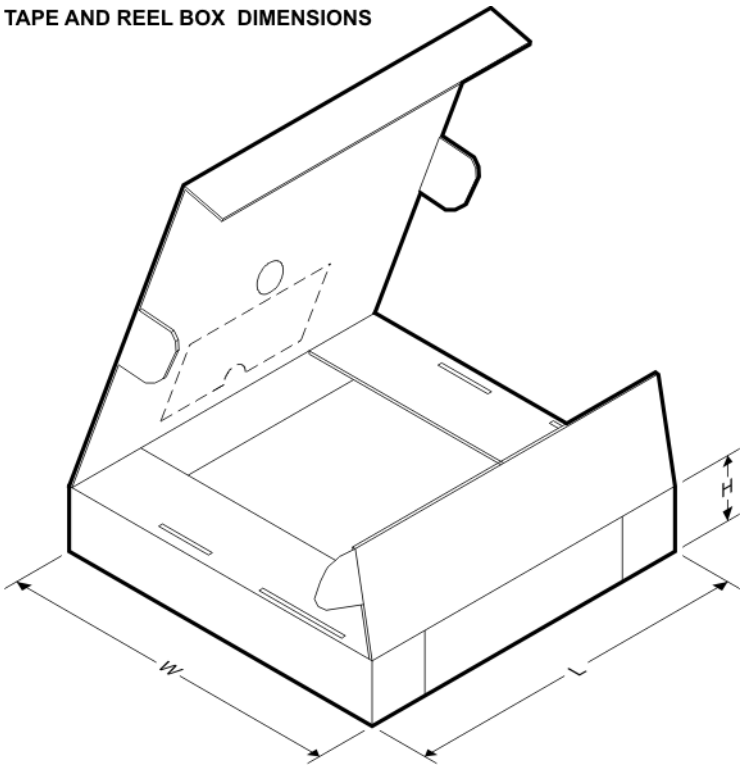

*All dimensions are nominal

Device	Package Type	Package Drawing	Pins	SPQ	Length (mm)	Width (mm)	Height (mm)
TLC374CDR	SOIC	D	14	2500	333.2	345.9	28.6
TLC374CPWR	TSSOP	PW	14	2000	367.0	367.0	35.0
TLC374IDR	SOIC	D	14	2500	350.0	350.0	43.0

J 14 CDIP - 5.08 mm max height

CERAMIC DUAL IN LINE PACKAGE

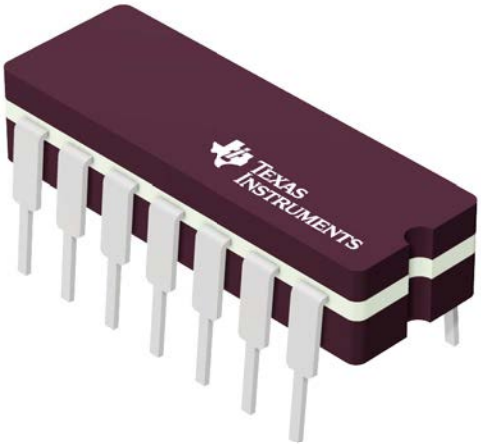

Images above are just a representation of the package family, actual package may vary.
Refer to the product data sheet for package details.

4040083-5/G

PACKAGE OUTLINE

J0014A

CDIP - 5.08 mm max height

CERAMIC DUAL IN LINE PACKAGE

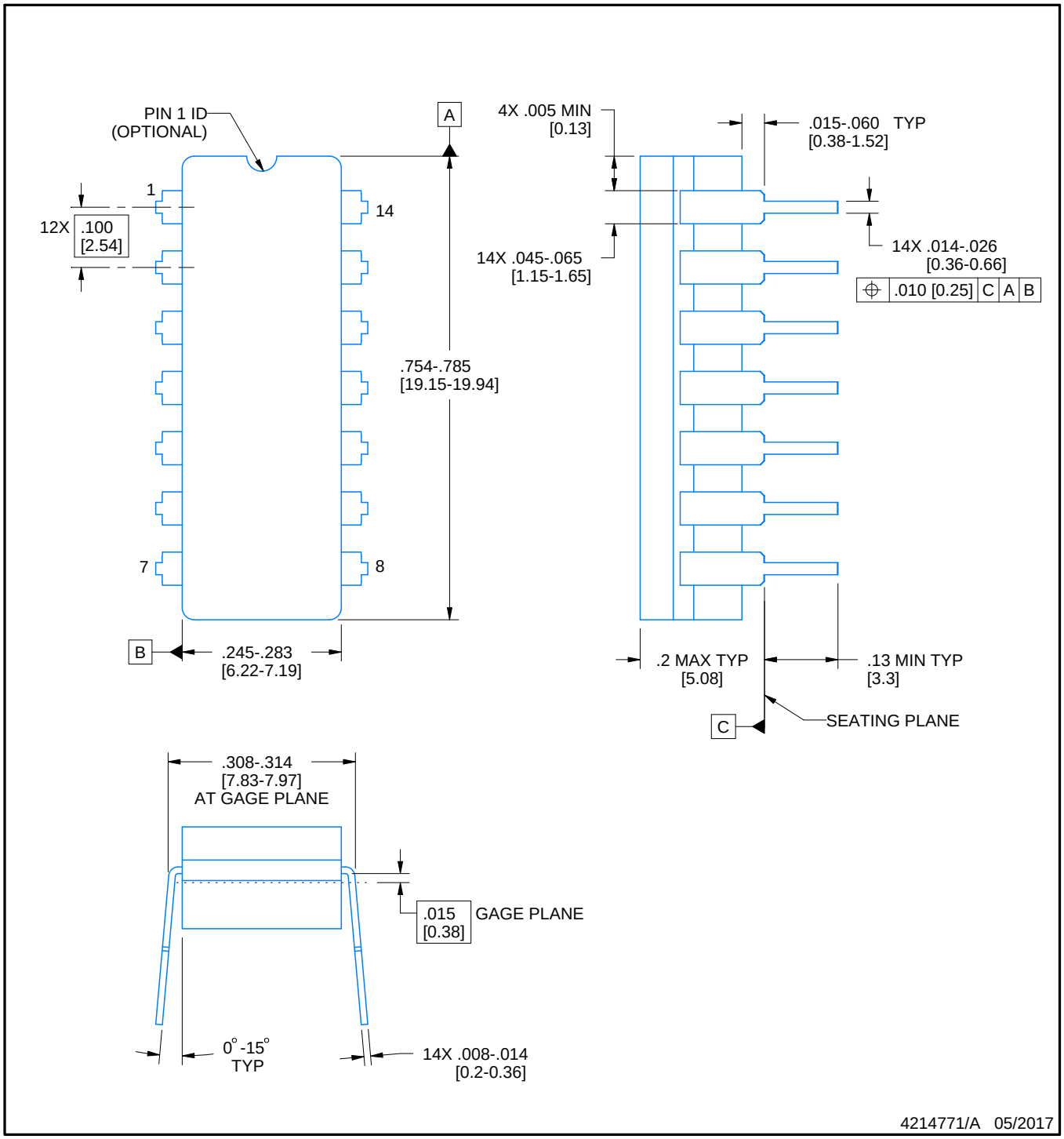

NOTES:

1. All controlling linear dimensions are in inches. Dimensions in brackets are in millimeters. Any dimension in brackets or parenthesis are for reference only. Dimensioning and tolerancing per ASME Y14.5M.
2. This drawing is subject to change without notice.
3. This package is hermitically sealed with a ceramic lid using glass frit.
4. Index point is provided on cap for terminal identification only and on press ceramic glass frit seal only.
5. Falls within MIL-STD-1835 and GDIP1-T14.

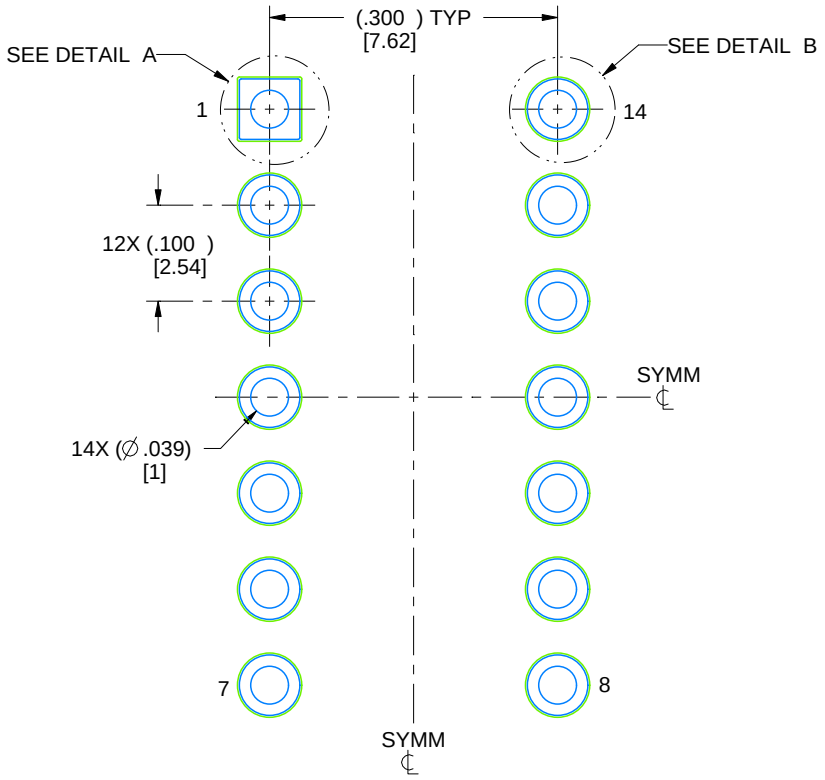

LAND PATTERN EXAMPLE
NON-SOLDER MASK DEFINED
SCALE: 5X

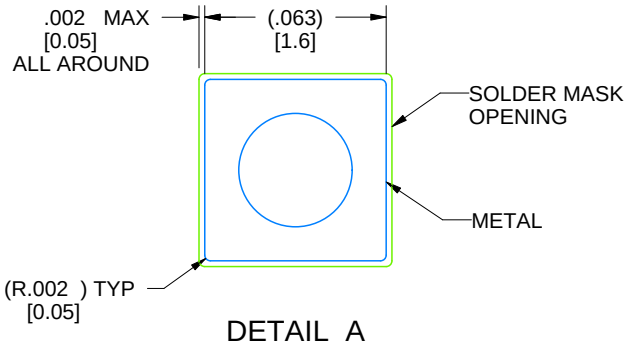

DETAIL A
SCALE: 15X

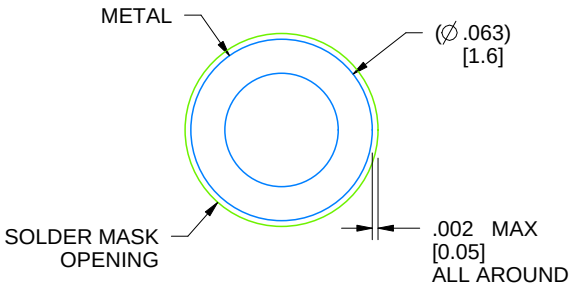

DETAIL B
13X, SCALE: 15X

4214771/A 05/2017

D (R–PDSO–G14) PLASTIC SMALL OUTLINE

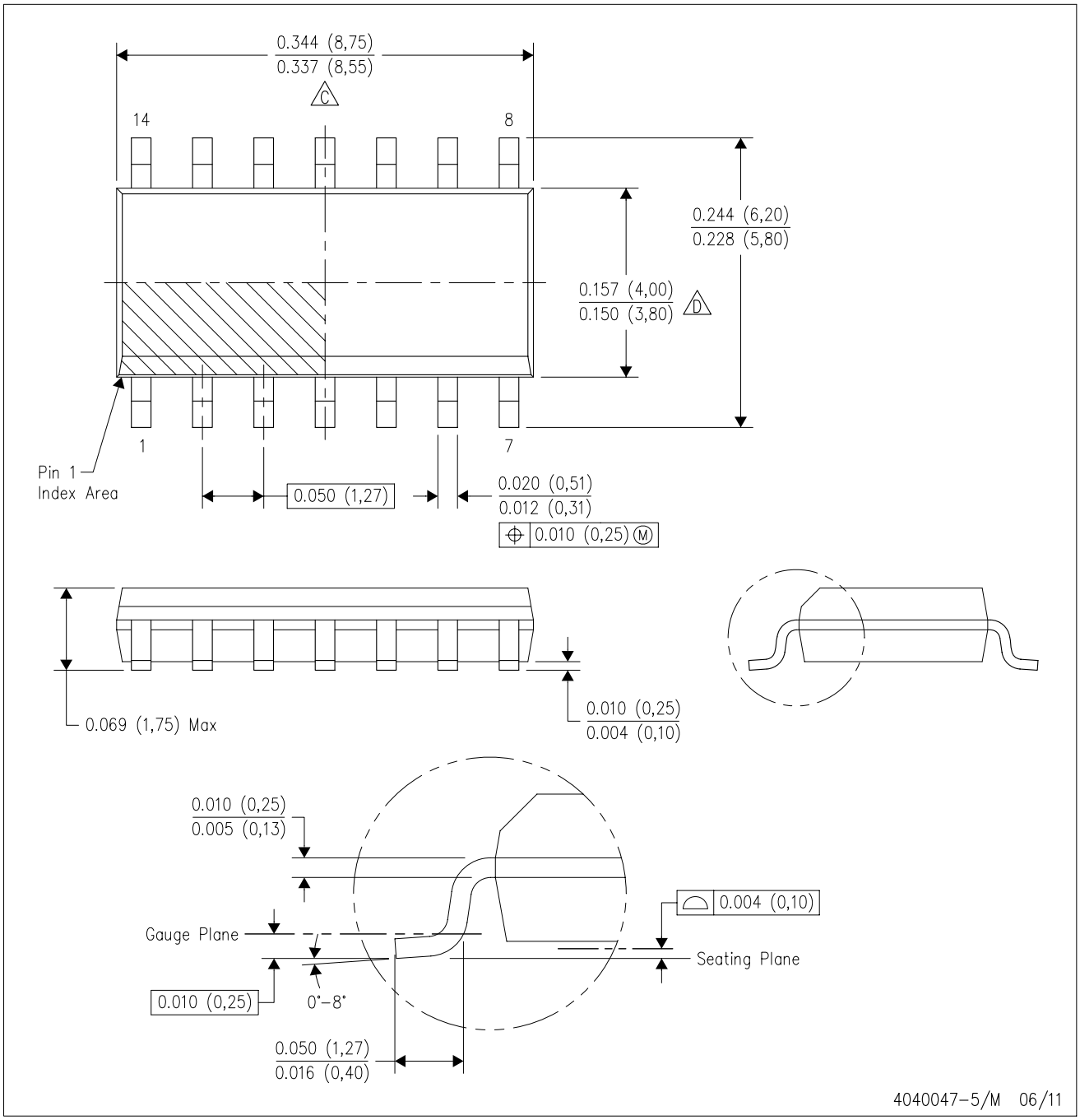

NOTES:
A. All linear dimensions are in inches (millimeters).
B. This drawing is subject to change without notice.
C. Body length does not include mold flash, protrusions, or gate burrs. Mold flash, protrusions, or gate burrs shall not exceed 0.006 (0,15) each side.
D. Body width does not include interlead flash. Interlead flash shall not exceed 0.017 (0,43) each side.
E. Reference JEDEC MS–012 variation AB.

D (R–PDSO–G14) PLASTIC SMALL OUTLINE

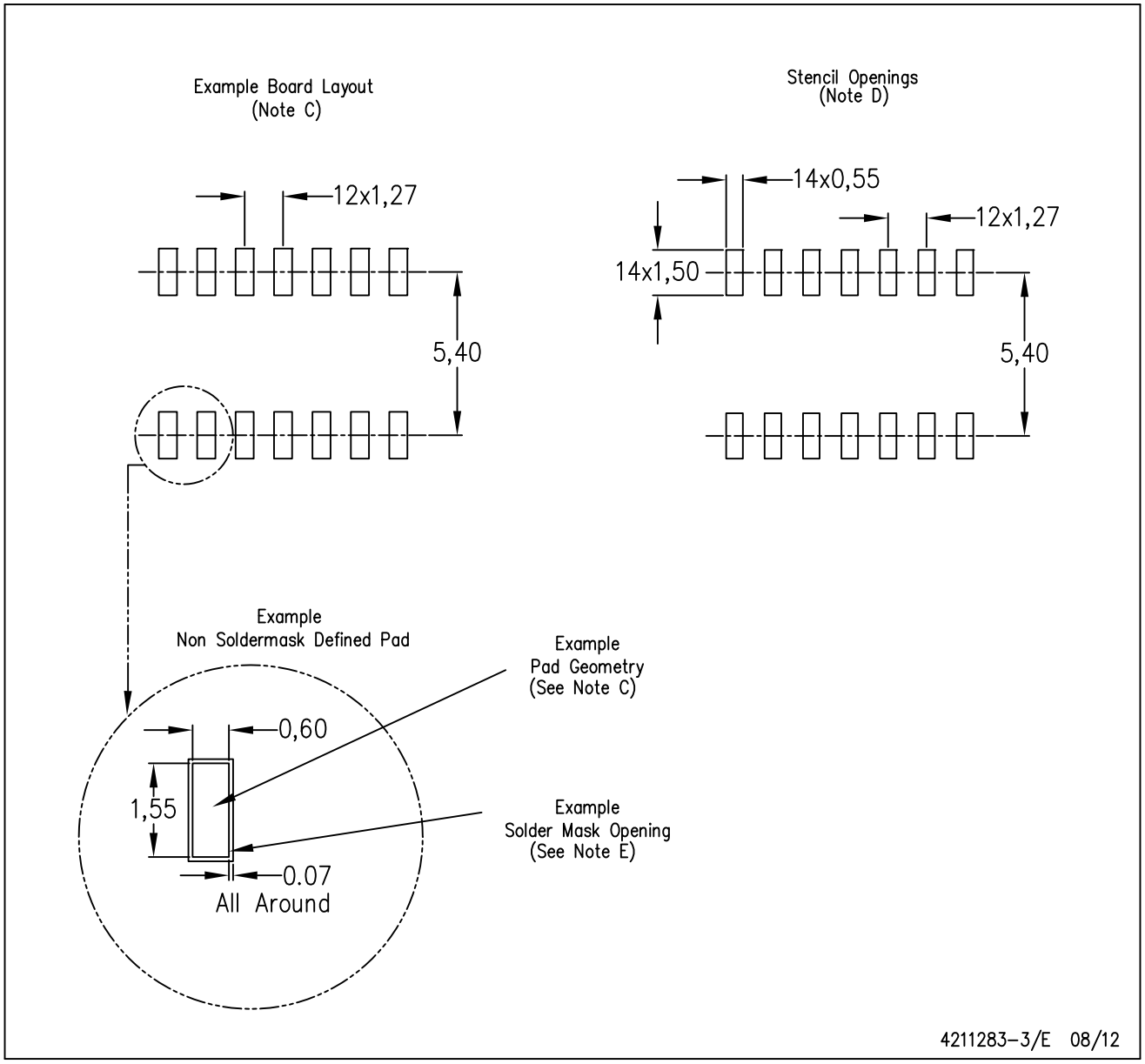

NOTES:
A. All linear dimensions are in millimeters.
B. This drawing is subject to change without notice.
C. Publication IPC–7351 is recommended for alternate designs.
D. Laser cutting apertures with trapezoidal walls and also rounding corners will offer better paste release. Customers should contact their board assembly site for stencil design recommendations. Refer to IPC–7525 for other stencil recommendations.
E. Customers should contact their board fabrication site for solder mask tolerances between and around signal pads.

PW (R–PDSO–G14) PLASTIC SMALL OUTLINE

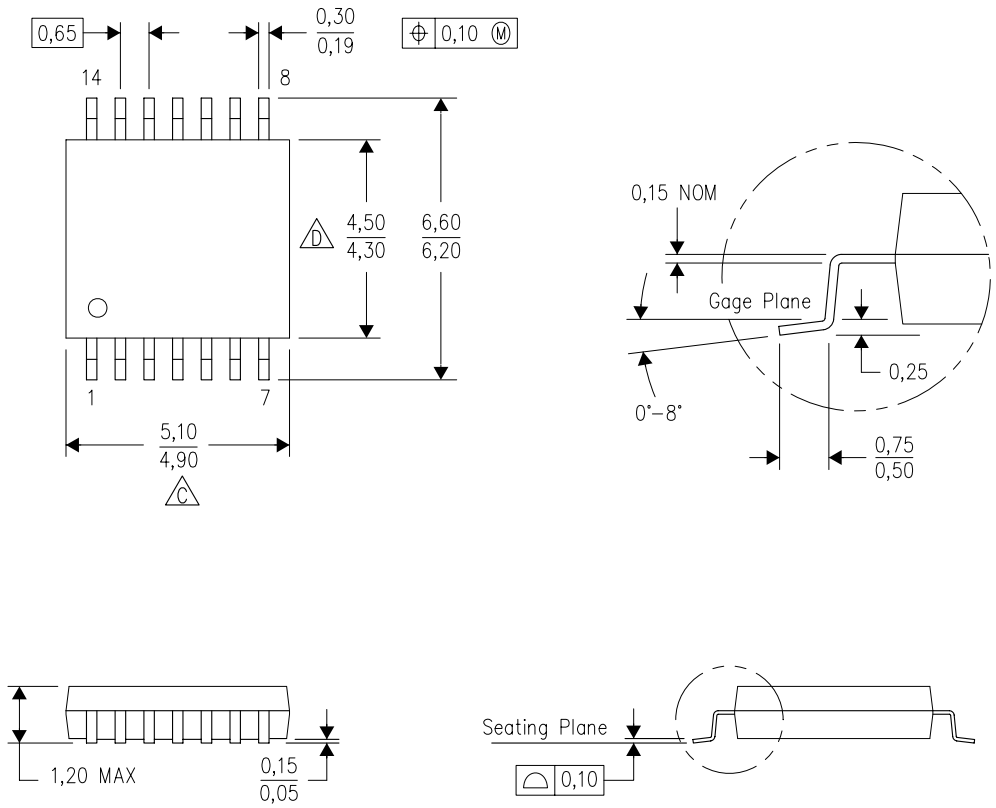

NOTES:
A. All linear dimensions are in millimeters. Dimensioning and tolerancing per ASME Y14.5M–1994.
B. This drawing is subject to change without notice.
C. Body length does not include mold flash, protrusions, or gate burrs. Mold flash, protrusions, or gate burrs shall not exceed 0,15 each side.
D. Body width does not include interlead flash. Interlead flash shall not exceed 0,25 each side.
E. Falls within JEDEC MO–153

PW (R–PDSO–G14) PLASTIC SMALL OUTLINE

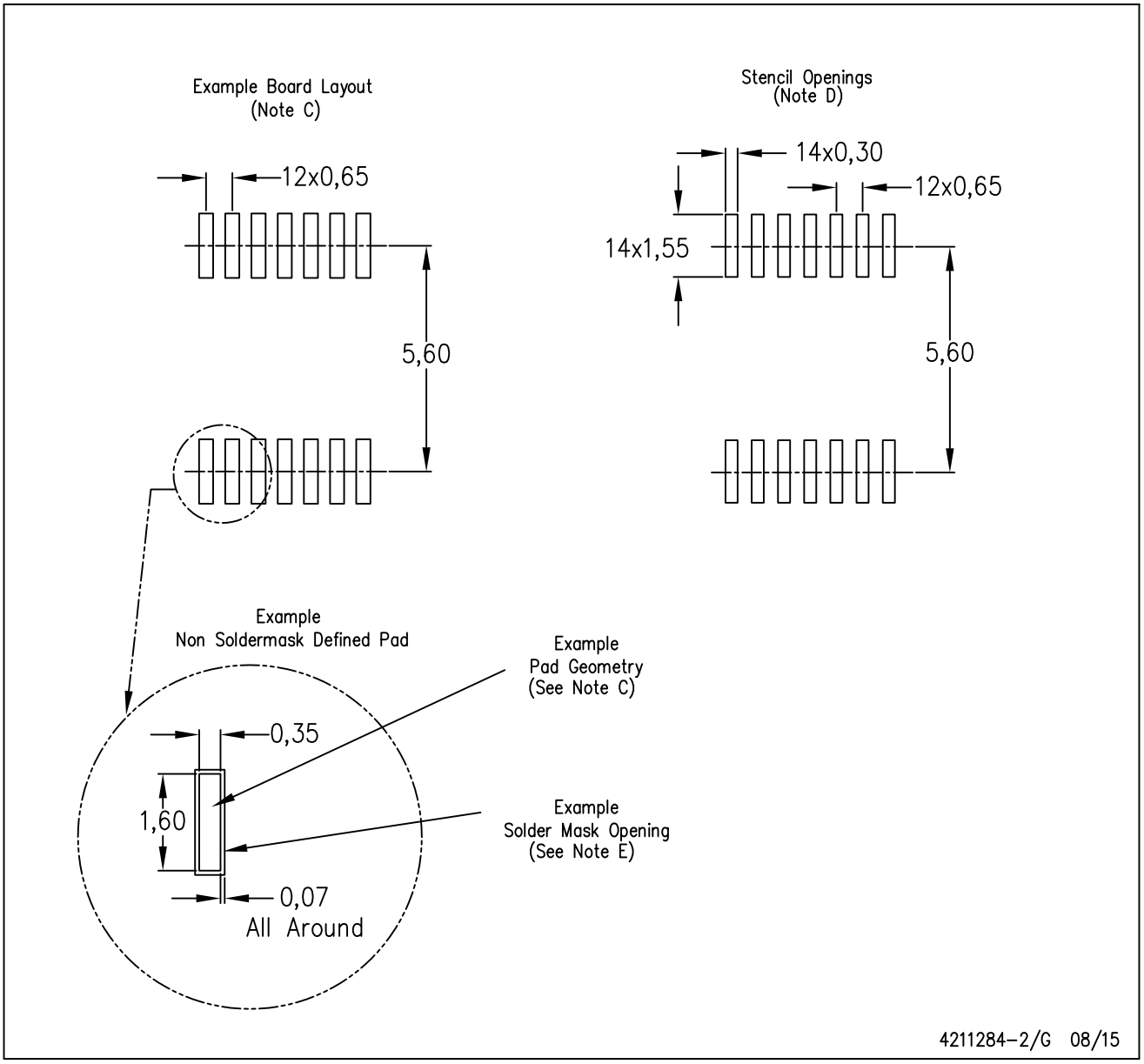

NOTES:
A. All linear dimensions are in millimeters.
B. This drawing is subject to change without notice.
C. Publication IPC–7351 is recommended for alternate designs.
D. Laser cutting apertures with trapezoidal walls and also rounding corners will offer better paste release. Customers should contact their board assembly site for stencil design recommendations. Refer to IPC–7525 for other stencil recommendations.
E. Customers should contact their board fabrication site for solder mask tolerances between and around signal pads.

FK (S–CQCC–N**) LEADLESS CERAMIC CHIP CARRIER

28 TERMINAL SHOWN

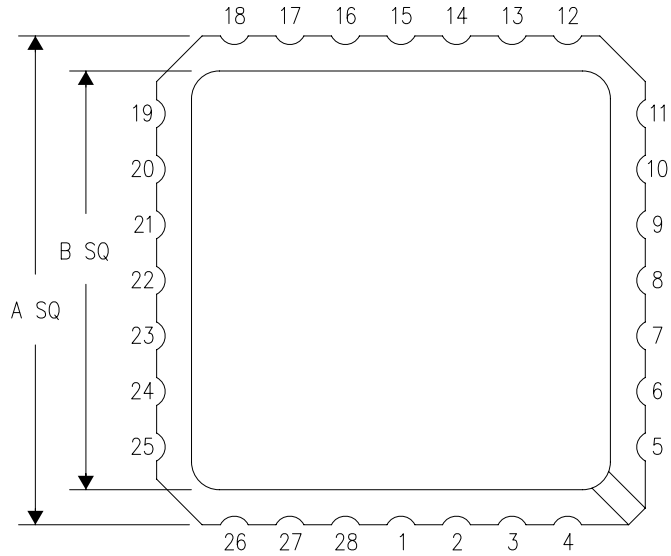

NO. OF TERMINALS **	A		B	
	MIN	MAX	MIN	MAX
20	0.342 (8,69)	0.358 (9,09)	0.307 (7,80)	0.358 (9,09)
28	0.442 (11,23)	0.458 (11,63)	0.406 (10,31)	0.458 (11,63)
44	0.640 (16,26)	0.660 (16,76)	0.495 (12,58)	0.560 (14,22)
52	0.740 (18,78)	0.761 (19,32)	0.495 (12,58)	0.560 (14,22)
68	0.938 (23,83)	0.962 (24,43)	0.850 (21,6)	0.858 (21,8)
84	1.141 (28,99)	1.165 (29,59)	1.047 (26,6)	1.063 (27,0)

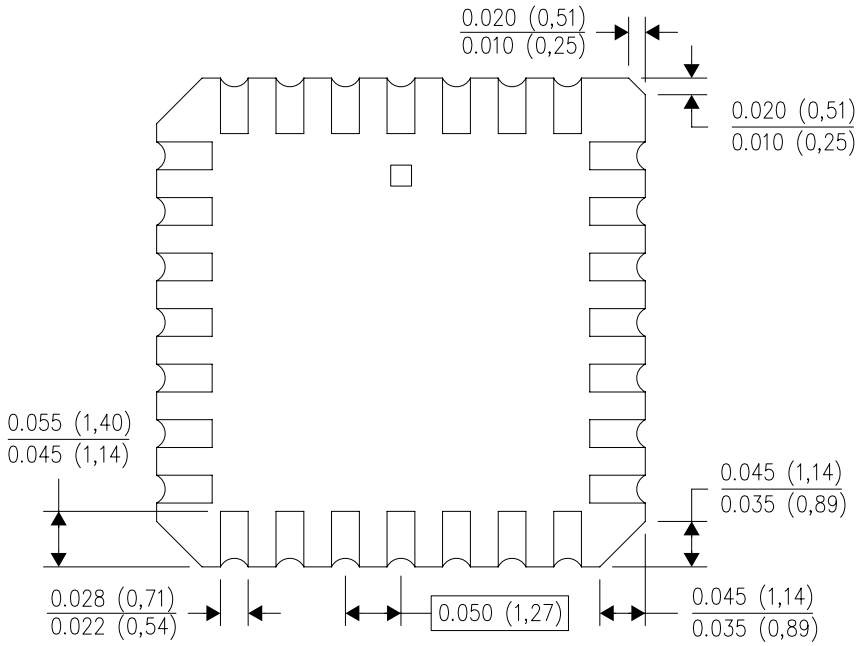

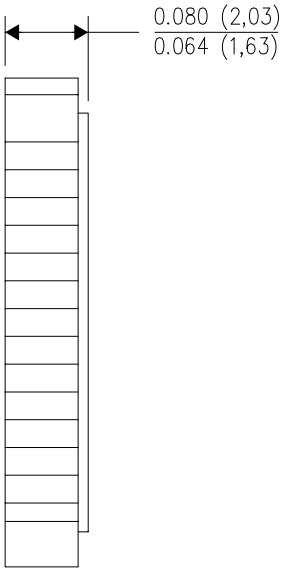

4040140/D 01/11

NOTES:
A. All linear dimensions are in inches (millimeters).
B. This drawing is subject to change without notice.
C. This package can be hermetically sealed with a metal lid.
D. Falls within JEDEC MS–004

MECHANICAL DATA

NS (R-PDSO-G)** **PLASTIC SMALL-OUTLINE PACKAGE**

14-PINS SHOWN

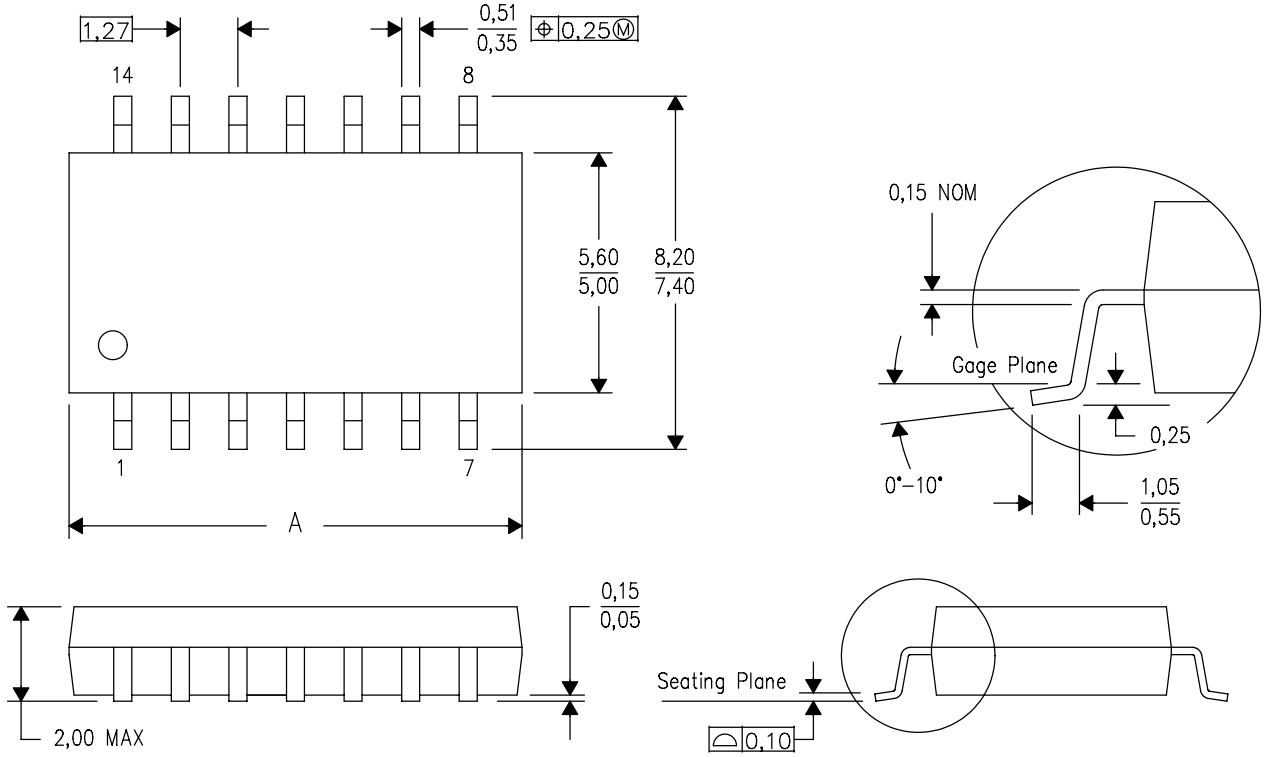

DIM \ PINS **	14	16	20	24
A MAX	10,50	10,50	12,90	15,30
A MIN	9,90	9,90	12,30	14,70

4040062/C 03/03

NOTES:
A. All linear dimensions are in millimeters.
B. This drawing is subject to change without notice.
C. Body dimensions do not include mold flash or protrusion, not to exceed 0,15.

N (R–PDIP–T**) PLASTIC DUAL–IN–LINE PACKAGE

16 PINS SHOWN

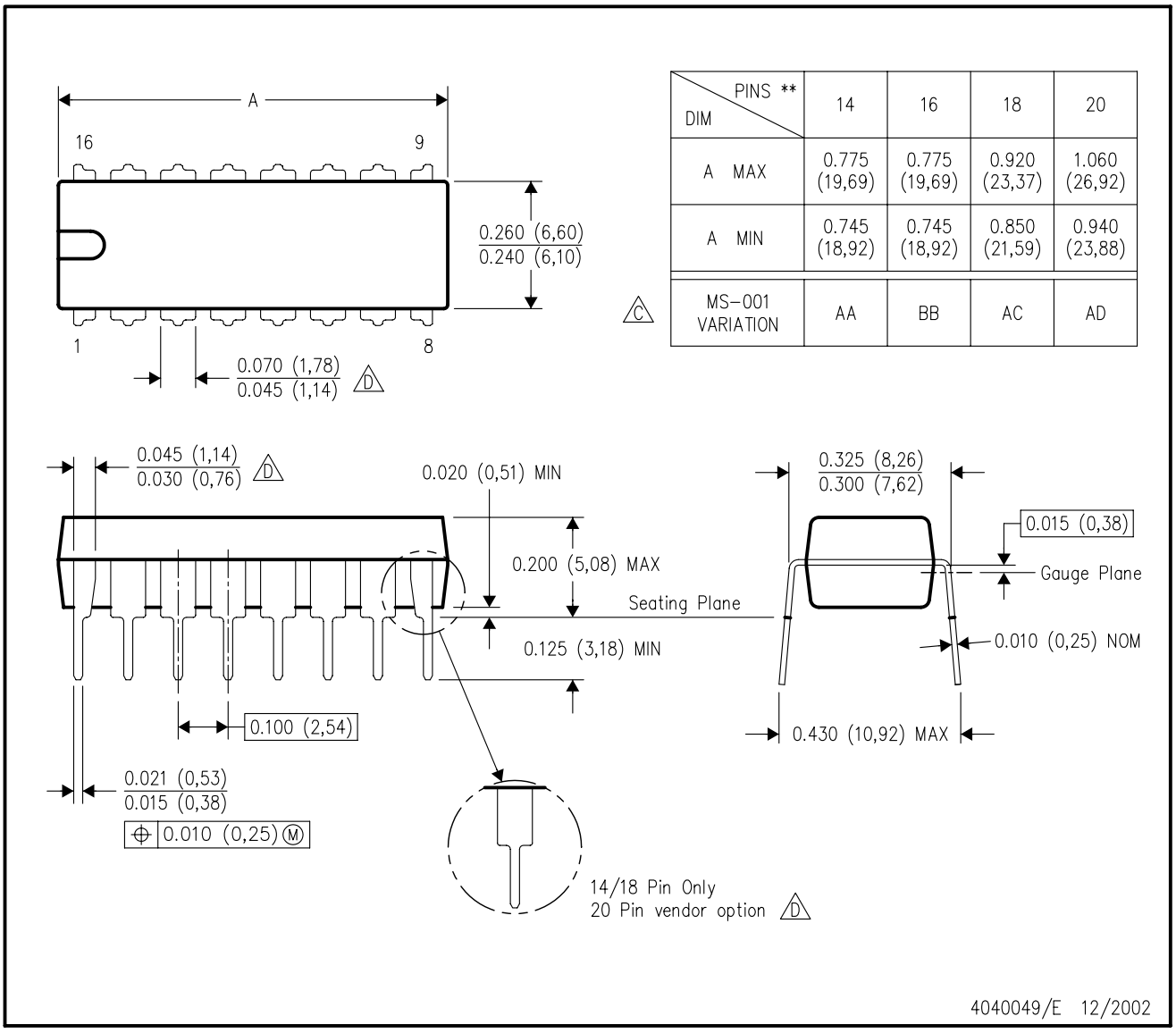

DIM \ PINS **	14	16	18	20
A MAX	0.775 (19,69)	0.775 (19,69)	0.920 (23,37)	1.060 (26,92)
A MIN	0.745 (18,92)	0.745 (18,92)	0.850 (21,59)	0.940 (23,88)
MS–001 VARIATION (C)	AA	BB	AC	AD

NOTES:
A. All linear dimensions are in inches (millimeters).
B. This drawing is subject to change without notice.
C. Falls within JEDEC MS–001, except 18 and 20 pin minimum body length (Dim A).
D. The 20 pin end lead shoulder width is a vendor option, either half or full width.

IMPORTANT NOTICE AND DISCLAIMER

TI PROVIDES TECHNICAL AND RELIABILITY DATA (INCLUDING DATASHEETS), DESIGN RESOURCES (INCLUDING REFERENCE DESIGNS), APPLICATION OR OTHER DESIGN ADVICE, WEB TOOLS, SAFETY INFORMATION, AND OTHER RESOURCES “AS IS” AND WITH ALL FAULTS, AND DISCLAIMS ALL WARRANTIES, EXPRESS AND IMPLIED, INCLUDING WITHOUT LIMITATION ANY IMPLIED WARRANTIES OF MERCHANTABILITY, FITNESS FOR A PARTICULAR PURPOSE OR NON-INFRINGEMENT OF THIRD PARTY INTELLECTUAL PROPERTY RIGHTS.

These resources are intended for skilled developers designing with TI products. You are solely responsible for (1) selecting the appropriate TI products for your application, (2) designing, validating and testing your application, and (3) ensuring your application meets applicable standards, and any other safety, security, or other requirements. These resources are subject to change without notice. TI grants you permission to use these resources only for development of an application that uses the TI products described in the resource. Other reproduction and display of these resources is prohibited. No license is granted to any other TI intellectual property right or to any third party intellectual property right. TI disclaims responsibility for, and you will fully indemnify TI and its representatives against, any claims, damages, costs, losses, and liabilities arising out of your use of these resources.

TI’s products are provided subject to TI’s Terms of Sale (www.ti.com/legal/termsofsale.html) or other applicable terms available either on ti.com or provided in conjunction with such TI products. TI’s provision of these resources does not expand or otherwise alter TI’s applicable warranties or warranty disclaimers for TI products.

Mailing Address: Texas Instruments, Post Office Box 655303, Dallas, Texas 75265
Copyright © 2020, Texas Instruments Incorporated