LM3405A 1.6MHz, 1A Constant Current Buck LED Driver with Internal Compensation in Tiny SOT and VSSOP PowerPAD Packages

Check for Samples: LM3405A

FEATURES

- **V_{IN} Operating Range of 3V to 22V**
- **Drives up to 5 High-Brightness LEDs in Series at 1A**
- **Thin SOT-6 package and VSSOP-8 PowerPAD Packages**
- **1.6MHz Switching Frequency**
- **EN/DIM Input for Enabling and PWM Dimming of LEDs**
- **300mΩ NMOS Switch**
- **40nA Shutdown Current at V_{IN} = 5V**
- **Internally Compensated Current-mode Control**
- **Cycle-by-cycle Current Limit**
- **Input Voltage UVLO**
- **Over-current Protection**
- **Thermal Shutdown**

DESCRIPTION

The LM3405A is a 1A constant current buck LED driver designed to provide a simple, high efficiency solution for driving high power LEDs. With a 0.205V reference voltage feedback control to minimize power dissipation, an external resistor sets the current as needed for driving various types of LEDs. Switching frequency is internally set to 1.6MHz, allowing small surface mount inductors and capacitors to be used. The LM3405A utilizes current-mode control and internal compensation offering ease of use and predictable, high performance regulation over a wide range of operating conditions. With a maximum input voltage of 22V, it can drive up to 5 High-Brightness LEDs in series at 1A forward current, with the single LED forward voltage of approximately 3.7V. Additional features include user accessible EN/DIM pin for enabling and PWM dimming of LEDs, thermal shutdown, cycle-by-cycle current limit and over-current protection.

APPLICATIONS

- **LED Driver**
- **Constant Current Source**
- **Industrial Lighting**
- **LED Flashlights**
- **LED Lightbulbs**

TYPICAL APPLICATION CIRCUIT

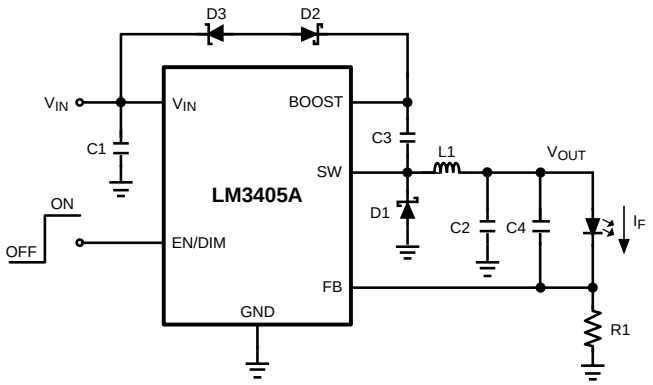

Efficiency vs LED Current (V_{IN} = 12V)

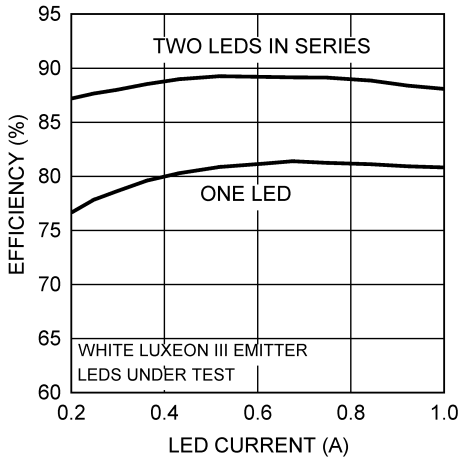

Please be aware that an important notice concerning availability, standard warranty, and use in critical applications of Texas Instruments semiconductor products and disclaimers thereto appears at the end of this data sheet.

All trademarks are the property of their respective owners.

PRODUCTION DATA information is current as of publication date. Products conform to specifications per the terms of the Texas Instruments standard warranty. Production processing does not necessarily include testing of all parameters.

Copyright © 2007–2013, Texas Instruments Incorporated

These devices have limited built-in ESD protection. The leads should be shorted together or the device placed in conductive foam during storage or handling to prevent electrostatic damage to the MOS gates.

CONNECTION DIAGRAMS

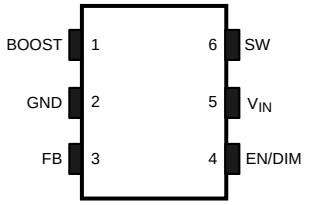

Figure 1. 6-Lead SOT Package
See Package Number DDC0006A

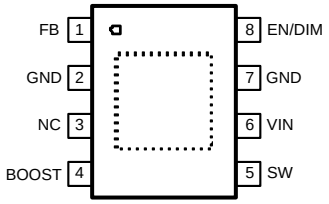

Figure 2. 8-Lead VSSOP PowerPAD Package
See Package Number DGN0008A

SOT-6 Pin Descriptions

Pin No.	Name	Application Information
1	BOOST	Boost voltage that drives the NMOS output switch. A bootstrap capacitor is connected between the BOOST and SW pins.
2	GND	Signal and power ground pin. Place the bottom resistor of the feedback network as close as possible to this pin.
3	FB	Feedback pin. Connect FB to external resistor divider to set output voltage.
4	EN/DIM	Enable control input. Logic high enables operation. Toggling this pin with a periodic logic square wave of varying duty cycle at different frequencies controls the brightness of LEDs. Do not allow this pin to float or be greater than V_{IN} + 0.3V.
5	VIN	Input supply voltage. Connect a bypass capacitor locally from this pin to GND.
6	SW	Switch pin. Connect this pin to the inductor, catch diode, and bootstrap capacitor.

VSSOP-8 PowerPAD Pin Descriptions

Pin No.	Name	Function
1	FB	Feedback pin. Connect FB to external resistor divider to set output voltage.
2, 7	GND	Signal and power ground pin. Place the bottom resistor of the feedback network as close as possible to this pin. Tie pins 2, 7 and DAP to one GND plane.
3	NC	No Connection
4	BOOST	Boost voltage that drives the NMOS output switch. A bootstrap capacitor is connected between the BOOST and SW pins.
5	SW	Switch pin. Connect this pin to the inductor, catch diode, and bootstrap capacitor.
6	VIN	Input supply voltage. Connect a bypass capacitor locally from this pin to GND.
8	EN/DIM	Enable control input. Logic high enables operation. Toggling this pin with a periodic logic square wave of varying duty cycle at different frequencies controls the brightness of LEDs. Do not allow this pin to float or be greater than V_{IN} + 0.3V.
DAP		Attach to power ground pin

Copyright © 2007–2013, Texas Instruments Incorporated

ABSOLUTE MAXIMUM RATINGS (1)

If Military/Aerospace specified devices are required, contact the Texas Instruments Sales Office/Distributors for availability and specifications.

	VALUE / UNIT
V_{IN}	-0.5V to 24V
SW Voltage	-0.5V to 24V
Boost Voltage	-0.5V to 30V
Boost to SW Voltage	-0.5V to 6.0V
FB Voltage	-0.5V to 3.0V
EN/DIM Voltage	-0.5V to (V_{IN} + 0.3V)
Junction Temperature	150°C
ESD Susceptibility (2)	2kV
Storage Temperature	-65°C to +150°C
Soldering Information Infrared/Convection Reflow (15sec)	220°C

(1) Absolute Maximum Ratings are limits beyond which damage to the device may occur. Operating Ratings define the conditions under which the device is intended to be functional. For specifications and test conditions, see the Electrical Characteristics.
(2) Human body model, 1.5kΩ in series with 100pF.

RECOMMENDED OPERATING CONDITIONS (1)

	VALUE / UNIT
V_{IN}	3V to 22V
EN/DIM voltage	-0.5V to (V_{IN} + 0.3V)
Boost to SW Voltage	2.5V to 5.5V
Junction Temperature Range	-40°C to +125°C
Thermal Resistance θ_{JA} (2)	SOT 118°C/W
Thermal Resistance θ_{JA} (3)	eMSOP8 73°C/W
I_{LED} SOT package	400mA
I_{LED} VSSOP PowerPAD package	1A

(1) Absolute Maximum Ratings are limits beyond which damage to the device may occur. Operating Ratings define the conditions under which the device is intended to be functional. For specifications and test conditions, see the Electrical Characteristics.
(2) Thermal shutdown will occur if the junction temperature (T_J) exceeds 165°C. The maximum allowable power dissipation (P_D) at any ambient temperature (T_A) is $P_D = (T_{J(MAX)} – T_A)/\theta_{JA}$. This number applies to packages soldered directly onto a 3" x 3" PC board with 2oz. copper on 4 layers in still air. For a 2 layer board using 1 oz. copper in still air, θ_{JA} = 204°C/W.
(3) Thermal shutdown will occur if the junction temperature (T_J) exceeds 165°C. The maximum allowable power dissipation (P_D) at any ambient temperature (T_A) is $P_D = (T_{J(MAX)} – T_A)/\theta_{JA}$. This number applies to packages soldered directly onto a 1" x 0.75" PC board with 1oz. copper on 4 layers in still air.

Copyright © 2007–2013, Texas Instruments Incorporated

ELECTRICAL CHARACTERISTICS

Unless otherwise specified, V_{IN} = 12V. Limits in standard type are for T_J = 25°C only; limits in **boldface type** apply over the junction temperature (T_J) range of -40°C to +125°C. Minimum and Maximum limits are specified through test, design, or statistical correlation. Typical values represent the most likely parametric norm, and are provided for reference purposes only.

Parameter		Test Conditions	Min	Typ	Max	Units
V_{FB}	Feedback Voltage		**0.188**	0.205	**0.220**	V
$\Delta V_{FB}/(\Delta V_{IN} x V_{FB})$	Feedback Voltage Line Regulation	V_{IN} = 3V to 22V		0.01		%/V
I_{FB}	Feedback Input Bias Current	Sink/Source		10	**250**	nA
UVLO	Under-voltage Lockout	V_{IN} Rising		2.74	**2.95**	V
	Under-voltage Lockout	V_{IN} Falling	**1.9**	2.3		V
	UVLO Hysteresis			0.44		V
f_{SW}	Switching Frequency		**1.2**	1.6	**1.9**	MHz
D_{MAX}	Maximum Duty Cycle	V_{FB} = 0V	**85**	94		%
$R_{DS(ON)}$	Switch ON Resistance	SOT (V_{BOOST} - V_{SW} = 3V)		300	**600**	mΩ
		MSOP (V_{BOOST} - V_{SW} = 3V)		360	**700**	
I_{CL}	Switch Current Limit	V_{BOOST} - V_{SW} = 3V, V_{IN} = 3V	**1.2**	2.0	**2.8**	A
I_Q	Quiescent Current	Switching, V_{FB} = 0.195V		1.8	**2.8**	mA
	Quiescent Current (Shutdown)	$V_{EN/DIM}$ = 0V		0.3		µA
V_{EN/DIM_TH}	Enable Threshold Voltage	$V_{EN/DIM}$ Rising	**1.8**			V
	Shutdown Threshold Voltage	$V_{EN/DIM}$ Falling			**0.4**	V
$I_{EN/DIM}$	EN/DIM Pin Current	Sink/Source		0.01		µA
I_{SW}	Switch Leakage	V_{IN} = 22V		0.1		µA

Copyright © 2007–2013, Texas Instruments Incorporated

TYPICAL PERFORMANCE CHARACTERISTICS

Unless otherwise specified, V_{IN} = 12V, V_{BOOST} - V_{SW} = 5V and T_A = 25°C.

Efficiency vs LED Current (V_{IN}=5V)

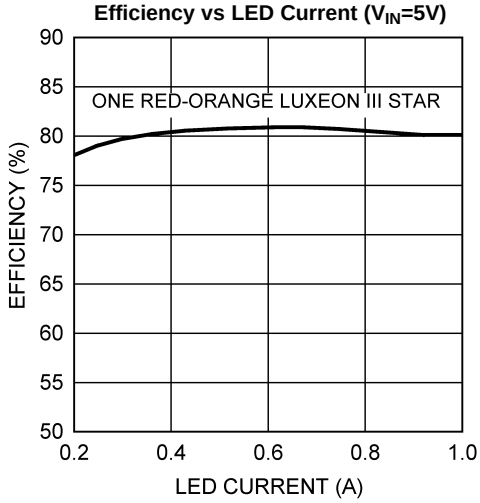

Figure 3.

Efficiency vs Input Voltage (I_F = 1A)

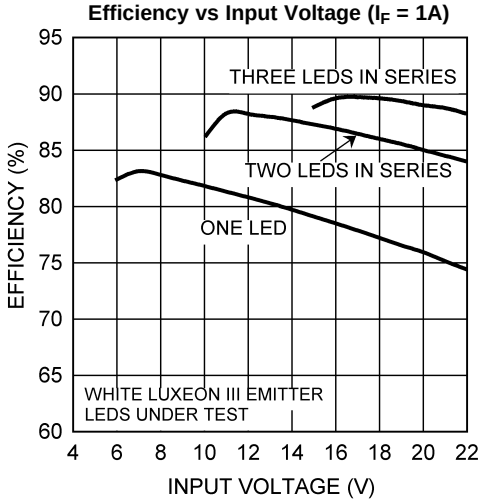

Figure 4.

Efficiency vs Input Voltage (I_F = 0.7A)

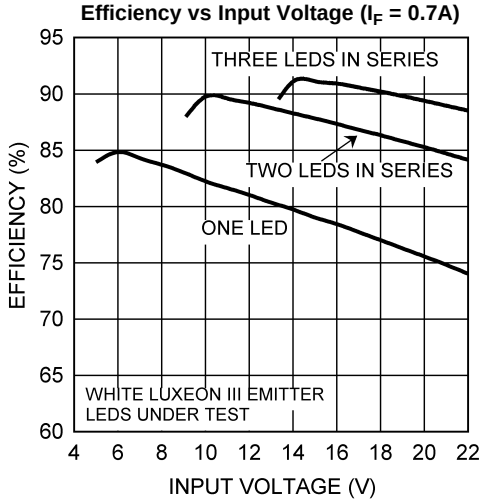

Figure 5.

Efficiency vs Input Voltage (I_F = 0.35A)

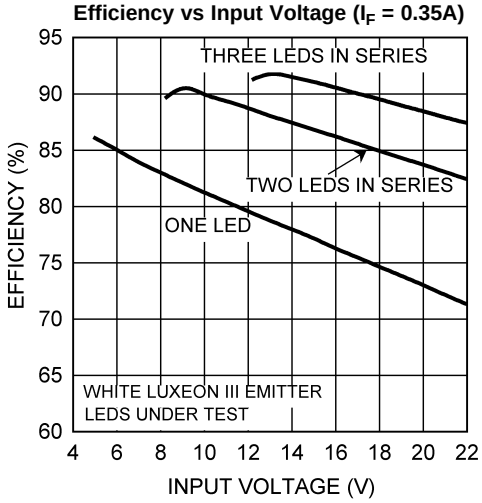

Figure 6.

TYPICAL PERFORMANCE CHARACTERISTICS (continued)

Unless otherwise specified, V_{IN} = 12V, V_{BOOST} - V_{SW} = 5V and T_A = 25°C.

V_{FB} vs Temperature

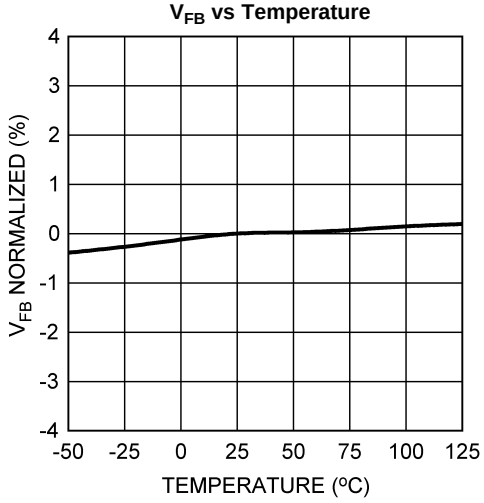

Figure 7.

Oscillator Frequency vs Temperature

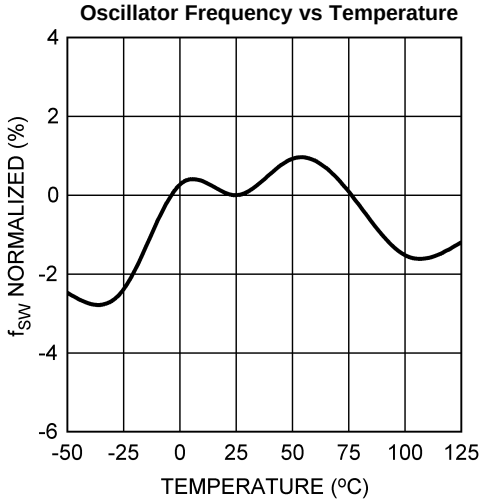

Figure 8.

Current Limit vs Temperature

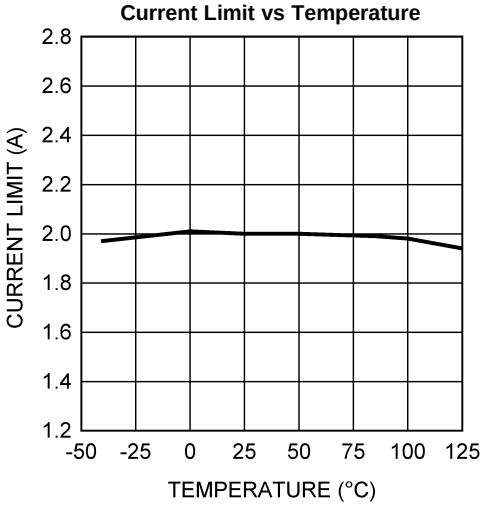

Figure 9.

SOT $R_{DS(ON)}$ vs Temperature (V_{BOOST} - V_{SW} = 3V)

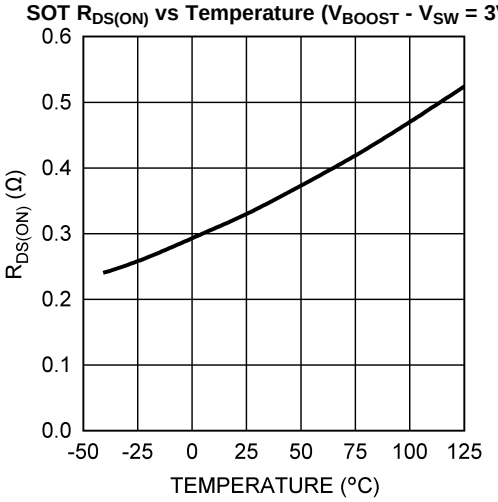

Figure 10.

Quiescent Current vs Temperature

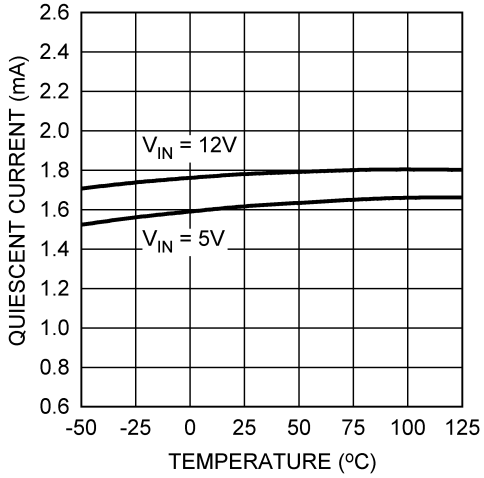

Figure 11.

Startup Response to EN/DIM Signal (V_{IN} = 15V, I_F = 0.2A)

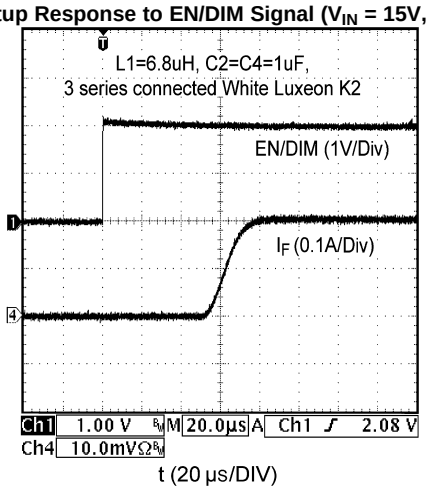

Figure 12.

Copyright © 2007–2013, Texas Instruments Incorporated

BLOCK DIAGRAM

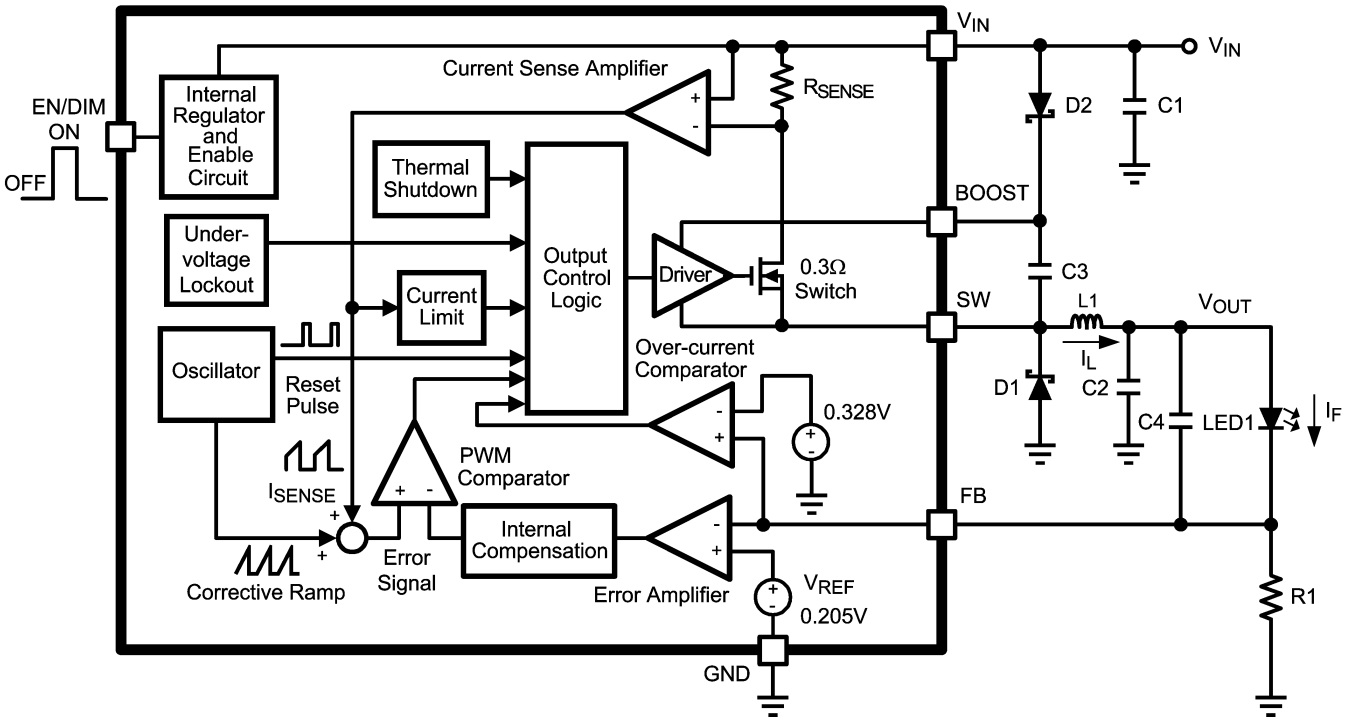

Figure 13. Simplified Block Diagram

APPLICATION INFORMATION

THEORY OF OPERATION

The LM3405A is a PWM, current-mode controled buck switching regulator designed to provide a simple, high efficiency solution for driving LEDs with a preset switching frequency of 1.6MHz. This high frequency allows the LM3405A to operate with small surface mount capacitors and inductors, resulting in LED drivers that need only a minimum amount of board space. The LM3405A is internally compensated, simple to use, and requires few external components.

The following description of operation of the LM3405A will refer to the Simplified Block Diagram (Figure 13) and to the waveforms in Figure 14. The LM3405A supplies a regulated output current by switching the internal NMOS power switch at constant frequency and variable duty cycle. A switching cycle begins at the falling edge of the reset pulse generated by the internal oscillator. When this pulse goes low, the output control logic turns on the internal NMOS power switch. During this on-time, the SW pin voltage (V_{SW}) swings up to approximately V_{IN}, and the inductor current (I_L) increases with a linear slope. I_L is measured by the current sense amplifier, which generates an output proportional to the switch current. The sense signal is summed with the regulator's corrective ramp and compared to the error amplifier's output, which is proportional to the difference between the feedback voltage and V_{REF}. When the PWM comparator output goes high, the internal power switch turns off until the next switching cycle begins. During the switch off-time, inductor current discharges through the catch diode D1, which forces the SW pin to swing below ground by the forward voltage (V_{D1}) of the catch diode. The regulator loop adjusts the duty cycle (D) to maintain a constant output current (I_F) through the LED, by forcing FB pin voltage to be equal to V_{REF} (0.205V).

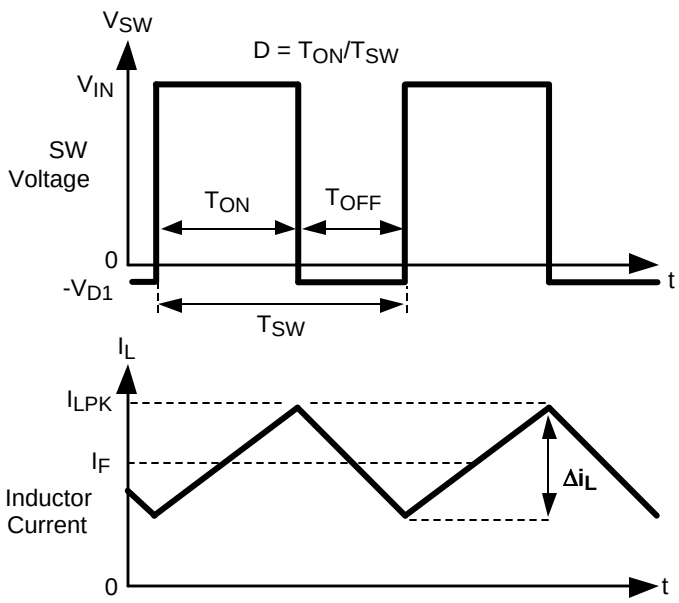

Figure 14. SW Pin Voltage and Inductor Current Waveforms of LM3405A

Copyright © 2007–2013, Texas Instruments Incorporated

BOOST FUNCTION

Capacitor C3 and diode D2 in Figure 13 are used to generate a voltage V_{BOOST}. The voltage across C3, V_{BOOST} - V_{SW}, is the gate drive voltage to the internal NMOS power switch. To properly drive the internal NMOS switch during its on-time, V_{BOOST} needs to be at least 2.5V greater than V_{SW}. A large value of V_{BOOST} - V_{SW} is recommended to achieve better efficiency by minimizing both the internal switch ON resistance ($R_{DS(ON)}$), and the switch rise and fall times. However, V_{BOOST} - V_{SW} should not exceed the maximum operating limit of 5.5V.

When the LM3405A starts up, internal circuitry from V_{IN} supplies a 20mA current to the BOOST pin, flowing out of the BOOST pin into C3. This current charges C3 to a voltage sufficient to turn the switch on. The BOOST pin will continue to source current to C3 until the voltage at the feedback pin is greater than 123mV.

There are various methods to derive V_{BOOST}:

1. From the input voltage (V_{IN})
2. From the output voltage (V_{OUT})
3. From a shunt or series zener diode
4. From an external distributed voltage rail (V_{EXT})

The first method is shown in the Simplified Block Diagram of Figure 13. Capacitor C3 is charged via diode D2 by V_{IN}. During a normal switching cycle, when the internal NMOS power switch is off (T_{OFF}) (refer to Figure 14), V_{BOOST} equals V_{IN} minus the forward voltage of D2 (V_{D2}), during which the current in the inductor (L1) forward biases the catch diode D1 (V_{D1}). Therefore the gate drive voltage stored across C3 is:

$$V_{BOOST} - V_{SW} = V_{IN} - V_{D2} + V_{D1} \quad (1)$$

When the NMOS switch turns on (T_{ON}), the switch pin rises to:

$$V_{SW} = V_{IN} – (R_{DS(ON)} \times I_L) \quad (2)$$

Since the voltage across C3 remains unchanged, V_{BOOST} is forced to rise thus reverse biasing D2. The voltage at V_{BOOST} is then:

$$V_{BOOST} = 2V_{IN} – (R_{DS(ON)} \times I_L) – V_{D2} + V_{D1} \quad (3)$$

Depending on the quality of the diodes D1 and D2, the gate drive voltage in this method can be slightly less or larger than the input voltage V_{IN}. For best performance, ensure that the variation of the input supply does not cause the gate drive voltage to fall outside the recommended range:

$$2.5V < V_{IN} - V_{D2} + V_{D1} < 5.5V \quad (4)$$

The second method for deriving the boost voltage is to connect D2 to the output as shown in Figure 15. The gate drive voltage in this configuration is:

$$V_{BOOST} - V_{SW} = V_{OUT} – V_{D2} + V_{D1} \quad (5)$$

Since the gate drive voltage needs to be in the range of 2.5V to 5.5V, the output voltage V_{OUT} should be limited to a certain range. For the calculation of V_{OUT}, see OUTPUT VOLTAGE section.

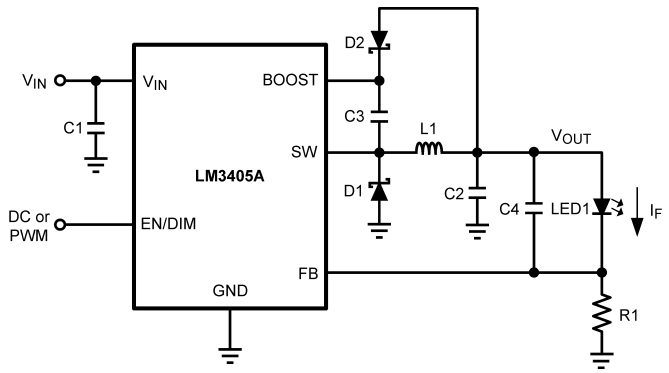

Figure 15. V_{BOOST} Derived from V_{OUT}

The third method can be used in the applications where both V_{IN} and V_{OUT} are greater than 5.5V. In these cases, C3 cannot be charged directly from these voltages; instead C3 can be charged from V_{IN} or V_{OUT} minus a zener voltage (V_{D3}) by placing a zener diode D3 in series with D2 as shown in Figure 16. When using a series zener diode from the input, the gate drive voltage is V_{IN} - V_{D3} - V_{D2} + V_{D1}.

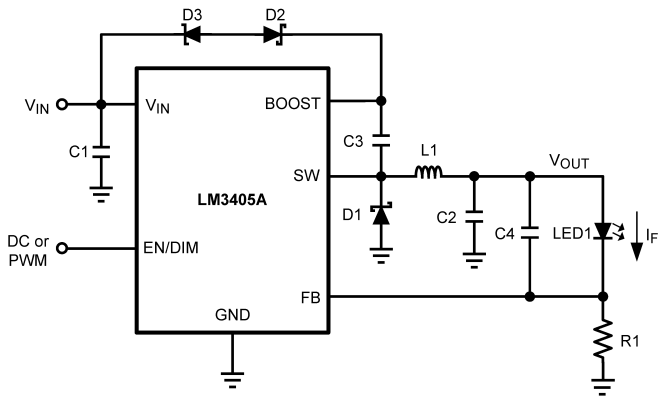

Figure 16. V_{BOOST} Derived from V_{IN} through a Series Zener

An alternate method is to place the zener diode D3 in a shunt configuration as shown in Figure 17. A small 350mW to 500mW, 5.1V zener in a SOT or SOD package can be used for this purpose. A small ceramic capacitor such as a 6.3V, 0.1µF capacitor (C5) should be placed in parallel with the zener diode. When the internal NMOS switch turns on, a pulse of current is drawn to charge the internal NMOS gate capacitance. The 0.1µF parallel shunt capacitor ensures that the V_{BOOST} voltage is maintained during this time. Resistor R2 should be chosen to provide enough RMS current to the zener diode and to the BOOST pin. A recommended choice for the zener current (I_{ZENER}) is 1mA. The current I_{BOOST} into the BOOST pin supplies the gate current of the NMOS power switch. It reaches a maximum of around 3.6mA at the highest gate drive voltage of 5.5V over the LM3405A operating range.

For the worst case I_{BOOST}, increase the current by 50%. In that case, the maximum boost current will be:

$$I_{BOOST\text{-}MAX} = 1.5 \times 3.6mA = 5.4mA \quad (6)$$

R2 will then be given by:

$$R2 = (V_{IN} - V_{ZENER}) / (I_{BOOST_MAX} + I_{ZENER}) \quad (7)$$

For example, let V_{IN} = 12V, V_{ZENER} = 5V, I_{ZENER} = 1mA, then:

$$R2 = (12V - 5V) / (5.4mA + 1mA) = 1.09k\Omega \quad (8)$$

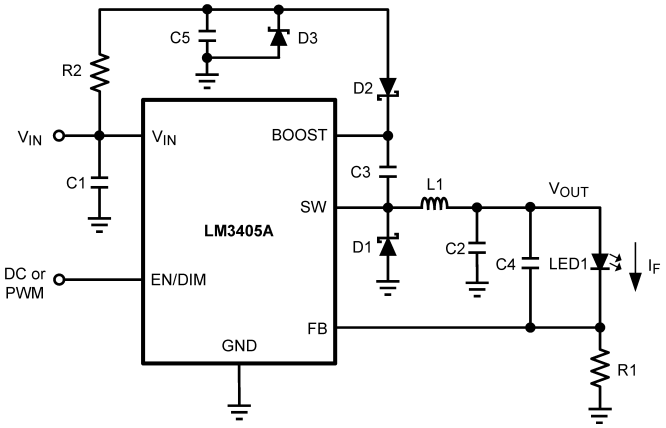

Figure 17. V_{BOOST} derived from V_{IN} through a Shunt Zener

The fourth method can be used in an application which has an external low voltage rail, V_{EXT}. C3 can be charged through D2 from V_{EXT}, independent of V_{IN} and V_{OUT} voltage levels. Again for best performance, ensure that the gate drive voltage, V_{EXT} - V_{D2} + V_{D1}, falls in the range of 2.5V to 5.5V.

Copyright © 2007–2013, Texas Instruments Incorporated

SETTING THE LED CURRENT

LM3405A is a constant current buck regulator. The LEDs are connected between V_{OUT} and the FB pin as shown in the Typical Application Circuit. The FB pin is at 0.205V in regulation and therefore the LED current I_F is set by V_{FB} and resistor R1 from FB to ground by the following equation:

$$I_F = V_{FB} / R1 \quad (9)$$

I_F should not exceed the 1A current capability of LM3405A and therefore R1 minimum must be approximately 0.2Ω. I_F should also be kept above 200mA for stable operation, and therefore R1 maximum must be approximately 1Ω. If average LED currents less than 200mA are desired, the EN/DIM pin can be used for PWM dimming. See LED PWM DIMMING section.

OUTPUT VOLTAGE

The output voltage is primarily determined by the number of LEDs (n) connected from V_{OUT} to FB pin and therefore V_{OUT} can be written as :

$$V_{OUT} = ((n \times V_F) + V_{FB}) \quad (10)$$

where V_F is the forward voltage of one LED at the set LED current level (see LED manufacturer datasheet for forward characteristics curve).

ENABLE MODE / SHUTDOWN MODE

The LM3405A has both enable and shutdown modes that are controlled by the EN/DIM pin. Connecting a voltage source greater than 1.8V to the EN/DIM pin enables the operation of LM3405A, while reducing this voltage below 0.4V places the part in a low quiescent current (0.3µA typical) shutdown mode. There is no internal pull-up on EN/DIM pin, therefore an external signal is required to initiate switching. Do not allow this pin to float or rise to 0.3V above V_{IN}. It should be noted that when the EN/DIM pin voltage rises above 1.8V while the input voltage is greater than UVLO, there is a finite delay before switching starts. During this delay the LM3405A will go through a power on reset state after which the internal soft-start process commences. The soft-start process limits the inrush current and brings up the LED current (I_F) in a smooth and controlled fashion. The total combined duration of the power on reset delay, soft-start delay and the delay to fully establish the LED current is in the order of 100µs (refer to Figure 22).

The simplest way to enable the operation of LM3405A is to connect the EN/DIM pin to V_{IN} which allows self start-up of LM3405A whenever the input voltage is applied. However, when an input voltage of slow rise time is used to power the application and if both the input voltage and the output voltage are not fully established before the soft-start time elapses, the control circuit will command maximum duty cycle operation of the internal power switch to bring up the output voltage rapidly. When the feedback pin voltage exceeds 0.205V, the duty cycle will have to reduce from the maximum value accordingly, to maintain regulation. It takes a finite amount of time for this reduction of duty cycle and this will result in a spike in LED current for a short duration as shown in Figure 18. In applications where this LED current overshoot is undesirable, EN/DIM pin voltage can be separately applied and delayed such that V_{IN} is fully established before the EN/DIM pin voltage reaches the enable threshold. The effect of delaying EN/DIM with respect to V_{IN} on the LED current is shown in Figure 19. For a fast rising input voltage (200µs for example), there is no need to delay the EN/DIM signal since soft-start can smoothly bring up the LED current as shown in Figure 20.

Copyright © 2007–2013, Texas Instruments Incorporated

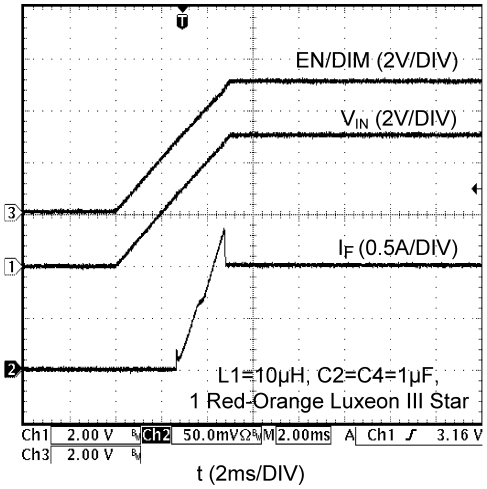

Figure 18. Startup Response to V_{IN} with 5ms Rise Time

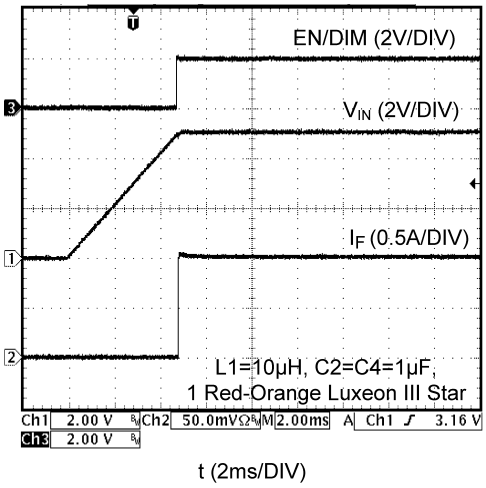

Figure 19. Startup Response to V_{IN} with EN/DIM Delayed

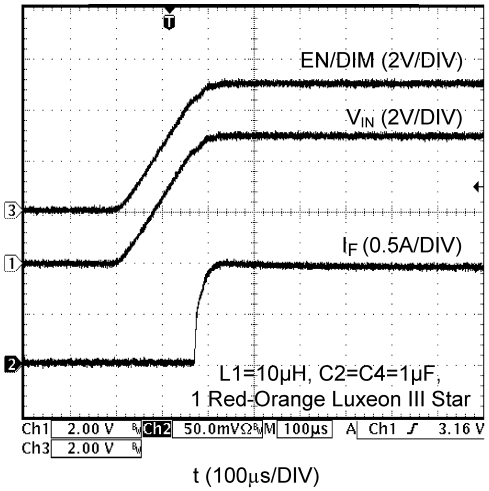

Figure 20. Startup Response to V_{IN} with 200µs Rise Time

LED PWM DIMMING

The LED brightness can be controlled by applying a periodic pulse signal to the EN/DIM pin and varying its frequency and/or duty cycle. This so-called PWM dimming method controls the average light output by pulsing the LED current between the set value and zero. A logic high level at the EN/DIM pin turns on the LED current whereas a logic low level turns off the LED current. Figure 21 shows a typical LED current waveform in PWM dimming mode. As explained in the previous section, there is approximately a 100µs delay from the EN/DIM signal going high to fully establishing the LED current as shown in Figure 22. This 100µs delay sets a maximum frequency limit for the driving signal that can be applied to the EN/DIM pin for PWM dimming. Figure 23 shows the average LED current versus duty cycle of PWM dimming signal for various frequencies. The applicable frequency range to drive LM3405A for PWM dimming is from 100Hz to 5kHz. The dimming ratio reduces drastically when the applied PWM dimming frequency is greater than 5kHz.

Copyright © 2007–2013, Texas Instruments Incorporated

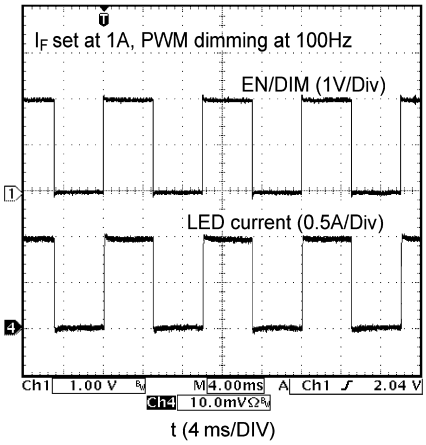

Figure 21. PWM Dimming of LEDs Using the EN/DIM Pin

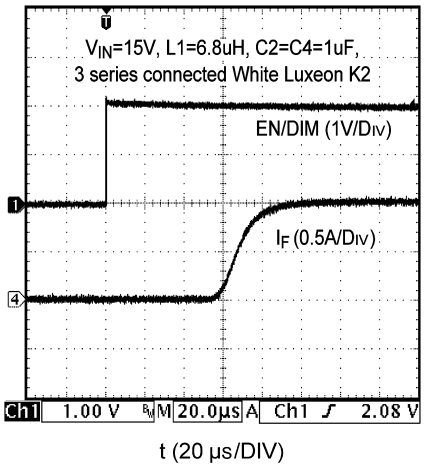

Figure 22. Startup Response to EN/DIM with I_F = 1A

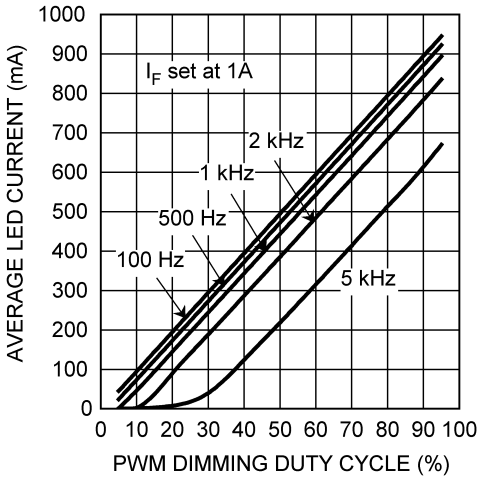

Figure 23. Average LED Current vs Duty Cycle of PWM Dimming Signal at EN/DIM Pin

UNDER-VOLTAGE LOCKOUT

Under-voltage lockout (UVLO) prevents the LM3405A from operating until the input voltage exceeds 2.74V (typical). The UVLO threshold has approximately 440mV of hysteresis, so the part will operate until V_{IN} drops below 2.3V (typical). Hysteresis prevents the part from turning off during power up if V_{IN} is non-monotonic.

CURRENT LIMIT

The LM3405A uses cycle-by-cycle current limit to protect the internal power switch. During each switching cycle, a current limit comparator detects if the power switch current exceeds 2.0A (typical), and turns off the switch until the next switching cycle begins.

OVER-CURRENT PROTECTION

The LM3405A has a built in over-current comparator that compares the FB pin voltage to a threshold voltage that is 60% higher than the internal reference V_{REF}. Once the FB pin voltage exceeds this threshold level (typically 328mV), the internal NMOS power switch is turned off, which allows the feedback voltage to decrease towards regulation. This threshold provides an upper limit for the LED current. LED current overshoot is limited to 328mV/R1 by this comparator during transients.

Copyright © 2007–2013, Texas Instruments Incorporated

THERMAL SHUTDOWN

Thermal shutdown limits total power dissipation by turning off the internal power switch when the IC junction temperature exceeds 165°C. After thermal shutdown occurs, the power switch does not turn on until the junction temperature drops below approximately 150°C.

DESIGN GUIDE

INDUCTOR (L1)

The Duty Cycle (D) can be approximated quickly using the ratio of output voltage (V_{OUT}) to input voltage (V_{IN}):

$$D = \frac{V_{OUT}}{V_{IN}} \tag{11}$$

The catch diode (D1) forward voltage drop and the voltage drop across the internal NMOS must be included to calculate a more accurate duty cycle. Calculate D by using the following formula:

$$D = \frac{V_{OUT} + V_{D1}}{V_{IN} + V_{D1} - V_{SW}} \tag{12}$$

V_{SW} can be approximated by:

$$V_{SW} = I_F \times R_{DS(ON)} \tag{13}$$

The diode forward drop (V_{D1}) can range from 0.3V to 0.7V depending on the quality of the diode. The lower V_{D1} is, the higher the operating efficiency of the converter.

The inductor value determines the output ripple current (Δi_L, as defined in Figure 14). Lower inductor values decrease the size of the inductor, but increases the output ripple current. An increase in the inductor value will decrease the output ripple current. The ratio of ripple current to LED current is optimized when it is set between 0.3 and 0.4 at 1A LED current. This ratio r is defined as:

$$r = \frac{\Delta i_L}{I_F} \tag{14}$$

One must also ensure that the minimum current limit (1.2A) is not exceeded, so the peak current in the inductor must be calculated. The peak current (I_{LPK}) in the inductor is calculated as:

$$I_{LPK} = I_F + \Delta i_L/2 \tag{15}$$

When the designed maximum output current is reduced, the ratio r can be increased. At a current of 0.2A, r can be made as high as 0.7. The ripple ratio can be increased at lighter loads because the net ripple is actually quite low, and if r remains constant the inductor value can be made quite large. An equation empirically developed for the maximum ripple ratio at any current below 2A is:

$$r = 0.387 \times I_{OUT}^{-0.3667} \tag{16}$$

Note that this is just a guideline.

The LM3405A operates at a high frequency allowing the use of ceramic output capacitors without compromising transient response. Ceramic capacitors allow higher inductor ripple without significantly increasing LED current ripple. See the output capacitor and feed-forward capacitor sections for more details on LED current ripple.

Now that the ripple current or ripple ratio is determined, the inductance is calculated by:

$$L = \frac{V_{OUT} + V_{D1}}{I_F \times r \times f_{SW}} \times (1-D) \tag{17}$$

where f_{SW} is the switching frequency and I_F is the LED current. When selecting an inductor, make sure that it is capable of supporting the peak output current without saturating. Inductor saturation will result in a sudden reduction in inductance and prevent the regulator from operating correctly. Because of the operating frequency of the LM3405A, ferrite based inductors are preferred to minimize core losses. This presents little restriction since the variety of ferrite based inductors is huge. Lastly, inductors with lower series resistance (DCR) will provide better operating efficiency. For recommended inductor selection, refer to Circuit Examples and Recommended Inductance Range in Table 1.

Copyright © 2007–2013, Texas Instruments Incorporated

Table 1. Recommended Inductance Range

I_F	Inductance Range and Inductor Current Ripple			
1.0A	**6.8µH-15µH**			
	Inductance	6.8µH	10µH	15µH
	$\Delta i_L / I_F$ (1)	51%	36%	24%
0.6A	**10µH-22µH**			
	Inductance	10µH	15µH	22µH
	$\Delta i_L / I_F$ (1)	58%	39%	26%
0.2A	**15µH-27µH**			
	Inductance	15µH	22µH	27µH
	$\Delta i_L / I_F$ (1)	116%	79%	65%

(1) Maximum over full range of V_{IN} and V_{OUT}.

INPUT CAPACITOR (C1)

An input capacitor is necessary to ensure that V_{IN} does not drop excessively during switching transients. The primary specifications of the input capacitor are capacitance, voltage rating, RMS current rating, and ESL (Equivalent Series Inductance). The input voltage rating is specifically stated by the capacitor manufacturer. Make sure to check any recommended deratings and also verify if there is any significant change in capacitance at the operating input voltage and the operating temperature. The input capacitor maximum RMS input current rating ($I_{RMS\text{-}IN}$) must be greater than:

$$I_{RMS\text{-}IN} = I_F \times \sqrt{D \times \left(1 - D + \frac{r^2}{12}\right)} \tag{18}$$

It can be shown from the above equation that maximum RMS capacitor current occurs when D = 0.5. Always calculate the RMS at the point where the duty cycle D, is closest to 0.5. The ESL of an input capacitor is usually determined by the effective cross sectional area of the current path. A large leaded capacitor will have high ESL and an 0805 ceramic chip capacitor will have very low ESL. At the operating frequency of the LM3405A, certain capacitors may have an ESL so large that the resulting inductive impedance (2πfL) will be higher than that required to provide stable operation. It is strongly recommended to use ceramic capacitors due to their low ESR and low ESL. A 10µF multilayer ceramic capacitor (MLCC) is a good choice for most applications. In cases where large capacitance is required, use surface mount capacitors such as Tantalum capacitors and place at least a 1µF ceramic capacitor close to the V_{IN} pin. For MLCCs it is recommended to use X7R or X5R dielectrics. Consult capacitor manufacturer datasheet to see how rated capacitance varies over operating conditions.

OUTPUT CAPACITOR (C2)

The output capacitor is selected based upon the desired reduction in LED current ripple. A 1µF ceramic capacitor results in very low LED current ripple for most applications. Due to the high switching frequency, the 1µF capacitor alone (without feed-forward capacitor C4) can filter more than 90% of the inductor current ripple for most applications where the sum of LED dynamic resistance and R1 is larger than 1Ω. Since the internal compensation is tailored for small output capacitance with very low ESR, it is strongly recommended to use a ceramic capacitor with capacitance less than 3.3µF.

Given the availability and quality of MLCCs and the expected output voltage of designs using the LM3405A, there is really no need to review other capacitor technologies. A benefit of ceramic capacitors is their ability to bypass high frequency noise. A certain amount of switching edge noise will couple through the parasitic capacitances in the inductor to the output. A ceramic capacitor will bypass this noise. In cases where large capacitance is required, use Electrolytic or Tantalum capacitors with large ESR, and verify the loop performance on the bench. Like the input capacitor, multilayer ceramic capacitors are recommended X7R or X5R. Again, verify actual capacitance at the desired operating voltage and temperature.

Check the RMS current rating of the capacitor. The maximum RMS current rating of the capacitor is:

$$I_{RMS\text{-}OUT} = I_F \times \frac{r}{\sqrt{12}} \tag{19}$$

One may select a 1206 size ceramic capacitor for C2 since its current rating is typically higher than 1A, more than enough for the requirement.

FEED-FORWARD CAPACITOR (C4)

The feed-forward capacitor (designated as C4) connected in parallel with the LED string is required to provide multiple benefits to the LED driver design. It greatly improves the large signal transient response and suppresses LED current overshoot that may otherwise occur during PWM dimming; it also helps to shape the rise and fall times of the LED current pulse during PWM dimming thus reducing EMI emission; it reduces LED current ripple by bypassing some of inductor ripple from flowing through the LED. For most applications, a 1µF ceramic capacitor is sufficient. In fact, the combination of a 1µF feed-forward ceramic capacitor and a 1µF output ceramic capacitor leads to less than 1% current ripple flowing through the LED. Lower and higher C4 values can be used, but bench validation is required to ensure the performance meets the application requirement.

Figure 24 shows a typical LED current waveform during PWM dimming without feed-forward capacitor. At the beginning of each PWM cycle, overshoot can be seen in the LED current. Adding a 1µF feed-forward capacitor can totally remove the overshoot as shown in Figure 25.

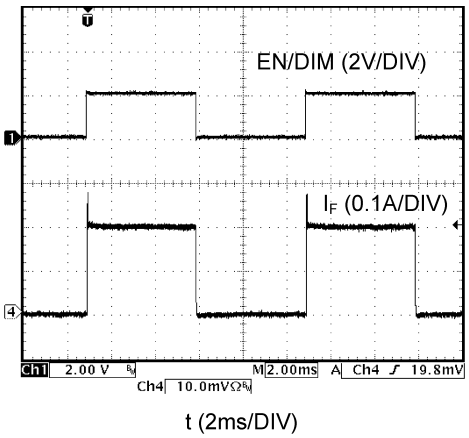

Figure 24. PWM Dimming without Feed-Forward Capacitor

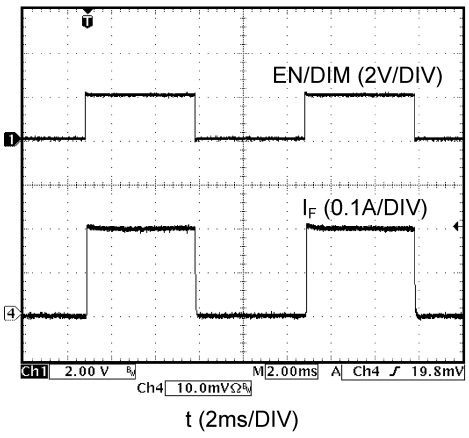

Figure 25. PWM Dimming with a 1µF Feed-Forward Capacitor

CATCH DIODE (D1)

The catch diode (D1) conducts during the switch off-time. A Schottky diode is required for its fast switching time and low forward voltage drop. The catch diode should be chosen such that its current rating is greater than:

$$I_{D1} = I_F \times (1-D) \tag{20}$$

The reverse breakdown rating of the diode must be at least the maximum input voltage plus appropriate margin. To improve efficiency, choose a Schottky diode with a low forward voltage drop.

BOOST DIODE (D2)

A standard diode such as the 1N4148 type is recommended. For V_{BOOST} circuits derived from voltages less than 3.3V, a small-signal Schottky diode is recommended for better efficiency. A good choice is the BAT54 small signal diode.

BOOST CAPACITOR (C3)

A 0.01µF ceramic capacitor with a voltage rating of at least 6.3V is sufficient. The X7R and X5R MLCCs provide the best performance.

POWER LOSS ESTIMATION

The main power loss in LM3405A includes three basic types of loss in the internal power switch: conduction loss, switching loss, and gate charge loss. In addition, there is loss associated with the power required for the internal circuitry of IC.

The conduction loss is calculated as:

$$P_{COND} = (I_F^2 \times D) \times \left(1 + \frac{1}{3} \times \left(\frac{\Delta i_L}{I_F}\right)^2\right) \times R_{DS(ON)} \tag{21}$$

Copyright © 2007–2013, Texas Instruments Incorporated

If the inductor ripple current is fairly small (for example, less than 40%) , the conduction loss can be simplified to:

$$P_{COND} = I_F^2 \times R_{DS(ON)} \times D \quad (22)$$

The switching loss occurs during the switch on and off transition periods, where voltage and current overlap resulting in power loss. The simplest means to determine this loss is to empirically measure the rise and fall times (10% to 90%) of the voltage at the switch pin.

Switching power loss is calculated as follows:

$$P_{SW} = 0.5 \times V_{IN} \times I_F \times f_{SW} \times (T_{RISE} + T_{FALL}) \quad (23)$$

The gate charge loss is associated with the gate charge Q_G required to drive the switch:

$$P_G = f_{SW} \times V_{IN} \times Q_G \quad (24)$$

The power loss required for operation of the internal circuitry:

$$P_Q = I_Q \times V_{IN} \quad (25)$$

I_Q is the quiescent operating current, and is typically around 1.8mA for the LM3405A.

The total power loss in the IC is:

$$P_{INTERNAL} = P_{COND} + P_{SW} + P_G + P_Q \quad (26)$$

An example of power losses for a typical application is shown in Table 2:

Table 2. Power Loss Tabulation

Conditions		Power loss	
V_{IN}	12V		
V_{OUT}	3.9V		
I_{OUT}	1.0A		
V_{D1}	0.45V		
$R_{DS(ON)}$	300mΩ	P_{COND}	108mW
f_{SW}	1.6MHz		
T_{RISE}	18ns	P_{SW}	288mW
T_{FALL}	12ns		
I_Q	1.8mA	P_Q	22mW
Q_G	1.4nC	P_G	27mW
D is calculated to be 0.36			

$$\Sigma (P_{COND} + P_{SW} + P_Q + P_G) = P_{INTERNAL} \quad (27)$$

$$P_{INTERNAL} = 445mW \quad (28)$$

PCB Layout Considerations

When planning the layout there are a few things to consider when trying to achieve a clean, regulated output. The most important consideration when completing the layout is the close coupling of the GND connections of the input capacitor C1 and the catch diode D1. These ground ends should be close to one another and be connected to the GND plane with at least two through-holes. Place these components as close to the IC as possible. The next consideration is the location of the GND connection of the output capacitor C2, which should be near the GND connections of C1 and D1.

There should be a continuous ground plane on the bottom layer of a two-layer board except under the switching node island.

The FB pin is a high impedance node and care should be taken to make the FB trace short to avoid noise pickup that causes inaccurate regulation. The LED current setting resistor R1 should be placed as close as possible to the IC, with the GND of R1 placed as close as possible to the GND of the IC. The V_{OUT} trace to LED anode should be routed away from the inductor and any other traces that are switching.

High AC currents flow through the V_{IN}, SW and V_{OUT} traces, so they should be as short and wide as possible. Radiated noise can be decreased by choosing a shielded inductor.

The remaining components should also be placed as close as possible to the IC. See Application Report AN-1229 (SNVA054) for further considerations and the LM3405A demo board as an example of a four-layer layout.

Copyright © 2007–2013, Texas Instruments Incorporated

LM3405A Circuit Examples

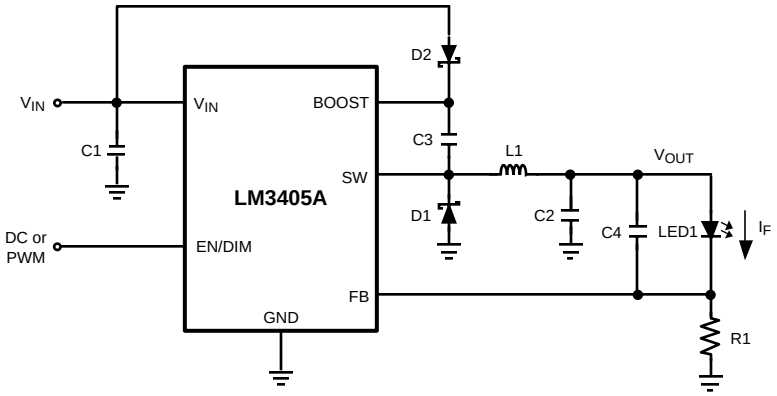

Figure 26. V_{BOOST} derived from V_{IN} (V_{IN} = 5V, I_F = 1A)

Table 3. Bill of Materials for Figure 26

Part ID	Part Value	Part Number	Manufacturer
U1	1A LED Driver	LM3405A	Texas Instruments Semiconductor
C1, Input Cap	10µF, 6.3V, X5R	C3216X5R0J106M	TDK
C2, Output Cap	1µF, 10V, X7R	GRM319R71A105KC01D	Murata
C3, Boost Cap	0.01µF, 16V, X7R	0805YC103KAT2A	AVX
C4, Feedforward Cap	1µF, 10V, X7R	GRM319R71A105KC01D	Murata
D1, Catch Diode	Schottky, 0.37V at 1A, V_R = 10V	MBRM110LT1G	ON Semiconductor
D2, Boost Diode	Schottky, 0.36V at 15mA	CMDSH-3	Central Semiconductor
L1	4.7µH, 1.6A	SLF6028T-4R7M1R6	TDK
R1	0.2Ω, 0.5W, 1%	WSL2010R2000FEA	Vishay
LED1	1.5A, White LED	LXK2-PW14	Lumileds

Copyright © 2007–2013, Texas Instruments Incorporated

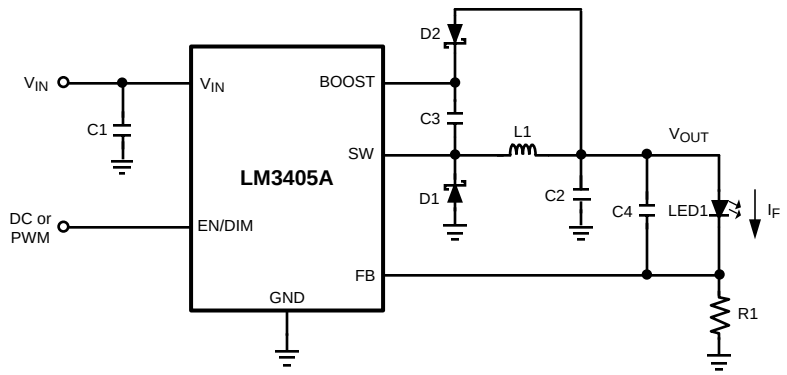

Figure 27. V_{BOOST} derived from V_{OUT} (V_{IN} = 12V, I_F = 1A)

Table 4. Bill of Materials for Figure 27

Part ID	Part Value	Part Number	Manufacturer
U1	1A LED Driver	LM3405A	Texas Instruments
C1, Input Cap	10µF, 25V, X5R	ECJ-3YB1E106K	Panasonic
C2, Output Cap	1µF, 10V, X7R	GRM319R71A105KC01D	Murata
C3, Boost Cap	0.01µF, 16V, X7R	0805YC103KAT2A	AVX
C4, Feedforward Cap	1µF, 10V, X7R	GRM319R71A105KC01D	Murata
D1, Catch Diode	Schottky, 0.5V at 1A, V_R = 30V	SS13	Vishay
D2, Boost Diode	Schottky, 0.36V at 15mA	CMDSH-3	Central Semiconductor
L1	4.7µH, 1.6A	SLF6028T-4R7M1R6	TDK
R1	0.2Ω, 0.5W, 1%	WSL2010R2000FEA	Vishay
LED1	1.5A, White LED	LXK2-PW14	Lumileds

Copyright © 2007–2013, Texas Instruments Incorporated

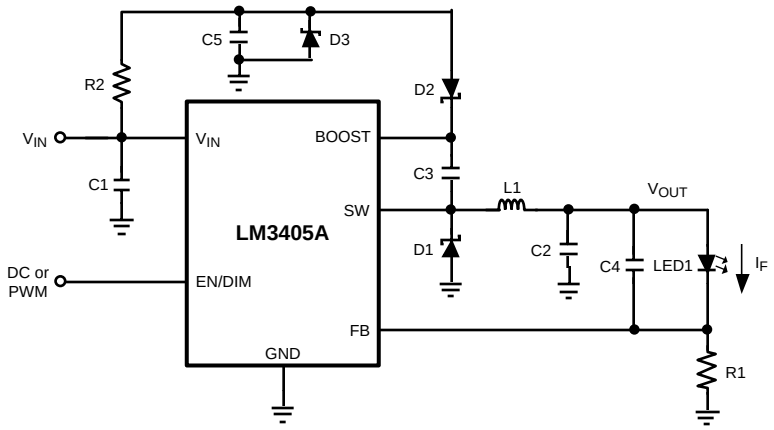

Figure 28. V_{BOOST} derived from V_{IN} through a Shunt Zener Diode (D3) (V_{IN} = 18V, I_F = 1A)

Table 5. Bill of Materials for Figure 28

Part ID	Part Value	Part Number	Manufacturer
U1	1A LED Driver	LM3405A	Texas Instruments Semiconductor
C1, Input Cap	10µF, 25V, X5R	ECJ-3YB1E106K	Panasonic
C2, Output Cap	1µF, 10V, X7R	GRM319R71A105KC01D	Murata
C3, Boost Cap	0.01µF, 16V, X7R	0805YC103KAT2A	AVX
C4, Feedforward Cap	1µF, 10V, X7R	GRM319R71A105KC01D	Murata
C5, Shunt Cap	0.1µF, 16V, X7R	GRM219R71C104KA01D	Murata
D1, Catch Diode	Schottky, 0.5V at 1A, V_R = 30V	SS13	Vishay
D2, Boost Diode	Schottky, 0.36V at 15mA	CMDSH-3	Central Semiconductor
D3, Zener Diode	4.7V, 350mW, SOT-23	BZX84C4V7	Fairchild
L1	6.8µH, 1.5A	SLF6028T-6R8M1R5	TDK
R1	0.2Ω, 0.5W, 1%	WSL2010R2000FEA	Vishay
R2	1.91kΩ, 1%	CRCW08051K91FKEA	Vishay
LED1	1.5A, White LED	LXK2-PW14	Lumileds

Copyright © 2007–2013, Texas Instruments Incorporated

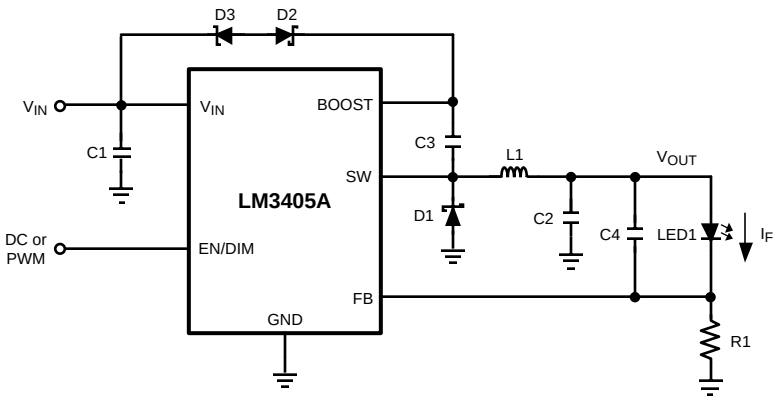

Figure 29. V_{BOOST} derived from V_{IN} through a Series Zener Diode (D3) (V_{IN} = 15V, I_F = 1A)

Table 6. Bill of Materials for Figure 29

Part ID	Part Value	Part Number	Manufacturer
U1	1A LED Driver	LM3405A	Texas Instruments
C1, Input Cap	10µF, 25V, X5R	ECJ-3YB1E106K	Panasonic
C2, Output Cap	1µF, 10V, X7R	GRM319R71A105KC01D	Murata
C3, Boost Cap	0.01µF, 16V, X7R	0805YC103KAT2A	AVX
C4, Feedforward Cap	1µF, 10V, X7R	GRM319R71A105KC01D	Murata
D1, Catch Diode	Schottky, 0.5V at 1A, V_R = 30V	SS13	Vishay
D2, Boost Diode	Schottky, 0.36V at 15mA	CMDSH-3	Central Semiconductor
D3, Zener Diode	11V, 350mW, SOT-23	BZX84C11	Fairchild
L1	6.8µH, 1.5A	SLF6028T-6R8M1R5	TDK
R1	0.2Ω, 0.5W, 1%	WSL2010R2000FEA	Vishay
LED1	1.5A, White LED	LXK2-PW14	Lumileds

Copyright © 2007–2013, Texas Instruments Incorporated

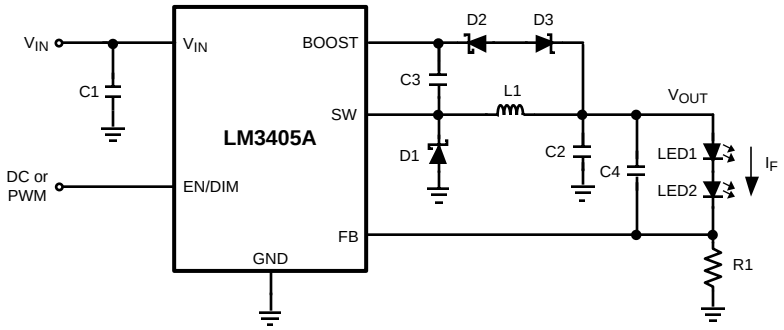

Figure 30. V_{BOOST} derived from V_{OUT} through a Series Zener Diode (D3) (V_{IN} = 18V, I_F = 1A)

Table 7. Bill of Materials for Figure 30

Part ID	Part Value	Part Number	Manufacturer
U1	1A LED Driver	LM3405A	Texas Instruments
C1, Input Cap	10µF, 25V, X5R	ECJ-3YB1E106K	Panasonic
C2, Output Cap	1µF, 16V, X7R	GRM319R71A105KC01D	Murata
C3, Boost Cap	0.01µF, 16V, X7R	0805YC103KAT2A	AVX
C4, Feedforward Cap	1µF, 16V, X7R	GRM319R71A105KC01D	Murata
D1, Catch Diode	Schottky, 0.5V at 1A, V_R = 30V	SS13	Vishay
D2, Boost Diode	Schottky, 0.36V at 15mA	CMDSH-3	Central Semiconductor
D3, Zener Diode	3.6V, 350mW, SOT-23	BZX84C3V6	Fairchild
L1	6.8µH, 1.5A	SLF6028T-6R8M1R5	TDK
R1	0.2Ω, 0.5W, 1%	WSL2010R2000FEA	Vishay
LED1	1.5A, White LED	LXK2-PW14	Lumileds
LED2	1.5A, White LED	LXK2-PW14	Lumileds

Copyright © 2007–2013, Texas Instruments Incorporated

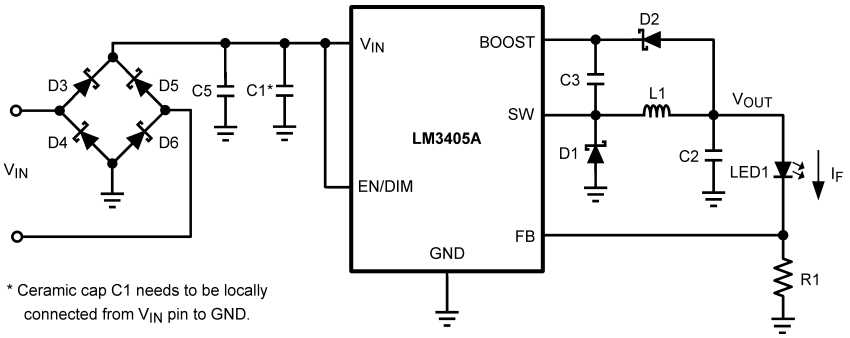

Figure 31. LED MR16 Lamp Application (V_{IN} = 12V AC, I_F = 0.75A)

Table 8. Bill of Materials for Figure 31

Part ID	Part Value	Part Number	Manufacturer
U1	1A LED Driver	LM3405A	Texas Instruments
C1, Input Cap	10µF, 25V, X5R	ECJ-3YB1E106K	Panasonic
C2, Output Cap	1µF, 10V, X7R	GRM319R71A105KC01D	Murata
C3, Boost Cap	0.01µF, 16V, X7R	0805YC103KAT2A	AVX
C5, Input Cap	220µF, 25V, electrolytic	ECE-A1EN221U	Panasonic
D1, Catch Diode	Schottky, 0.5V at 1A, V_R = 30V	SS13	Vishay
D2, Boost Diode	Schottky, 0.36V at 15mA	CMDSH-3	Central Semiconductor
D3, Rectifier Diode	Schottky, 0.385V at 500mA	CMHSH5-2L	Central Semiconductor
D4, Rectifier Diode	Schottky, 0.385V at 500mA	CMHSH5-2L	Central Semiconductor
D5, Rectifier Diode	Schottky, 0.385V at 500mA	CMHSH5-2L	Central Semiconductor
D6, Rectifier Diode	Schottky, 0.385V at 500mA	CMHSH5-2L	Central Semiconductor
L1	6.8µH, 1.5A	SLF6028T-6R8M1R5	TDK
R1	0.27Ω, 0.33W, 1%	ERJ8BQFR27	Panasonic
LED1	1A, White LED	LXHL-PW09	Lumileds

Copyright © 2007–2013, Texas Instruments Incorporated

REVISION HISTORY

Changes from Revision B (May 2013) to Revision C	Page
• Changed layout of National Data Sheet to TI format	23

Copyright © 2007–2013, Texas Instruments Incorporated

PACKAGING INFORMATION

Orderable Device	Status (1)	Package Type	Package Drawing	Pins	Package Qty	Eco Plan (2)	Lead/Ball Finish	MSL Peak Temp (3)	Op Temp (°C)	Top-Side Markings (4)	Samples
LM3405AXMK/NOPB	ACTIVE	SOT	DDC	6	1000	Green (RoHS & no Sb/Br)	CU SN	Level-1-260C-UNLIM	-40 to 125	SSEB	Samples
LM3405AXMKE/NOPB	ACTIVE	SOT	DDC	6	250	Green (RoHS & no Sb/Br)	CU SN	Level-1-260C-UNLIM	-40 to 125	SSEB	Samples
LM3405AXMKX/NOPB	ACTIVE	SOT	DDC	6	3000	Green (RoHS & no Sb/Br)	CU SN	Level-1-260C-UNLIM	-40 to 125	SSEB	Samples
LM3405AXMY/NOPB	ACTIVE	MSOP-PowerPAD	DGN	8	1000	Green (RoHS & no Sb/Br)	CU SN	Level-1-260C-UNLIM		SVSA	Samples
LM3405AXMYX/NOPB	ACTIVE	MSOP-PowerPAD	DGN	8	3500	Green (RoHS & no Sb/Br)	CU SN	Level-1-260C-UNLIM		SVSA	Samples

(1) The marketing status values are defined as follows:
ACTIVE: Product device recommended for new designs.
LIFEBUY: TI has announced that the device will be discontinued, and a lifetime-buy period is in effect.
NRND: Not recommended for new designs. Device is in production to support existing customers, but TI does not recommend using this part in a new design.
PREVIEW: Device has been announced but is not in production. Samples may or may not be available.
OBSOLETE: TI has discontinued the production of the device.

(2) Eco Plan - The planned eco-friendly classification: Pb-Free (RoHS), Pb-Free (RoHS Exempt), or Green (RoHS & no Sb/Br) - please check http://www.ti.com/productcontent for the latest availability information and additional product content details.
TBD: The Pb-Free/Green conversion plan has not been defined.
Pb-Free (RoHS): TI's terms "Lead-Free" or "Pb-Free" mean semiconductor products that are compatible with the current RoHS requirements for all 6 substances, including the requirement that lead not exceed 0.1% by weight in homogeneous materials. Where designed to be soldered at high temperatures, TI Pb-Free products are suitable for use in specified lead-free processes.
Pb-Free (RoHS Exempt): This component has a RoHS exemption for either 1) lead-based flip-chip solder bumps used between the die and package, or 2) lead-based die adhesive used between the die and leadframe. The component is otherwise considered Pb-Free (RoHS compatible) as defined above.
Green (RoHS & no Sb/Br): TI defines "Green" to mean Pb-Free (RoHS compatible), and free of Bromine (Br) and Antimony (Sb) based flame retardants (Br or Sb do not exceed 0.1% by weight in homogeneous material)

(3) MSL, Peak Temp. -- The Moisture Sensitivity Level rating according to the JEDEC industry standard classifications, and peak solder temperature.

(4) Multiple Top-Side Markings will be inside parentheses. Only one Top-Side Marking contained in parentheses and separated by a "~" will appear on a device. If a line is indented then it is a continuation of the previous line and the two combined represent the entire Top-Side Marking for that device.

Important Information and Disclaimer: The information provided on this page represents TI's knowledge and belief as of the date that it is provided. TI bases its knowledge and belief on information provided by third parties, and makes no representation or warranty as to the accuracy of such information. Efforts are underway to better integrate information from third parties. TI has taken and continues to take reasonable steps to provide representative and accurate information but may not have conducted destructive testing or chemical analysis on incoming materials and chemicals. TI and TI suppliers consider certain information to be proprietary, and thus CAS numbers and other limited information may not be available for release.

In no event shall TI's liability arising out of such information exceed the total purchase price of the TI part(s) at issue in this document sold by TI to Customer on an annual basis.

TAPE AND REEL INFORMATION

REEL DIMENSIONS

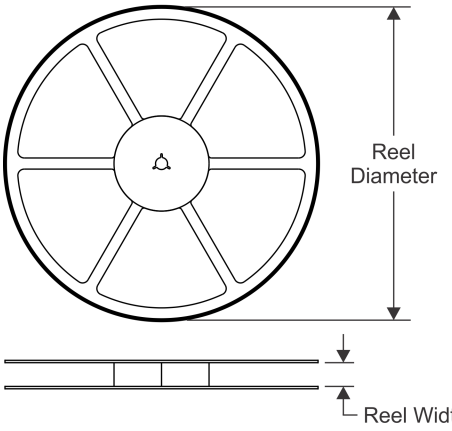

TAPE DIMENSIONS

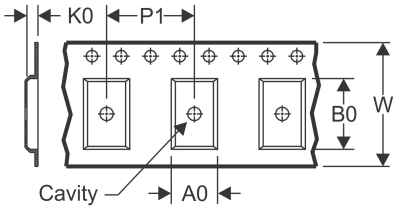

A0	Dimension designed to accommodate the component width
B0	Dimension designed to accommodate the component length
K0	Dimension designed to accommodate the component thickness
W	Overall width of the carrier tape
P1	Pitch between successive cavity centers

QUADRANT ASSIGNMENTS FOR PIN 1 ORIENTATION IN TAPE

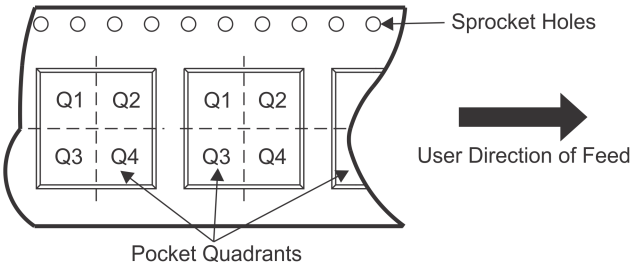

*All dimensions are nominal

Device	Package Type	Package Drawing	Pins	SPQ	Reel Diameter (mm)	Reel Width W1 (mm)	A0 (mm)	B0 (mm)	K0 (mm)	P1 (mm)	W (mm)	Pin1 Quadrant
LM3405AXMK/NOPB	SOT	DDC	6	1000	178.0	8.4	3.2	3.2	1.4	4.0	8.0	Q3
LM3405AXMKE/NOPB	SOT	DDC	6	250	178.0	8.4	3.2	3.2	1.4	4.0	8.0	Q3
LM3405AXMKX/NOPB	SOT	DDC	6	3000	178.0	8.4	3.2	3.2	1.4	4.0	8.0	Q3
LM3405AXMY/NOPB	MSOP-Power PAD	DGN	8	1000	178.0	12.4	5.3	3.4	1.4	8.0	12.0	Q1
LM3405AXMYX/NOPB	MSOP-Power PAD	DGN	8	3500	330.0	12.4	5.3	3.4	1.4	8.0	12.0	Q1

TAPE AND REEL BOX DIMENSIONS

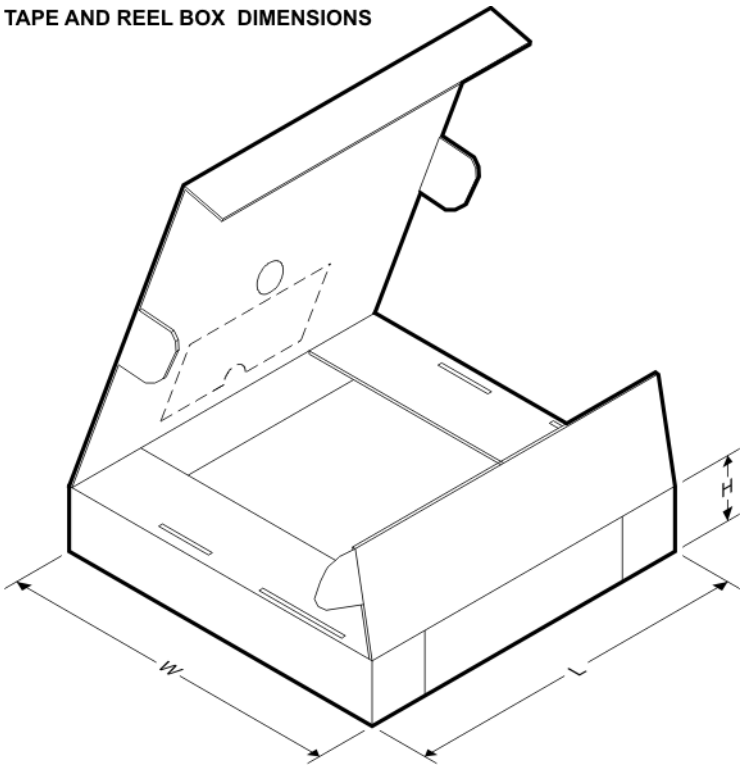

*All dimensions are nominal

Device	Package Type	Package Drawing	Pins	SPQ	Length (mm)	Width (mm)	Height (mm)
LM3405AXMK/NOPB	SOT	DDC	6	1000	210.0	185.0	35.0
LM3405AXMKE/NOPB	SOT	DDC	6	250	210.0	185.0	35.0
LM3405AXMKX/NOPB	SOT	DDC	6	3000	210.0	185.0	35.0
LM3405AXMY/NOPB	MSOP-PowerPAD	DGN	8	1000	210.0	185.0	35.0
LM3405AXMYX/NOPB	MSOP-PowerPAD	DGN	8	3500	367.0	367.0	35.0

DGN0008A

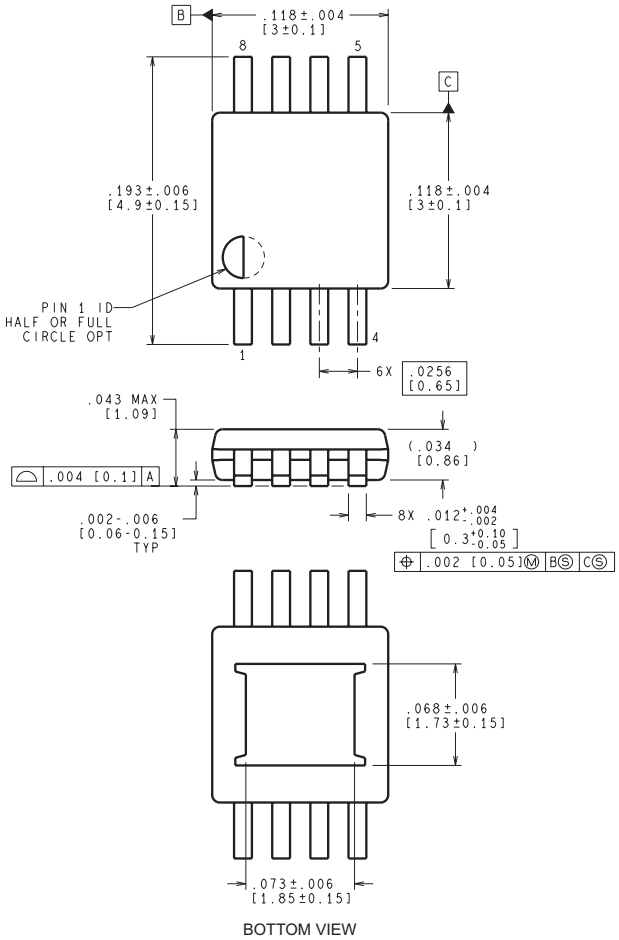

BOTTOM VIEW

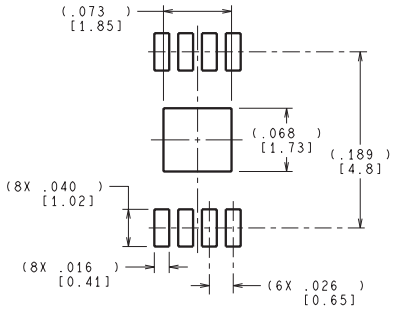

RECOMMENDED LAND PATTERN

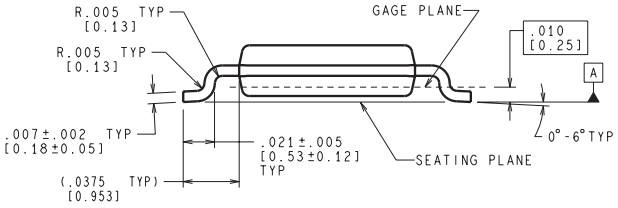

CONTROLLING DIMENSION IS INCH
VALUES IN [ ] ARE MILLIMETERS

MUY08A (Rev A)

DDC (R–PDSO–G6) PLASTIC SMALL–OUTLINE

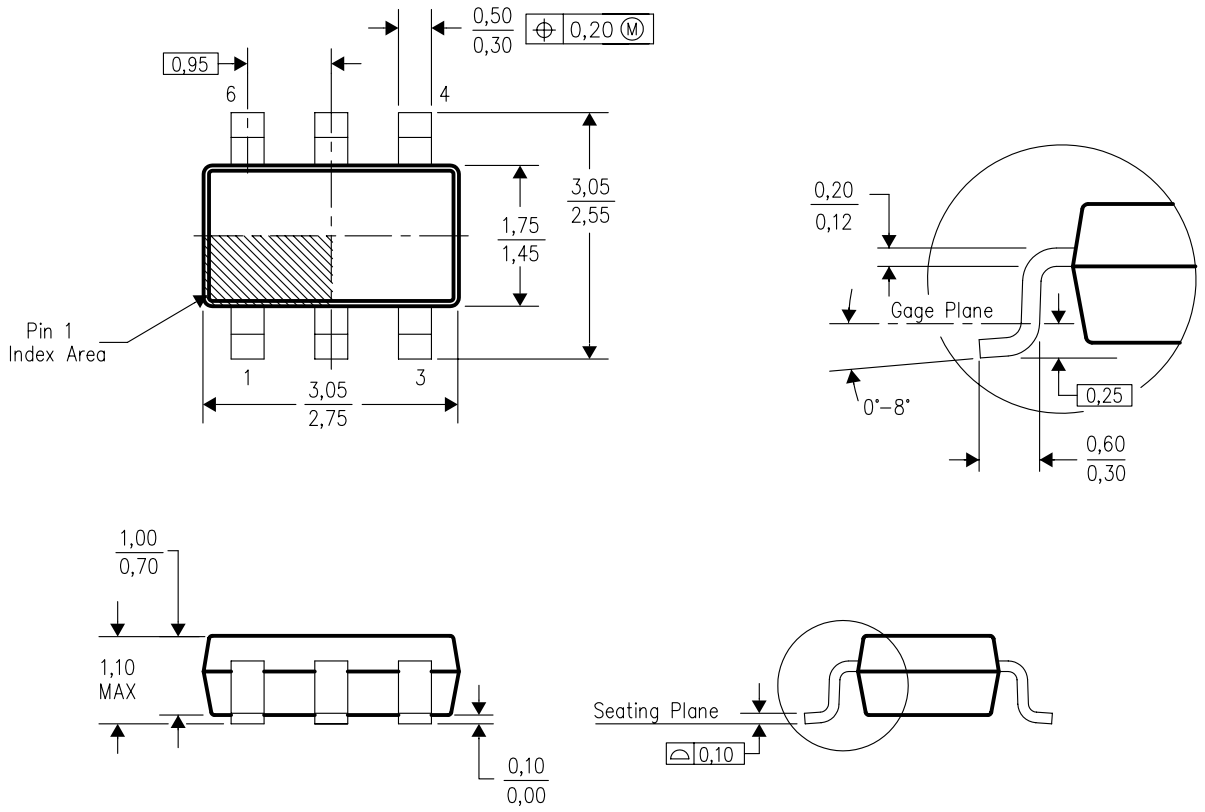

4204403–3/E 06/05

NOTES:
A. All linear dimensions are in millimeters.
B. This drawing is subject to change without notice.
C. Body dimensions do not include mold flash or protrusion.
D. Falls within JEDEC MO–193 variation AA (6 pin).

DDC (R–PDSO–G6) PLASTIC SMALL OUTLINE

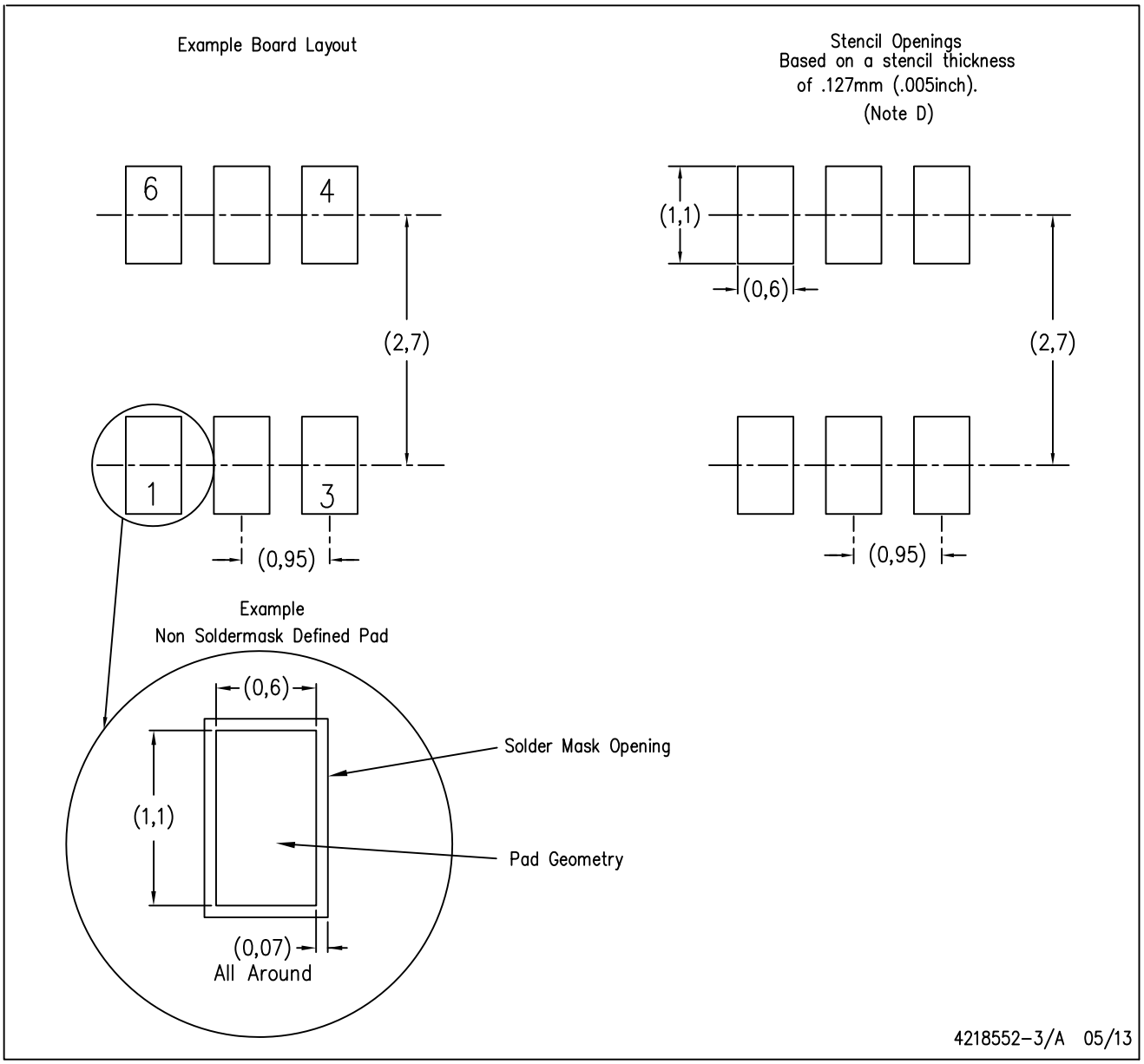

NOTES:
A. All linear dimensions are in millimeters.
B. This drawing is subject to change without notice.
C. Publication IPC–7351 is recommended for alternate designs.
D. Laser cutting apertures with trapezoidal walls and also rounding corners will offer better paste release. Customers should contact their board assembly site for stencil design recommendations. Example stencil design based on a 50% volumetric metal load solder paste. Refer to IPC–7525 for other stencil recommendations.

IMPORTANT NOTICE

Texas Instruments Incorporated and its subsidiaries (TI) reserve the right to make corrections, enhancements, improvements and other changes to its semiconductor products and services per JESD46, latest issue, and to discontinue any product or service per JESD48, latest issue. Buyers should obtain the latest relevant information before placing orders and should verify that such information is current and complete. All semiconductor products (also referred to herein as “components”) are sold subject to TI’s terms and conditions of sale supplied at the time of order acknowledgment.

TI warrants performance of its components to the specifications applicable at the time of sale, in accordance with the warranty in TI’s terms and conditions of sale of semiconductor products. Testing and other quality control techniques are used to the extent TI deems necessary to support this warranty. Except where mandated by applicable law, testing of all parameters of each component is not necessarily performed.

TI assumes no liability for applications assistance or the design of Buyers’ products. Buyers are responsible for their products and applications using TI components. To minimize the risks associated with Buyers’ products and applications, Buyers should provide adequate design and operating safeguards.

TI does not warrant or represent that any license, either express or implied, is granted under any patent right, copyright, mask work right, or other intellectual property right relating to any combination, machine, or process in which TI components or services are used. Information published by TI regarding third-party products or services does not constitute a license to use such products or services or a warranty or endorsement thereof. Use of such information may require a license from a third party under the patents or other intellectual property of the third party, or a license from TI under the patents or other intellectual property of TI.

Reproduction of significant portions of TI information in TI data books or data sheets is permissible only if reproduction is without alteration and is accompanied by all associated warranties, conditions, limitations, and notices. TI is not responsible or liable for such altered documentation. Information of third parties may be subject to additional restrictions.

Resale of TI components or services with statements different from or beyond the parameters stated by TI for that component or service voids all express and any implied warranties for the associated TI component or service and is an unfair and deceptive business practice. TI is not responsible or liable for any such statements.

Buyer acknowledges and agrees that it is solely responsible for compliance with all legal, regulatory and safety-related requirements concerning its products, and any use of TI components in its applications, notwithstanding any applications-related information or support that may be provided by TI. Buyer represents and agrees that it has all the necessary expertise to create and implement safeguards which anticipate dangerous consequences of failures, monitor failures and their consequences, lessen the likelihood of failures that might cause harm and take appropriate remedial actions. Buyer will fully indemnify TI and its representatives against any damages arising out of the use of any TI components in safety-critical applications.

In some cases, TI components may be promoted specifically to facilitate safety-related applications. With such components, TI’s goal is to help enable customers to design and create their own end-product solutions that meet applicable functional safety standards and requirements. Nonetheless, such components are subject to these terms.

No TI components are authorized for use in FDA Class III (or similar life-critical medical equipment) unless authorized officers of the parties have executed a special agreement specifically governing such use.

Only those TI components which TI has specifically designated as military grade or “enhanced plastic” are designed and intended for use in military/aerospace applications or environments. Buyer acknowledges and agrees that any military or aerospace use of TI components which have ***not*** been so designated is solely at the Buyer's risk, and that Buyer is solely responsible for compliance with all legal and regulatory requirements in connection with such use.

TI has specifically designated certain components as meeting ISO/TS16949 requirements, mainly for automotive use. In any case of use of non-designated products, TI will not be responsible for any failure to meet ISO/TS16949.

Products		**Applications**	
Audio	www.ti.com/audio	Automotive and Transportation	www.ti.com/automotive
Amplifiers	amplifier.ti.com	Communications and Telecom	www.ti.com/communications
Data Converters	dataconverter.ti.com	Computers and Peripherals	www.ti.com/computers
DLP® Products	www.dlp.com	Consumer Electronics	www.ti.com/consumer-apps
DSP	dsp.ti.com	Energy and Lighting	www.ti.com/energy
Clocks and Timers	www.ti.com/clocks	Industrial	www.ti.com/industrial
Interface	interface.ti.com	Medical	www.ti.com/medical
Logic	logic.ti.com	Security	www.ti.com/security
Power Mgmt	power.ti.com	Space, Avionics and Defense	www.ti.com/space-avionics-defense
Microcontrollers	microcontroller.ti.com	Video and Imaging	www.ti.com/video
RFID	www.ti-rfid.com		
OMAP Applications Processors	www.ti.com/omap	**TI E2E Community**	e2e.ti.com
Wireless Connectivity	www.ti.com/wirelessconnectivity		

Mailing Address: Texas Instruments, Post Office Box 655303, Dallas, Texas 75265
Copyright © 2013, Texas Instruments Incorporated