SLG46534

GreenPAK
Programmable Mixed-signal Matrix with Asynchronous State Machine

Features

- Logic & Mixed Signal Circuits
- Highly Versatile Macrocells
- Read Back Protection (Read Lock)
- 1.8 V (±5%) to 5 V (±10%) Supply
- Operating Temperature Range: -40°C to 85°C
- RoHS Compliant / Halogen-Free
- 14-pin STQFN: 2 x 2.2 x 0.55 mm, 0.4 mm pitch

Applications

- Personal Computers and Servers
- PC Peripherals
- Consumer Electronics
- Data Communications Equipment
- Handheld and Portable Electronics

Pin Configuration

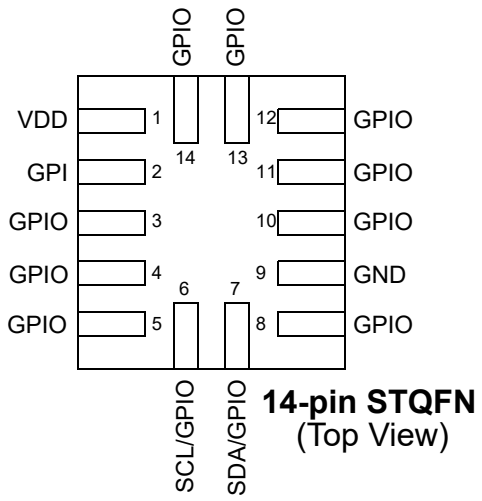

Block Diagram

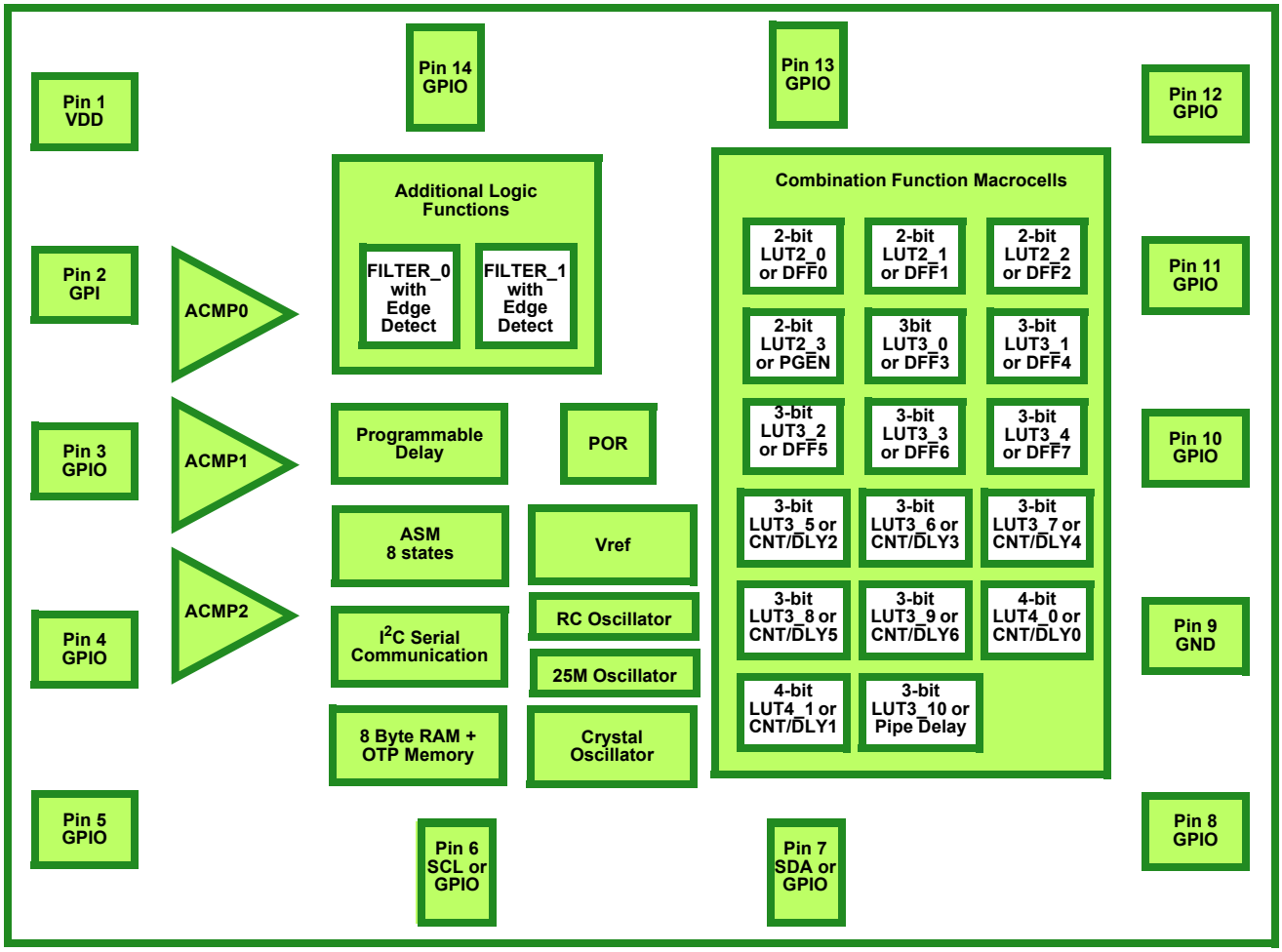

1.0 Overview

The SLG46534 provides a small, low power component for commonly used mixed-signal functions. The user creates their circuit design by programming the one time Non-Volatile Memory (NVM) to configure the interconnect logic, the I/O Pins and the macrocells of the SLG46534. This highly versatile device allows a wide variety of mixed-signal functions to be designed within a very small, low power single integrated circuit. The macrocells in the device include the following:

- Three Analog Comparators (ACMP)
- Nineteen Combination Function Macrocells
  - Three Selectable DFF/Latch or 2-bit LUTs
  - One Selectable Continuous DFF/Latch or 3-bit LUT
  - Four Selectable DFF/Latch or 3-bit LUTs
  - One Selectable Pipe Delay or 3-bit LUT
  - One Selectable Programmable Pattern Generator or 2-bit LUT
  - Five 8-bit delays/counters or 3-bit LUTs
  - Two 16-bit delays/counters or 4-bit LUTs
  - Two Deglitch Filters with Edge Detectors
- Asynchronous State Machine
  - Eight States
  - Flexible input logic from state transitions
- Serial Communications
  - I^2C Protocol compliant
- Pipe Delay – 16 stage/3 output (Part of Combination Function Macrocell)
- Programmable Delay
- Two Oscillators (OSC)
  - Configurable 25 kHz/2 MHz
  - 25 MHz RC Oscillator
- Crystal Oscillator
- Power-On-Reset (POR)
- Eight Byte RAM + OTP User Memory
  - RAM Memory space that is readable and writable via I^2C
  - User defined initial values transferred from OTP

2.0 Pin Description

2.1 Functional Pin Description

Pin #	Pin Name	Function
1	VDD	Power Supply
2	GPI	General Purpose Input
3	GPIO	General Purpose I/O
4	GPIO	General Purpose I/O or ACMP0 (+)
5	GPIO	General Purpose I/O with OE or External Vref (ACMP0 IN-)
6	SCL/GPIO	General Purpose I/O SCL or GPIOD (NMOS open drain only)
7	SDA/GPIO	General Purpose I/O SDA or GPIOD (NMOS open drain only)
8	GPIO	General Purpose I/O with OE or ACMP1 (+)
9	GND	Ground
10	GPIO	General Purpose I/O External Vref (ACMP1 IN-)
11	GPIO	General Purpose I/O with OE
12	GPIO	General Purpose I/O with OE
13	GPIO	General Purpose I/O
14	GPIO	General Purpose I/O or External Clock Input

3.0 User Programmability

Non-volatile memory (NVM) is used to configure the SLG46534's connection matrix routing and macrocells. The NVM is One-Time-Programmable (OTP). However, Silego's GreenPAK development tools can be used to configure the connection matrix and macrocells, without programming the NVM, to allow on-chip emulation. This configuration will remain active on the device as long as it remains powered and can be re-written as needed to facilitate rapid design changes.

When a design is ready for in-circuit testing, the same GreenPAK development tools can be used to program the NVM and create samples for small quantity builds. Once the NVM is programmed, the device will retain this configuration for the duration of its lifetime.

Once the design is finalized, the design file can be forwarded to Silego to integrate into the production process.

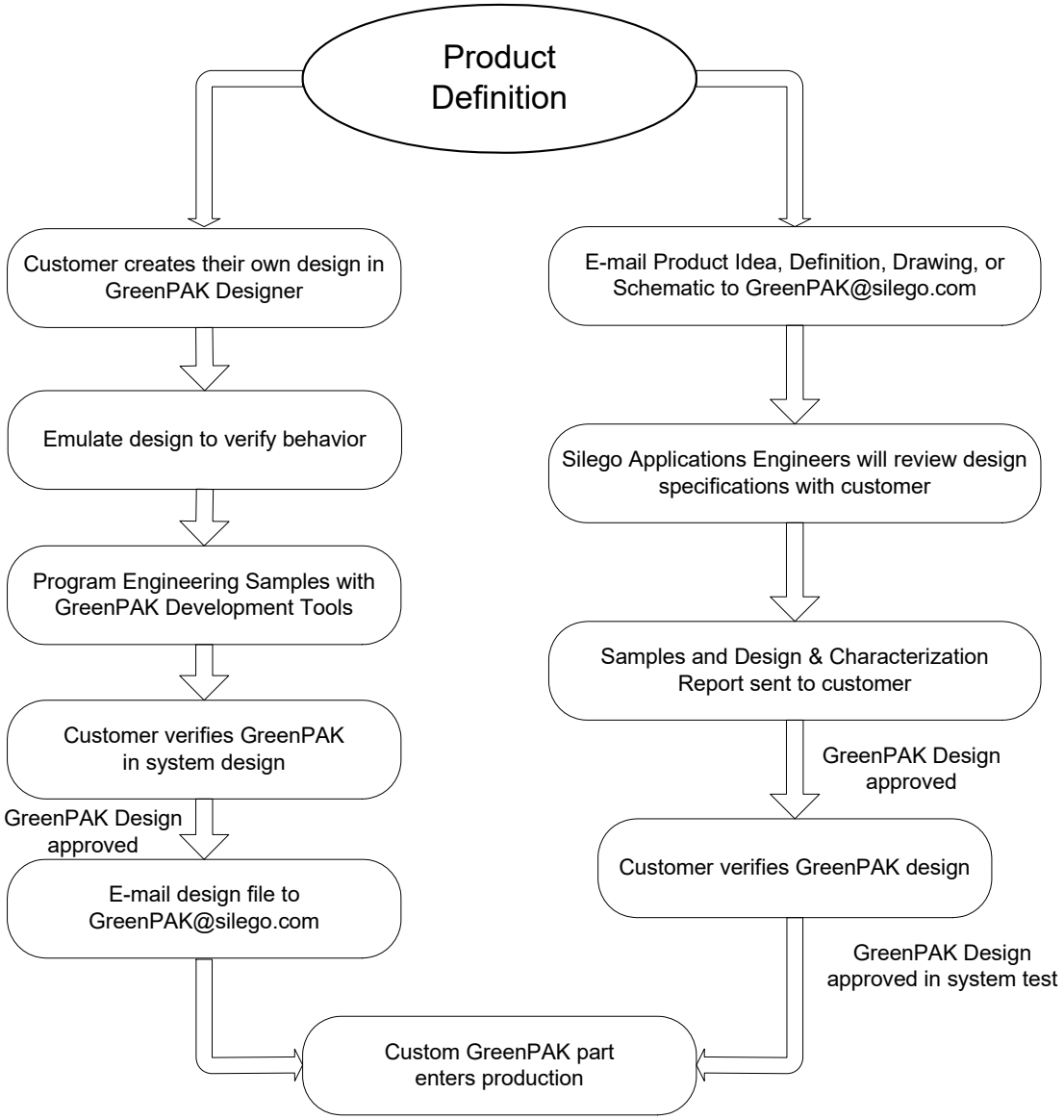

Figure 1. Steps to create a custom Silego GreenPAK device

4.0 Ordering Information

Part Number	Type
SLG46534V	14-pin STQFN
SLG46534VTR	14-pin STQFN - Tape and Reel (3k units)

5.0 Electrical Specifications

5.1 Absolute Maximum Conditions

Parameter		Min.	Max.	Unit
Supply voltage on VDD relative to GND		-0.5	7	V
DC Input voltage		GND - 0.5	VDD + 0.5	V
Maximum Average or DC Current (Through pin)	Push-Pull 1x	--	11	mA
	Push-Pull 2x	--	16	
	OD 1x	--	11	
	OD 2x	--	21	
	OD 4x	--	43	
Current at Input Pin		-1.0	1.0	mA
Storage Temperature Range		-65	150	°C
Junction Temperature		--	150	°C
ESD Protection (Human Body Model)		2000	--	V
ESD Protection (Charged Device Model)		1300	--	V
Moisture Sensitivity Level		1		

5.2 Electrical Characteristics (1.8 V ±5% V_{DD})

Symbol	Parameter	Condition/Note	Min.	Typ.	Max.	Unit
V_{DD}	Supply Voltage		1.71	1.80	1.89	V
T_A	Operating Temperature		-40	25	85	°C
V_{PP}	Programming Voltage		7.25	7.50	7.75	V
V_{ACMP}	ACMP Input Voltage Range	Positive Input	0	--	V_{DD}	V
		Negative Input	0	--	1.2	V
V_{IH}	HIGH-Level Input Voltage	Logic Input	1.06	--	V_{DD}	V
		Logic Input with Schmitt Trigger	1.28	--	V_{DD}	V
		Low-Level Logic Input	0.94	--	V_{DD}	V
V_{IL}	LOW-Level Input Voltage	Logic Input	0	--	0.76	V
		Logic Input with Schmitt Trigger	0	--	0.49	V
		Low-Level Logic Input	0	--	0.52	V
V_{HYS}	Schmitt Trigger Hysteresis Voltage	Logic Input with Schmitt Trigger	0.10	0.41	0.66	V
I_{LKG}	Input leakage (Absolute Value)		--	1	1000	nA
V_{OH}	HIGH-Level Output Voltage	Push-Pull, I_{OH} = 100 µA, 1X Drive	1.69	1.79	--	V
		PMOS OD, I_{OH} = 100 µA, 1X Drive	1.69	1.79	--	V
		Push-Pull, I_{OH} = 100 µA, 2X Drive	1.70	1.79	--	V
		PMOS OD, I_{OH} = 100 µA, 2X Drive	1.70	1.79	--	V

Symbol	Parameter	Condition/Note	Min.	Typ.	Max.	Unit
V_{OL}	LOW-Level Output Voltage	Push-Pull, I_{OL}= 100 μA, 1X Drive	--	0.009	0.013	V
		Push-Pull, I_{OL} = 100 μA, 2X Drive	--	0.004	0.006	V
		Open Drain, I_{OL} = 100 μA, 1X Drive	--	0.006	0.009	V
		Open Drain, I_{OL} = 100 μA, 2X Drive	--	0.003	0.004	V
		Open Drain NMOS 4X, I_{OL} = 100 μA	--	0.001	0.002	V
I_{OH}	HIGH-Level Output Pulse Current (see Note 1)	Push-Pull, V_{OH} = V_{DD} - 0.2, 1X Drive	1.07	1.70	--	mA
		PMOS OD, V_{OH} = V_{DD} - 0.2, 1X Drive	1.07	1.70	--	mA
		Push-Pull, V_{OH} = V_{DD} - 0.2, 2X Drive	2.22	3.41	--	mA
		PMOS OD, V_{OH} = V_{DD} - 0.2, 2X Drive	2.22	3.41	--	mA
I_{OL}	LOW-Level Output Pulse Current (see Note 1)	Push-Pull, V_{OL} = 0.15 V, 1X Drive	0.92	1.69	--	mA
		Push-Pull, V_{OL} = 0.15 V, 2X Drive	1.83	3.38	--	mA
		Open Drain, V_{OL} = 0.15 V, 1X Drive	1.38	2.53	--	mA
		Open Drain, V_{OL} = 0.15 V, 2X Drive	2.75	5.07	--	mA
		Open Drain NMOS 4X, V_{OL} = 0.15 V	7.21	9.00	--	mA
I_{VDD}	Maximum Average or DC Current Through VDD Pin (Per chip side, see Note 2)	T_J = 85°C	--	--	45	mA
		T_J = 110°C	--	--	22	mA
I_{GND}	Maximum Average or DC Current Through GND Pin (Per chip side, see Note 2)	T_J = 85°C	--	--	86	mA
		T_J = 110°C	--	--	41	mA
V_O	Maximal Voltage Applied to any PIN in High-Impedance State		--	--	V_{DD}	V
T_{SU}	Startup Time	From VDD rising past PON_{THR}	0.63	1.36	1.87	ms
PON_{THR}	Power On Threshold	V_{DD} Level Required to Start Up the Chip	1.41	1.54	1.66	V
$POFF_{THR}$	Power Off Threshold	V_{DD} Level Required to Switch Off the Chip	1.00	1.15	1.31	V
R_{PUP}	Pull Up Resistance	1 M Pull Up	859.8	1097.1	1358.9	kΩ
		100 k Pull Up	86.47	110.13	136.18	kΩ
		10 k Pull Up	10.82	12.86	15.36	kΩ
R_{PDWN}	Pull Down Resistance	1 M Pull Down	873.9	1097.0	1359.0	kΩ
		100 k Pull Down	88.89	110.53	136.55	kΩ
		10 k Pull Down	9.65	12.75	15.76	kΩ

Note 1: DC or average current through any pin should not exceed value given in Absolute Maximum Conditions.
Note 2: The GreenPAK's power rails are divided in two sides. Pins 2, 3, 4, 5, 6, 7 and 8 are connected to one side, pins 10, 11, 12, 13 and 14 to another.

5.3 Electrical Characteristics (3.3 V ±10% V_{DD})

Symbol	Parameter	Condition/Note	Min.	Typ.	Max.	Unit
V_{DD}	Supply Voltage		3.0	3.3	3.6	V
T_A	Operating Temperature		-40	25	85	°C
V_{PP}	Programming Voltage		7.25	7.50	7.75	V
V_{ACMP}	ACMP Input Voltage Range	Positive Input	0	--	V_{DD}	V
		Negative Input	0	--	1.2	V
V_{IH}	HIGH-Level Input Voltage	Logic Input	1.81	--	V_{DD}	V
		Logic Input with Schmitt Trigger	2.14	--	V_{DD}	V
		Low-Level Logic Input	1.06	--	V_{DD}	V
V_{IL}	LOW-Level Input Voltage	Logic Input	0	--	1.31	V
		Logic Input with Schmitt Trigger	0	--	0.97	V
		Low-Level Logic Input	0	--	0.67	V
V_{HYS}	Schmitt Trigger Hysteresis Voltage	Logic Input with Schmitt Trigger	0.29	0.62	0.94	V
I_{LGK}	Input leakage (Absolute Value)		--	1	1000	nA
V_{OH}	HIGH-Level Output Voltage	Push-Pull, I_{OH} = 3 mA, 1X Drive	2.70	3.12	--	V
		PMOS OD, I_{OH} = 3 mA, 1X Drive	2.70	3.12	--	V
		Push-Pull, I_{OH} = 3 mA, 2X Drive	2.85	3.21	--	V
		PMOS OD, I_{OH} = 3 mA, 2X Drive	2.86	3.21	--	V
V_{OL}	LOW-Level Output Voltage	Push-Pull, I_{OL}= 3 mA, 1X Drive	--	0.13	0.23	V
		Push-Pull, I_{OL} = 3 mA, 2X Drive	--	0.06	0.11	V
		Open Drain, I_{OL} = 3 mA, 1X Drive	--	0.08	0.15	V
		Open Drain, I_{OL} = 3 mA, 2X Drive	--	0.04	0.08	V
		Open Drain NMOS 4X, I_{OL} = 3 mA	--	0.02	0.04	V
I_{OH}	HIGH-Level Output Pulse Current (see Note 1)	Push-Pull, V_{OH} = 2.4 V, 1X Drive	6.05	12.08	--	mA
		PMOS OD, V_{OH} = 2.4 V, 1X Drive	6.05	12.08	--	mA
		Push-Pull, V_{OH} = 2.4 V, 2X Drive	11.54	24.16	--	mA
		PMOS OD, V_{OH} = 2.4 V, 2X Drive	11.52	24.16	--	mA
I_{OL}	LOW-Level Output Pulse Current (see Note 1)	Push-Pull, V_{OL} = 0.4 V, 1X Drive	4.88	8.24	--	mA
		Push-Pull, V_{OL} = 0.4 V, 2X Drive	9.75	16.49	--	mA
		Open Drain, V_{OL} = 0.4 V, 1X Drive	7.31	12.37	--	mA
		Open Drain, V_{OL} = 0.4 V, 2X Drive	14.54	24.74	--	mA
		Open Drain NMOS 4X, V_{OL} = 0.4 V	31.32	41.06	--	mA
I_{VDD}	Maximum Average or DC Current Through VDD Pin (Per chip side, see Note 2)	T_J = 85°C	--	--	45	mA
		T_J = 110°C	--	--	22	mA
I_{GND}	Maximum Average or DC Current Through GND Pin (Per chip side, see Note 2)	T_J = 85°C	--	--	86	mA
		T_J = 110°C	--	--	41	mA

Symbol	Parameter	Condition/Note	Min.	Typ.	Max.	Unit
V_O	Maximal Voltage Applied to any PIN in High-Impedance State		--	--	V_{DD}	V
T_{SU}	Startup Time	From VDD rising past PON_{THR}	0.61	1.24	1.65	ms
PON_{THR}	Power On Threshold	V_{DD} Level Required to Start Up the Chip	1.41	1.54	1.66	V
$POFF_{THR}$	Power Off Threshold	V_{DD} Level Required to Switch Off the Chip	1.00	1.15	1.31	V
R_{PUP}	Pull Up Resistance	1 M Pull Up	873.2	1094.7	1364.3	kΩ
		100 k Pull Up	85.17	109.30	135.52	kΩ
		10 k Pull Up	9.61	11.86	14.73	kΩ
R_{PDWN}	Pull Down Resistance	1 M Pull Down	862.5	1096.3	1357.4	kΩ
		100 k Pull Down	87.95	109.76	136.06	kΩ
		10 k Pull Down	8.66	11.81	15.05	kΩ

Note 1: DC or average current through any pin should not exceed value given in Absolute Maximum Conditions.
Note 2: The GreenPAK's power rails are divided in two sides. Pins 2, 3, 4, 5, 6, 7 and 8 are connected to one side, pins 10, 11, 12, 13 and 14 to another.

5.4 Electrical Characteristics (5 V ±10% V_{DD})

Symbol	Parameter	Condition/Note	Min.	Typ.	Max.	Unit
V_{DD}	Supply Voltage		4.5	5.0	5.5	V
T_A	Operating Temperature		-40	25	85	°C
V_{PP}	Programming Voltage		7.25	7.50	7.75	V
V_{ACMP}	ACMP Input Voltage Range	Positive Input	0	--	V_{DD}	V
		Negative Input	0	--	1.2	V
V_{IH}	HIGH-Level Input Voltage	Logic Input	2.68	--	V_{DD}	V
		Logic Input with Schmitt Trigger	3.34	--	V_{DD}	V
		Low-Level Logic Input	1.15	--	V_{DD}	V
V_{IL}	LOW-Level Input Voltage	Logic Input	0	--	1.96	V
		Logic Input with Schmitt Trigger	0	--	1.41	V
		Low-Level Logic Input	0	--	0.77	V
V_{HYS}	Schmitt Trigger Hysteresis Voltage	Logic Input with Schmitt Trigger	0.44	0.90	1.38	V
I_{LGK}	Input leakage (Absolute Value)		--	1	1000	nA
V_{OH}	HIGH-Level Output Voltage	Push-Pull, I_{OH} = 5 mA, 1X Drive	4.15	4.76	--	V
		PMOS OD, I_{OH} = 5 mA, 1X Drive	4.16	4.76	--	V
		Push-Pull, I_{OH} = 5 mA, 2X Drive	4.32	4.89	--	V
		PMOS OD, I_{OH} = 5 mA, 2X Drive	4.33	4.89	--	V
V_{OL}	LOW-Level Output Voltage	Push-Pull, I_{OL}= 5 mA, 1X Drive	--	0.19	0.24	V
		Push-Pull, I_{OL} =5 mA, 2X Drive	--	0.09	0.12	V
		Open Drain, I_{OL} = 5 mA, 1X Drive	--	0.12	0.16	V
		Open Drain, I_{OL} = 5 mA, 2X Drive	--	0.07	0.08	V
		Open Drain NMOS 4X, I_{OL} = 5 mA	--	0.03	0.05	V
I_{OH}	HIGH-Level Output Pulse Current (see Note 1)	Push-Pull, V_{OH} = 2.4 V, 1X Drive	22.08	34.04	--	mA
		PMOS OD, V_{OH} = 2.4 V, 1X Drive	22.08	34.04	--	mA
		Push-Pull, V_{OH} = 2.4 V, 2X Drive	41.76	68.08	--	mA
		PMOS OD, V_{OH} = 2.4 V, 2X Drive	41.69	68.08	--	mA
I_{OL}	LOW-Level Output Pulse Current (see Note 1)	Push-Pull, V_{OL} = 0.4 V, 1X Drive	7.22	11.58	--	mA
		Push-Pull, V_{OL} = 0.4 V, 2X Drive	13.83	23.16	--	mA
		Open Drain, V_{OL} = 0.4 V, 1X Drive	10.82	17.38	--	mA
		Open Drain, V_{OL} = 0.4 V, 2X Drive	17.34	34.76	--	mA
		Open Drain NMOS 4X, V_{OL} = 0.4 V	41.06	55.18	--	mA
I_{VDD}	Maximum Average or DC Current Through VDD Pin (Per chip side, see Note 2)	T_J = 85°C	--	--	45	mA
		T_J = 110°C	--	--	22	mA
I_{GND}	Maximum Average or DC Current Through GND Pin (Per chip side, see Note 2)	T_J = 85°C	--	--	86	mA
		T_J = 110°C	--	--	41	mA

Symbol	Parameter	Condition/Note	Min.	Typ.	Max.	Unit
V_O	Maximal Voltage Applied to any PIN in High-Impedance State		--	--	V_{DD}	V
T_{SU}	Startup Time	From VDD rising past PON_{THR}	0.60	1.23	1.61	ms
PON_{THR}	Power On Threshold	V_{DD} Level Required to Start Up the Chip	1.41	1.54	1.66	V
$POFF_{THR}$	Power Off Threshold	V_{DD} Level Required to Switch Off the Chip	1.00	1.15	1.31	V
R_{PUP}	Pull Up Resistance	1 M Pull Up	864.6	1093.4	1348.1	kΩ
		100 k Pull Up	84.32	108.97	135.24	kΩ
		10 k Pull Up	8.74	11.37	14.52	kΩ
R_{PDWN}	Pull Down Resistance	1 M Pull Down	873.3	1096.1	1370.5	kΩ
		100 k Pull Down	87.57	109.48	135.89	kΩ
		10 k Pull Down	7.95	11.33	14.78	kΩ

Note 1: DC or average current through any pin should not exceed value given in Absolute Maximum Conditions.
Note 2: The GreenPAK's power rails are divided in two sides. Pins 2, 3, 4, 5, 6, 7 and 8 are connected to one side, pins 10, 11, 12, 13 and 14 to another.

5.5 I²C Specifications

Symbol	Parameter	Condition/Note	Min.	Typ.	Max.	Unit
F_{SCL}	Clock Frequency, SCL	V_{DD} = (1.71...5.5) V	--	--	400	kHz
t_{LOW}	Clock Pulse Width Low	V_{DD} = (1.71...5.5) V	1300			ns
t_{HIGH}	Clock Pulse Width High	V_{DD} = (1.71...5.5) V	600	--	--	ns
t_I	Input Filter Spike Suppression (SCL, SDA)	V_{DD} = 1.8 V ± 5 %	--	--	95	ns
		V_{DD} = 3.3 V ± 10%			95	
		V_{DD} = 5.0 V ± 10 %			111	
t_{AA}	Clock Low to Data Out Valid	V_{DD} = (1.71...5.5) V	--	--	900	ns
t_{BUF}	Bus Free Time between Stop and Start	V_{DD} = (1.71...5.5) V	1300	--	--	ns
t_{HD_STA}	Start Hold Time	V_{DD} = (1.71...5.5) V	600	--	--	ns
t_{SU_STA}	Start Set-up Time	V_{DD} = (1.71...5.5) V	600	--	--	ns
t_{HD_DAT}	Data Hold Time	V_{DD} = (1.71...5.5) V	0	--	--	ns
t_{SU_DAT}	Data Set-up Time	V_{DD} = (1.71...5.5) V	100	--	--	ns
t_R	Inputs Rise Time	V_{DD} = (1.71...5.5) V	--	--	300	ns
t_F	Inputs Fall Time	V_{DD} = (1.71...5.5) V	--	--	300	ns
t_{SU_STO}	Stop Set-up Time	V_{DD} = (1.71...5.5) V	600	--	--	ns
t_{DH}	Data Out Hold Time	V_{DD} = (1.71...5.5) V	50	--	--	ns

5.6 Asynchronous State Machine (ASM) Specifications

Symbol	Parameter	Condition/Note	Min.	Typ.	Max.	Unit
$t_{st_out_delay}$	Asynchronous State Machine Output Delay Time	V_{DD} = 1.8 V ± 5 %	225	--	275	ns
		V_{DD} = 3.3 V ± 10%	95		118	
		V_{DD} = 5.0 V ± 10 %	67	--	77	

Symbol	Parameter	Condition/Note	Min.	Typ.	Max.	Unit
t_{st_out}	Asynchronous State Machine Output Transition Time	V_{DD} = 1.8 V ± 5 %	--	--	165	ns
		V_{DD} = 3.3 V ± 10%			70	
		V_{DD} = 5.0 V ± 10 %		--	46	
t_{st_pulse}	Asynchronous State Machine Input Pulse Acceptance Time	V_{DD} = 1.8 V ± 5 %	29	--	--	ns
		V_{DD} = 3.3 V ± 10%	14			
		V_{DD} = 5.0 V ± 10 %	9.2	--		
t_{st_comp}	Asynchronous State Machine Input Compete Time	V_{DD} = 1.8 V ± 5 %	--	--	29	ns
		V_{DD} = 3.3 V ± 10%			14	
		V_{DD} = 5.0 V ± 10 %		--	10	

5.7 IDD Estimator

Table 1. Typical Current Estimated for Each Macrocell at T=25°C

Symbol	Parameter	Note	V_{DD} = 1.8 V	V_{DD} = 3.3V	V_{DD} = 5.0V	Unit
I	Current	Chip Quiescent	0.45	0.75	1.12	µA
		OSC 2 MHz, predivide = 1	41.48	64.00	94.89	µA
		OSC 2 MHz, predivide = 8	25.68	32.41	43.22	µA
		OSC 25 kHz, predivide = 1	7.16	7.94	9.25	µA
		OSC 25 kHz, predivide = 8	6.97	7.60	8.68	µA
		OSC 25 MHz, predivide = 1	87.25	238.27	428.66	µA
		OSC 25 MHz, predivide = 8	78.01	212.45	390.17	µA
		ACMP (each)	54.96	52.64	60.81	µA
		ACMP with buffer (each)	75.06	72.74	81.25	µA
		Vref (each)	49.70	47.32	55.60	µA
		Vref with Buffer (each)	71.93	71.27	79.62	µA

5.8 Timing Estimator

Table 2. Typical Delay Estimated for Each Macrocell at T=25°C

Symbol	Parameter	Note	V_{DD} = 1.8 V		V_{DD} = 3.3V		V_{DD} = 5.0V		Unit
			rising	falling	rising	falling	rising	falling	
tpd	Delay	Digital Input to PP 1X	45	50	19	21	14	15	ns
tpd	Delay	Digital Input with Schmitt Trigger to PP 1X	44	49	19	21	14	15	ns
tpd	Delay	Low Voltage Digital input to PP 1X	46	447	19	195	14	134	ns
tpd	Delay	Digital input to PMOS output	44	-	19	-	14	-	ns
tpd	Delay	Digital input to NMOS output	-	81	-	30	-	20	ns
tpd	Delay	Output enable from pin, OE Hi-Z to 1	48	-	20	-	15	-	ns
tpd	Delay	Output enable from pin, OE Hi-Z to 0	-	46	-	20	-	24	ns
tpd	Delay	LUT2bit (LATCH)	34	33	14	13	10	9	ns
tpd	Delay	LATCH (LUT2bit)	30	34	14	13	10	9	ns
tpd	Delay	LUT3bit (LATCH)	38	37	18	15	13	10	ns
tpd	Delay	LATCH+nRESET (LUT3bit)	45	42	21	17	15	12	ns
tpd	Delay	LATCH	33	5	14	14			ns
tpd	Delay	LUT4bit	28	33	14	13	10	9	ns
tpd	Delay	LUT2bit	31	31	14	13	10	9	ns
tpd	Delay	LUT3bit	35	33	15	13	11	10	ns
tpd	Delay	CNT/DLY Logic	62	68	27	29	19	20	ns
tpd	Delay	DFF	32	28	14	12	11	9	ns
tpd	Delay	P_DLY1C	62	68	27	29	19	20	ns
tpd	Delay	P_DLY2C	667	656	303	297	225	221	ns
tpd	Delay	P_DLY3C	968	956	440	434	327	322	ns
tpd	Delay	P_DLY4C	1265	1252	576	570	428	423	ns
tpd	Delay	Filter	213	210	84	83	55	55	ns
tpd	Delay	ACMP (5 mV overdrive, IN- = 600 mV)	1600	1900	1500	1800	1600	1800	ns
tw	width	I/O with 1X push pull (min transmitted)	20	20	20	20	20	20	ns
tw	width	filter (min transmitted)	150	150	55	55	35	35	ns

5.9 Typical Counter/Delay Offset Measurements

Table 3. Typical Counter/Delay Offset Measurements

Parameter	RC OSC Freq	RC OSC Power	V_{DD} = 1.8 V	V_{DD} = 3.3V	V_{DD} = 5.0V	Unit
Offset (Power On Delay)	25 kHz	auto	1.6	1.6	1.6	µs
Offset (Power On Delay), fast start	25 kHz	auto	2.1	2.1	2.1	µs
Offset (Power On Delay)	2 MHz	auto	0.4	0.2	0.2	µs
Offset (Power On Delay), fast start	2 MHz	auto	0.7	0.5	0.4	µs
Offset (Power On Delay)	25 MHz	auto	0.01	0.05	0.04	µs
Frequency settling time	25 kHz	auto	19	14	12	µs
Frequency settling time	2 MHz	auto	14	14	14	µs
Variable (CLK period)	25 kHz	forced	0-40	0-40	0-40	µs
Variable (CLK period)	2 MHz	forced	0-0.5	0-0.5	0-0.5	µs
Variable (CLK period)	25 MHz		0-0.04	0-0.04	0-0.04	µs

Table 3. Typical Counter/Delay Offset Measurements

Parameter	RC OSC Freq	RC OSC Power	V_{DD} = 1.8 V	V_{DD} = 3.3V	V_{DD} = 5.0V	Unit
Tpd (non-delayed edge)	25 kHz/ 2 MHz	either	35	14	10	ns

5.10 Expected Delays and Widths

Table 4. Expected Delays and Widths (typical)

Symbol	Parameter	Note	V_{DD} = 1.8 V	V_{DD} = 3.3V	V_{DD} = 5.0V	Unit
Width	Width, 1 cell	mode:(any)edge detect, edge detect output	296	135	101	ns
Width	Width, 2 cell	mode:(any)edge detect, edge detect output	597	272	203	ns
Width	Width, 3 cell	mode:(any)edge detect, edge detect output	898	410	305	ns
Width	Width, 4 cell	mode:(any)edge detect, edge detect output	1195	546	407	ns
time1	Delay, 1 cell	mode:(any)edge detect, edge detect output	55	24	18	ns
time1	Delay, 2 cell	mode:(any)edge detect, edge detect output	55	24	18	ns
time1	Delay, 3 cell	mode:(any)edge detect, edge detect output	55	24	18	ns
time1	Delay, 4 cell	mode:(any)edge detect, edge detect output	55	24	18	ns
time2	Delay, 1 cell	mode: both edge delay, edge detect output	367	165	106	ns
time2	Delay, 2 cell	mode: both edge delay, edge detect output	667	300	193	ns
time2	Delay, 3 cell	mode: both edge delay, edge detect output	968	440	279	ns
time2	Delay, 4 cell	mode: both edge delay, edge detect output	1265	575	365	ns

5.11 Typical Pulse Width Performance

Table 5. Typical Pulse Width Performance at T=25°C

Parameter	V_{DD} = 1.8 V	V_{DD} = 3.3V	V_{DD} = 5.0V	Unit
Filtered Pulse Width for Filter 0	< 114	< 47	< 30	ns
Filtered Pulse Width for Filter 1	<75	<30	<19	ns

5.12 OSC Specifications

Table 6. 25 kHz RC OSC0 frequency limits

Power Supply Range (VDD) V	Temperature Range					
	+25 °C		0 °C ... +85 °C		-40 °C ... +85 °C	
	Minimum Value, kHz	Maximum Value, kHz	Minimum Value, kHz	Maximum Value, kHz	Minimum Value, kHz	Maximum Value, kHz
1.8 V ±5%	24.240	25.781	21.963	27.188	21.963	27.562
3.3 V ±10%	24.447	25.556	21.905	27.221	21.905	27.263
5 V ±10%	24.315	25.911	22.045	27.099	22.045	27.422
2.5 V ... 4.5 V	24.398	25.576	21.897	27.221	21.897	27.277
1.71 V… 5.5 V	24.089	26.128	21.897	27.373	21.897	27.613

Table 7. 25 kHz RC OSC0 frequency error (error calculated relative to nominal value)

Power Supply Range (VDD) V	Temperature Range					
	+25 °C		0 °C ... +85 °C		-40 °C ... +85 °C	
	Error (% at Minimum)	Error (% at Maximum)	Error (% at Minimum)	Error (% at Maximum)	Error (% at Minimum)	Error (% at Maximum)
1.8 V ±5%	-2.76%	3.42%	-11.89%	9.07%	-11.89%	10.57%
3.3 V ±10%	-2.01%	2.43%	-12.20%	9.11%	-12.20%	9.28%
5 V ±10%	-2.51%	3.89%	-11.61%	8.65%	-11.61%	9.95%
2.5 V ... 4.5 V	-2.21%	2.52%	-12.23%	9.11%	-12.23%	9.33%
1.71 V… 5.5 V	-3.44%	4.73%	-12.23%	9.72%	-12.23%	10.68%

5.12.1 2 MHz RC Oscillator

Table 8. 2 MHz RC OSC0 frequency limits

Power Supply Range (VDD) V	Temperature Range					
	+25 °C		0 °C ... +85 °C		-40 °C ... +85 °C	
	Minimum Value, MHz	Maximum Value, MHz	Minimum Value, MHz	Maximum Value, MHz	Minimum Value, MHz	Maximum Value, MHz
1.8 V ±5%	1.932	2.058	1.793	2.171	1.793	2.171
3.3 V ±10%	1.932	2.099	1.808	2.204	1.808	2.204
5 V ±10%	1.981	2.194	1.759	2.316	1.759	2.316
2.5 V ... 4.5 V	1.920	2.120	1.800	2.214	1.800	2.214
1.71 V… 5.5 V	1.811	2.288	1.710	2.337	1.710	2.361

Table 9. 2 MHz RC OSC0 frequency error (error calculated relative to nominal value)

Power Supply Range (VDD) V	Temperature Range					
	+25 °C		0 °C ... +85 °C		-40 °C ... +85 °C	
	Error (% at Minimum)	Error (% at Maximum)	Error (% at Minimum)	Error (% at Maximum)	Error (% at Minimum)	Error (% at Maximum)
1.8 V ±5%	-3.23%	3.10%	-10.21%	8.73%	-10.21%	8.73%
3.3 V ±10%	-3.40%	4.94%	-9.60%	10.19%	-9.60%	10.19%
5 V ±10%	-5.44%	9.70%	-12.03%	2.32%	-12.03%	15.81%
2.5 V ... 4.5 V	-4.00%	5.98%	-9.99%	10.68%	-9.99%	10.68%
1.71 V… 5.5 V	-9.46%	14.42%	-14.48%	16.85%	-14.48%	18.05%

5.12.2 25 MHz RC Oscillator

Table 10. 25 MHz RC OSC1 frequency limits

Power Supply Range (VDD) V	Temperature Range					
	+25 °C		0 °C ... +85 °C		-40 °C ... +85 °C	
	Minimum Value, MHz	Maximum Value, MHz	Minimum Value, MHz	Maximum Value, MHz	Minimum Value, MHz	Maximum Value, MHz
2.5 V ±10%	22.344	27.023	21.687	27.777	21.687	27.706
3.3 V ±10%	22.412	26.290	21.399	26.595	21.399	27.069
5 V ±10%	23.049	26.646	21.900	27.220	21.900	27.647
2.5 V ... 4.5 V	21.511	26.290	20.738	26.685	20.738	27.123
1.71 V… 5.5 V (See Note1)	13.290	26.290	12.770	26.685	11.908	27.123

Table 11. 25 MHz RC OSC1 frequency error (error calculated relative to nominal value)

Power Supply Range (VDD) V	Temperature Range					
	+25 °C		0 °C ... +85 °C		-40 °C ... +85 °C	
	Error (% at Minimum)	Error (% at Maximum)	Error (% at Minimum)	Error (% at Maximum)	Error (% at Minimum)	Error (% at Maximum)
2.5 V ±10%	-10.37%	8.40%	-13.00%	9.42%	-13.00%	11.14%
3.3 V ±10%	-11.10%	4.28%	-15.12%	5.49%	-15.12%	7.37%
5 V ±10%	-9.80%	4.27%	-14.30%	6.52%	-14.30%	8.19%
2.5 V ... 4.5 V	-14.68%	4.28%	-17.74%	5.85%	-17.74%	7.58%
1.71 V… 5.5 V (See Note1)	-47.29%	4.28%	-49.35%	5.85%	-52.77%	7.58%

Note 1: Operating 25 MHz RC OSC1 is not recommended at VDD < 2.5 V.

5.12.3 OSC Power On delay

Table 12. Oscillators Power On delay at room temperature, DLY/CNT Counter data = 100; RC OSC power setting: "Auto Power On", RC osc clock to matrix input: "Enable"

Power Supply Range (VDD) V	RC OSC0 2 MHz		RC OSC0 25 kHz		RC OSC1	
	Typical Value, µs	Maximum Value, µs	Typical Value, ms	Maximum Value, ms	Typical Value, µs	Maximum Value, µs
1.71	368.7	402.3	16.26	17.87	114.4	134.8
1.80	347.0	375.4	15.93	17.79	104.9	122.0
1.89	329.4	354.2	15.58	17.67	96.5	111.5
2.50	278.4	295.2	14.08	16.75	72.0	80.3
2.70	263.2	277.8	13.20	16.21	65.0	71.4
3.00	251.6	264.9	8.38	9.11	60.0	65.1
3.30	238.3	250.6	1.64	2.02	55.2	58.7
3.60	228.3	240.0	1.57	1.92	51.7	55.0
4.20	220.3	231.7	1.55	1.93	49.1	51.9
4.50	208.0	219.2	1.55	2.01	45.5	47.8
5.00	203.0	213.9	1.56	2.01	44.3	46.5
5.50	195.7	206.5	1.58	2.07	43.0	44.8

Table 13. Oscillators Power On delay at room temperature, DLY/CNT Counter data = 100; RC OSC power setting: "Auto Power On", RC osc clock to matrix input: "Enable", Fast Start-up Time Mode

Power Supply Range (VDD) V	RC OSC0 2 MHz		RC OSC0 25 kHz	
	Typical Value, µs	Maximum Value, µs	Typical Value, ms	Maximum Value, ms
1.71	741.8	924.7	20.78	21.36
1.80	703.9	861.5	20.80	21.26
1.89	672.5	809.0	20.81	21.42
2.50	578.5	651.8	20.84	21.40
2.70	546.8	592.8	20.88	21.42
3.00	520.6	549.2	20.93	21.63
3.30	490.4	515.8	21.00	21.65
3.60	468.9	504.7	21.09	21.75
4.20	453.0	496.6	21.18	21.98
4.50	430.1	478.2	21.36	22.34
5.00	420.7	468.5	21.39	22.34
5.50	406.1	451.9	21.38	22.34

5.13 ACMP Specifications

Table 14. ACMP Specifications

Symbol	Parameter	Description/Note	Conditions	Min.	Typ.	Max.	Unit
V_{ACMP}	ACMP Input Voltage Range	Positive Input	VDD = 1.8 V ± 5 %	0	--	V_{DD}	V
		Negative Input		0	--	1.2	V
		Positive Input	VDD = 3.3 V ± 10 %	0	--	V_{DD}	V
		Negative Input		0	--	1.2	V
		Positive Input	VDD = 5.0 V ± 10 %	0	--	V_{DD}	V
		Negative Input		0	--	1.2	V
V_{offset}	ACMP Input Offset Voltage	Low Bandwidth - Enable, Vhys = 0 mV, Gain = 1, Vref = (50..1200) mV, VDD = (1.71..5.5) V	T = 25°C	-9.1	--	8.4	mV
			T = (-40..85)°C	-10.9	--	10.9	mV
		Low Bandwidth - Disable, Vhys = 0 mV, Gain =1, Vref = (50..1200) mV, VDD = (1.71..5.5) V	T = 25°C	-7.5	--	7.2	mV
			T = (-40..85)°C	-10.7	--	10.5	mV
t_{start}	ACMP Start Time	ACMP Power On delay, Minimal required wake time for the "Wake and Sleep function", Regulator and Charge Pump set to automatic ON/OFF	BG = 550 µs, T = 25°C VDD = (1.71..5.5) V	--	609.7	862.2	µS
			BG = 550 µs, T = (-40..85)°C VDD = (1.71..5.5) V	--	675.0	1028.8	µS
			BG = 100 µs, T = 25°C VDD = 2.7..5.5 V	--	132.4	176.2	µS
			BG = 100 µs, T = (-40..85)°C VDD = 2.7..5.5 V	--	149.4	213.5	µS
		ACMP Power On delay, Minimal required wake time for the "Wake and Sleep function", Regulator and Charge Pump always OFF	BG = 550 µs, T = 25°C VDD = (3..5.5) V	--	609.5	862.0	µS
			BG = 550 µs, T = (-40..85)°C VDD = (3..5.5) V	--	674.6	1027.5	µS
			BG = 100 µs, T = 25°C VDD = 3..5.5 V	--	131.6	176.0	µS
			BG = 100 µs, T = (-40..85)°C VDD = 3..5.5 V	--	149.2	213.3	µS

Symbol	Parameter	Description/Note	Conditions	Min.	Typ.	Max.	Unit
V_{HYS}	Built-in Hysteresis	V_{HYS} = 25 mV V_{IL} = Vin - V_{HYS}/2 V_{IH} = Vin + V_{HYS}/2	LB - Enabled, T = 25°C	7.32	--	35.5	mV
			LB - Disabled, T = 25°C	10.0	--	38.5	mV
		V_{HYS} = 50 mV V_{IL} = Vin - V_{HYS} V_{IH} = V_{HYS}	LB - Enabled, T = 25°C	42.9	--	57.8	mV
			LB - Disabled, T = 25°C	44.2	--	54.3	mV
		V_{HYS} = 200 mV V_{IL} = Vin - V_{HYS} V_{IH} = V_{HYS}	LB - Enabled, T = 25°C	192.7	--	208.7	mV
			LB - Disabled, T = 25°C	193.3	--	204.8	mV
		V_{HYS} = 25 mV V_{IL} = Vin - V_{HYS}/2 V_{IH} = Vin + V_{HYS}/2	LB - Enabled, T = (-40…+85)°C	0.0	--	58.0	mV
			LB - Disabled, T = (-40…+85)°C	0.0	--	52.9	mV
		V_{HYS} = 50 mV V_{IL} = Vin - V_{HYS} V_{IH} = V_{HYS}	LB - Enabled, T = (-40…+85)°C	22.5	--	86.9	mV
			LB - Disabled, T = (-40…+85)°C	29.2	--	76.5	mV
		V_{HYS} = 200 mV V_{IL} = Vin - V_{HYS} V_{IH} = V_{HYS}	LB - Enabled, T = (-40…+85)°C	157.1	--	251.6	mV
			LB - Disabled, T = (-40…+85)°C	160.2	--	245.3	mV
R_{sin}	Series Input Resistance	Gain = 1x		--	100.0	--	MΩ
		Gain = 0.5x		--	1.0	--	MΩ
		Gain = 0.33x		--	0.8	--	MΩ
		Gain = 0.25x		--	1.0	--	MΩ
PROP	Propagation Delay, Response Time	Low Bandwidth - Enable, Gain = 1, VDD=(1.71..3.3)V, Overdrive=5 mV	Low to High, T = (-40…+85)°C	--	103.93	1853.68	µS
			High to Low, T = (-40…+85)°C	--	101.06	1656.70	µS
		Low Bandwidth - Disable, Gain = 1, VDD=(1.71..3.3)V, Overdrive=5 mV	Low to High, T = (-40…+85)°C	--	68.29	1753.33	µS
			High to Low, T = (-40…+85)°C	--	63.06	1568.55	µS
		Low Bandwidth - Enable, Gain = 1, VDD=(3.3..5.5)V, Overdrive=5 mV	Low to High, T = (-40…+85)°C	--	30.62	167.56	µS
			High to Low, T = (-40…+85)°C	--	33.54	181.40	µS
		Low Bandwidth - Disable, Gain = 1, VDD=(3.3..5.5)V, Overdrive=5 mV	Low to High, T = (-40…+85)°C	--	5.00	32.61	µS
			High to Low, T = (-40…+85)°C	--	5.24	33.88	µS

Symbol	Parameter	Description/Note	Conditions	Min.	Typ.	Max.	Unit
G	Gain error (including threshold and internal Vref error), T = (-40…+85)°C	G = 1, VDD = 1.71 V	Vref = 50…1200 mV	--	1	--	
		G = 1, VDD = 3.3 V		--	1	--	
		G = 1, VDD = 5.5 V		--	1	--	
		G = 0.5, VDD = 1.71 V		-1.00%	--	0.93%	
		G = 0.5, VDD = 3.3 V		-0.96%	--	0.82%	
		G = 0.5, VDD = 5.5 V		-1.04%	--	0.90%	
		G = 0.33, VDD = 1.71V		-1.75%	--	2.10%	
		G = 0.33, VDD = 3.3 V		-1.95%	--	1.69%	
		G = 0.33, VDD = 5.5 V		-2.03%	--	1.77%	
		G = 0.25, VDD = 1.71V		-1.91%	--	2.13%	
		G = 0.25, VDD = 3.3 V		-1.98%	--	1.80%	
		G = 0.25, VDD = 5.5 V		-2.12%	--	1.90%	
Vref	Internal Vref error, Vref = 1200 mV	VDD = 1.8 V ± 5 %	T = 25°C	-0.58%	--	0.56%	
			T = (-40…+85)°C	-1.01%	--	0.70%	
		VDD = 3.3 V ± 10 %	T = 25°C	-0.59%	--	0.58%	
			T = (-40…+85)°C	-1.06%	--	0.72%	
		VDD = 5.0 V ± 10 %	T = 25°C	-0.64%	--	0.60%	
			T = (-40…+85)°C	-1.16%	--	0.74%	
	Internal Vref error, Vref = 1000 mV	VDD = 1.8 V ± 5 %	T = 25°C	-0.57%	--	0.58%	
			T = (-40…+85)°C	-1.14%	--	0.76%	
		VDD = 3.3 V ± 10 %	T = 25°C	-0.59%	--	0.58%	
			T = (-40…+85)°C	-1.04%	--	0.73%	
		VDD = 5.0 V ± 10 %	T = 25°C	-0.67%	--	0.64%	
			T = (-40…+85)°C	-1.15%	--	0.73%	
	Internal Vref error, Vref = 500 mV	VDD = 1.8 V ± 5 %	T = 25°C	-0.64%	--	0.64%	
			T = (-40…+85)°C	-1.11%	--	0.75%	
		VDD = 3.3 V ± 10 %	T = 25°C	-0.63%	--	0.63%	
			T = (-40…+85)°C	-1.10%	--	0.78%	
		VDD = 5.0 V ± 10 %	T = 25°C	-0.72%	--	0.70%	
			T = (-40…+85)°C	-1.15%	--	0.80%	

6.0 Summary of Macrocell Function

6.1 I/O Pins

- Digital Input (low voltage or normal voltage, with or without Schmitt Trigger)
- Open Drain Outputs
- Push Pull Outputs
- Analog I/O
- 10 kΩ/100 kΩ/1 MΩ pull-up/pull-down resistors
- 40 mA Open Drain 4X Drive output

6.2 Connection Matrix

- Digital matrix for circuit connections based on user design

6.3 Analog Comparators (3 total)

- Selectable hysteresis 0 mV / 25 mV / 50 mV / 200 mV
- Wake and Sleep Control (Part of Combination Function Macrocell)

6.4 Voltage Reference

- Used for references on Analog Comparators

6.5 Combination Function Macrocells (19 total)

- Three Selectable DFF/Latch or 2-bit LUTs
- Five Selectable DFF/Latch or 3-bit LUTs
- One Selectable Pipe Delay or 3-bit LUT
- One Selectable Programmable Pattern Generator or 2-bit LUT
- Five Selectable 8-bit CNT/DLY or 3-bit LUT
- Two Selectable 16-bit CNT/DLY or 4-bit LUT or Wake and Sleep Controller
- Two Deglitch Filters with Edge Detectors

6.6 Asynchronous State Machine

  - Eight States
  - Flexible input logic from state transitions

6.7 Serial Communications

- I^2C Protocol compliant

6.8 Pipe Delay (Part of Combination Function Macrocell)

- 16 stage / 3 output
- One 1 stage fixed output
- Two 1-16 stage selectable outputs

6.9 Programmable Delay

- 125 ns/250 ns/375 ns/500 ns @ 3.3 V
- Includes Edge Detection function

6.10 RC Oscillator

- 25 kHz and 2 MHz selectable frequency
- 25 MHz RC Oscillator
- First stage divider (4): OSC/1, OSC/2, OSC/4, and OSC/8
- Second stage divider for 25 kHz and 2 MHz (5): Output to Matrix: OSC/1, OSC/2, OSC/3, OSC/4, OSC/8, OSC/12, OSC/24, OSC/64

6.11 Crystal Oscillator

6.12 Eight byte RAM + OTP User Memory

- RAM Memory space that is readable and writable via I^2C

7.0 I/O Pins

The SLG46534 has a total of 12 multi-function I/O pins which can function as either a user defined Input or Output, as well as serving as a special function, or serving as a signal for programming of the on-chip Non Volatile Memory (NVM).

Refer to Section *2.0 Pin Description* for normal and programming modepin definitions.

Normal Mode pin definitions are as follows:

- Pin 1: V_{DD} power supply
- Pin 2: general purpose input
- Pin 3: general purpose input or output
- Pin 4: general purpose input or output or analog comparator 0(+)
- Pin 5: general purpose input or output with OE or analog comparator 0(-)
- Pin 6: general purpose input or OD output SCL
- Pin 7: general purpose input or OD output SDA
- Pin 8: general purpose input or output with OE or analog comparator 1(+)
- Pin 9: ground
- Pin 10: general purpose input or output or analog comparator 0/1/2(-)
- Pin 11: general purpose input or output with OE
- Pin 12: general purpose input or output with OE
- Pin 13: general purpose input or output or external clock input for OSC0 25 kHz/2 MHz
- Pin 14: general purpose input or output or external clock input for OSC1 25 MHz

Programming Mode pin definitions are as follows:

- Pin 1: V_{DD} power supply
- Pin 2: V_{PP} programming voltage
- Pin 6: Programming SCL
- Pin 7: Programming SDA
- Pin 9: ground
- Pin 12: programming mode control

Of the 12 user defined I/O pins on the SLG46534, all but one of the pins (Pin 2) can serve as both digital input and digital output. Pin 2 can only serve as a digital input pin.

7.1 Input Modes

Each I/O pin can be configured as a digital input pin with/without buffered Schmitt Trigger, or can also be configured as a low voltage digital input. Pins 4, 5, 8 and10 can also be configured to serve as analog inputs to the on-chip comparators.

7.2 Output Modes

Pins 3, 4, 5, 6, 7, 8, 10, 11, 12, 13 and 14 can all be configured as digital output pins.

7.3 Pull Up/Down Resistors

All I/O pins have the option for user selectable resistors connected to the input structure. The selectable values on these resistors are 10 kΩ, 100 kΩ and 1 MΩ. In the case of Pin 2, the resistors are fixed to a pull-down configuration. In the case of all other I/O pins, the internal resistors can be configured as either pull-up or pull-downs.

7.4 I/O Register Settings

7.4.1 PIN 2 Register Settings PIN 4 Register Settings PIN 6 Register Settings

Table 15. PIN 2 Register Settings

Signal Function	Register Bit Address	Register Definition
PIN 2 Pull Down Resistor Value Selection	<1029:1028>	00: Floating 01: 10 kΩ Resistor 10: 100 kΩ Resistor 11: 1 MΩ Resistor
PIN 2 Mode Control	<1031:1030>	00: Digital Input without Schmitt Trigger 01: Digital Input with Schmitt Trigger 10: Low Voltage Digital Input 11: Reserved

Table 16. PIN 3 Register Settings

Signal Function	Register Bit Address	Register Definition
PIN 3 Driver Strength Selection	<1041>	0: 1X 1: 2X
PIN 3 Pull Up/Down Resistor Selection	<1042>	0: Pull Down Resistor 1: Pull Up Resistor
PIN 3 Pull Up/Down Resistor Value Selection	<1044:1043>	00: Floating 01: 10 kΩ Resistor 10: 100 kΩ Resistor 11: 1 MΩ Resistor
PIN 3 Mode Control	<1047:1045>	000: Digital Input without Schmitt Trigger 001: Digital Input with Schmitt Trigger 010: Low Voltage Digital Input 011: Reserved 100: Push Pull 101: Open Drain NMOS 110: Open Drain PMOS 111: Reserved

Table 17. PIN 4 Register Settings

Signal Function	Register Bit Address	Register Definition
PIN 4 Driver Strength Selection	<1057>	0: 1X 1: 2X
PIN 4 Pull Up/Down Resistor Selection	<1058>	0: Pull Down Resistor 1: Pull Up Resistor
PIN 4 Pull Up/Down Resistor Value Selection	<1060:1059>	00: Floating 01: 10 kΩ Resistor 10: 100 kΩ Resistor 11: 1 MΩ Resistor
PIN 4 Mode Control	<1063:1061>	000: Digital Input without Schmitt Trigger 001: Digital Input with Schmitt Trigger 010: Low Voltage Digital Input 011: Analog Input/Output 100: Push Pull 101: Open Drain NMOS 110: Open Drain PMOS 111: Analog Input & Open Drain

7.4.2 PIN 5 Register Settings

Table 18. PIN 5 Register Settings

Signal Function	Register Bit Address	Register Definition
PIN 5 Pull Up/Down Resistor Selection	<1065>	0: Pull Down Resistor 1: Pull Up Resistor
PIN 5 Pull Up/Down Resistor Value Selection	<1067:1066>	00: Floating 01: 10 kΩ Resistor 10: 100 kΩ Resistor 11: 1 MΩ Resistor
PIN 5 Mode Control (sig_pin5_oe =0)	<1069:1068>	00: Digital Input without Schmitt Trigger 01: Digital Input with Schmitt Trigger 10: Low Voltage Digital Input 11: Analog Input/Output
PIN 5 Mode Control (sig_pin5_oe =1)	<1071:1070>	00: Push Pull 1X 01: Push Pull 2X 10: Open Drain NMOS 1X 11: Open Drain NMOS 2X

7.4.3 PIN 6 Register Settings

Table 19. PIN 6 Register Settings

Signal Function	Register Bit Address	Register Definition
PIN 6 Driver Strength Selection	<1073>	0: 1X 1: 2X
Select SCL & Virtual Input 0 or PIN6	<1074>	0: SCL & Virtual Input 0 1: PIN6
PIN 6 Pull Down Resistor Value Selection	<1076:1075>	00: Floating 01: 10 kΩ Resistor 10: 100 kΩ Resistor 11: 1 MΩ Resistor
PIN 6 Mode Control	<1079:1077>	000: Digital Input without Schmitt Trigger 001: Digital Input with Schmitt Trigger 010: Low Voltage Digital Input 011: Reserved 100: Reserved 101: Open Drain NMOS 110: Reserved 111: Reserved

7.4.4 PIN 7 Register Settings

Table 20. PIN 7 Register Settings

Signal Function	Register Bit Address	Register Definition
PIN 7 (or SDA) Driver Strength Selection	<1081>	0: 1X 1: 2X
Select SDA & Virtual Input 1 or PIN7	<1082>	0: SDA & Virtual Input 1 1: PIN7
PIN 7 Pull Down Resistor Value Selection	<1084:1083>	00: Floating 01: 10 kΩ Resistor 10: 100 kΩ Resistor 11: 1 MΩ Resistor
PIN 7(or SDA) Mode Control	<1087:1085>	000: Digital Input without Schmitt Trigger 001: Digital Input with Schmitt Trigger 010: Low Voltage Digital Input 011: Reserved 100: Reserved 101: Open Drain NMOS 110: Reserved 111: Reserved

7.4.5 PIN 8 Register Settings

Table 21. PIN 8 Register Settings

Signal Function	Register Bit Address	Register Definition
PIN 8 4X Drive (4X, NMOS Open Drain) Selection	<1088>	0: 4X Drive Off 1: 4X Drive On (sig_pin8_oe=1 & reg <1095:1094> = 1x)
PIN 8 Pull Up/Down Resistor Selection	<1089>	0: Pull Down Resistor 1: Pull Up Resistor
PIN 8 Pull Up/Down Resistor Value Selection	<1091:1090>	00: Floating 01: 10 kΩ Resistor 10: 100 kΩ Resistor 11: 1 MΩ Resistor
PIN 8 Mode Control (sig_pin8_oe =0)	<1093:1092>	00: Digital Input without Schmitt Trigger 01: Digital Input with Schmitt Trigger 10: Low Voltage Digital Input 11: Analog Input/Output
PIN 8 Mode Control (sig_pin8_oe =1)	<1095:1094>	00: Push Pull 1X 01: Push Pull 2X 10: Open Drain NMOS 1X 11: Open Drain NMOS 2X

7.4.6 PIN 10 Register Settings

Table 22. PIN 10 Register Settings

Signal Function	Register Bit Address	Register Definition
PIN 10 4X Drive (4X, NMOS Open Drain) Selection	<1096>	0: 4X Drive Off 1: 4X Drive On (reg <1095:1094> = 1x)
PIN 10 Driver Strength Selection	<1097>	0: 1X 1: 2X
PIN 10 Pull Up/Down Resistor Selection	<1098>	0: Pull Down Resistor 1: Pull Up Resistor
PIN 10 Pull Up/Down Resistor Value Selection	<1100:1099>	00: Floating 01: 10 kΩ Resistor 10: 100 kΩ Resistor 11: 1 MΩ Resistor
PIN 10 Mode Control	<1103:1101>	000: Digital Input without Schmitt Trigger 001: Digital Input with Schmitt Trigger 010: Low Voltage Digital Input 011: Analog Input/Output 100: Push Pull 101: Open Drain NMOS 110: Open Drain PMOS 111: Analog Input & Open Drain

7.4.7 PIN 11 Register Settings

Table 23. PIN 11 Register Settings

Signal Function	Register Bit Address	Register Definition
PIN 11 Pull Up/Down Resistor Selection	<1113>	0: Pull Down Resistor 1: Pull Up Resistor
PIN 11 Pull Up/Down Resistor Value Selection	<1115:1114>	00: Floating 01: 10 kΩ Resistor 10: 100 kΩ Resistor 11: 1 MΩ Resistor
PIN 11 Mode Control (sig_pin11_oe =0)	<1117:1116>	00: Digital Input without Schmitt Trigger 01: Digital Input with Schmitt Trigger 10: Low Voltage Digital Input 11: Reserved
PIN 11 Mode Control (sig_pin11_oe =1)	<1119:1118>	00: Push Pull 1X 01: Push Pull 2X 10: Reserved 11: Reserved

7.4.8 PIN 12 Register Settings

Table 24. PIN 12 Register Settings

Signal Function	Register Bit Address	Register Definition
PIN 12 Pull Up/Down Resistor Selection	<1129>	0: Pull Down Resistor 1: Pull Up Resistor
PIN 12 Pull Up/Down Resistor Value Selection	<1131:1130>	00: Floating 01: 10 kΩ Resistor 10: 100 kΩ Resistor 11: 1 MΩ Resistor
PIN 12 Mode Control (sig_pin12_oe =1)	<1135:1134>	00: Push Pull 1X 01: Push Pull 2X 10: Open Drain NMOS 1X 11: Open Drain NMOS 2X
PIN 12 Mode Control (sig_pin12_oe =0)	<1133:1132>	00: Digital Input without Schmitt Trigger 01: Digital Input with Schmitt Trigger 10: Low Voltage Digital Input 11: Reserved

7.4.9 PIN 13 Register Settings

Table 25. PIN 13 Register Settings

Signal Function	Register Bit Address	Register Definition
PIN 13 Driver Strength Selection	<1137>	0: 1X 1: 2X
PIN 13 Pull Up/Down Resistor Selection	<1138>	0: Pull Down Resistor 1: Pull Up Resistor
PIN 13 Pull Up/Down Resistor Value Selection	<1140:1139>	00: Floating 01: 10 kΩ Resistor 10: 100 kΩ Resistor 11: 1 MΩ Resistor
PIN 13 Mode Control	<1143:1141>	000: Digital Input without Schmitt Trigger 001: Digital Input with Schmitt Trigger 010: Low Voltage Digital Input 011: Reserved 100: Push Pull 101: Open Drain NMOS 110: Open Drain PMOS 111: Reserved

7.4.10 PIN 14 Register Settings

Table 26. PIN 14 Register Settings

Signal Function	Register Bit Address	Register Definition
PIN 14 Driver Strength Selection	<1161>	0: 1X 1: 2X
PIN 14 Pull Up/Down Resistor Selection	<1162>	0: Pull Down Resistor 1: Pull Up Resistor
PIN 14 Pull Up/Down Resistor Value Selection	<1164:1163>	00: Floating 01: 10 kΩ Resistor 10: 100 kΩ Resistor 11: 1 MΩ Resistor
PIN 14 Mode Control	<1167:1165>	000: Digital Input without Schmitt Trigger 001: Digital Input with Schmitt Trigger 010: Low Voltage Digital Input 011: Reserved 100: Push Pull 101: Open Drain NMOS 110: Open Drain PMOS 111: Reserved

7.5 GPI Structure

7.5.1 GPI Structure (for Pin 2)

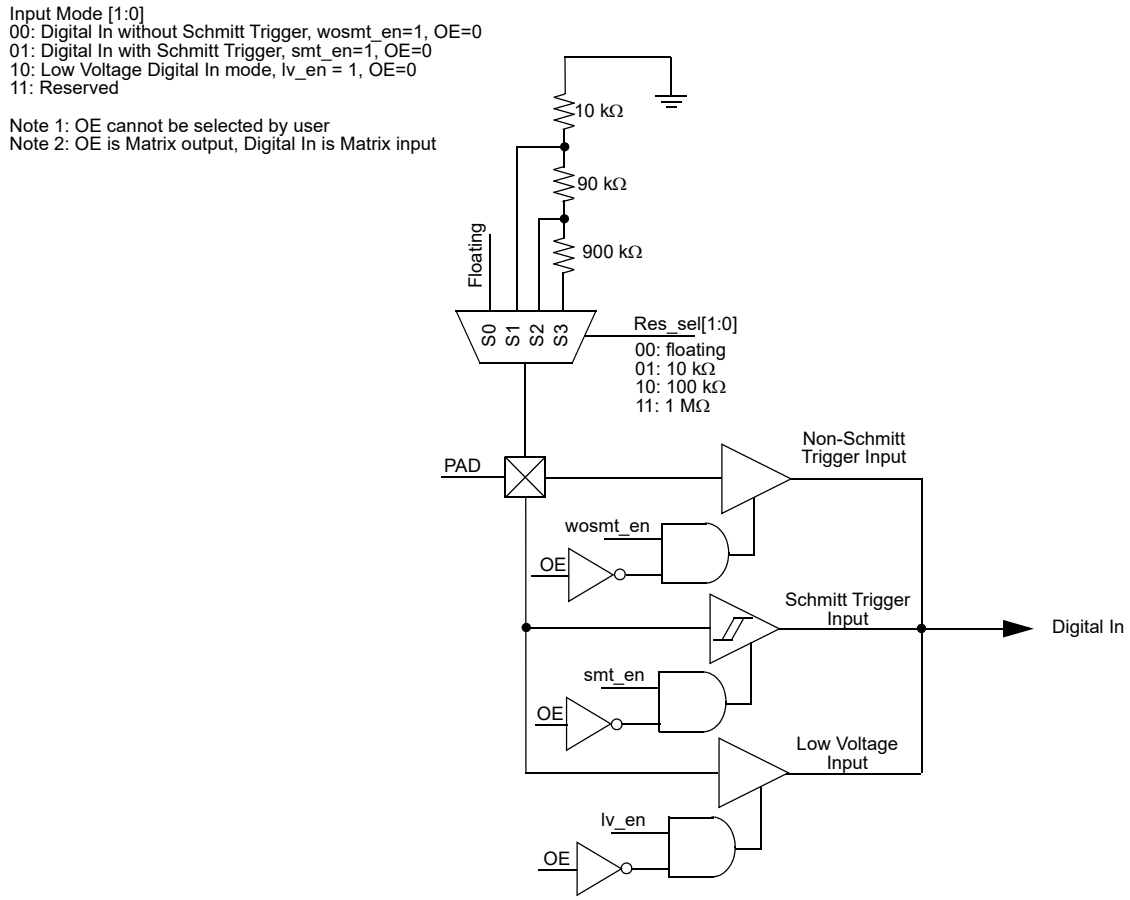

Figure 2. PIN 2 GPI Structure Diagram

7.6 Matrix OE IO Structure

7.6.1 Matrix OE IO Structure (for Pins 5, 11, 12)

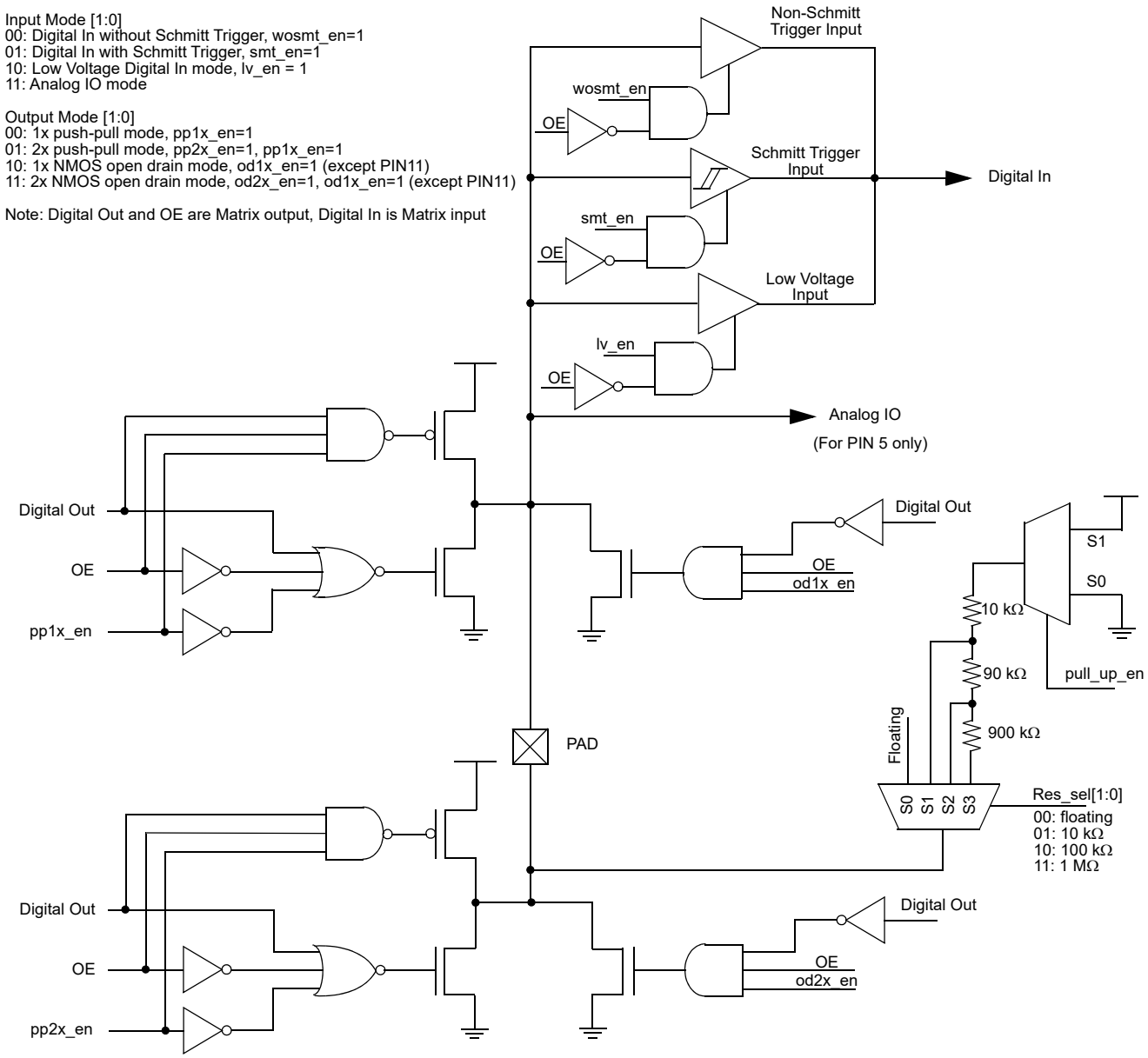

Figure 3. Matrix OE IO Structure Diagram

7.6.2 Matrix OE IO Structure (for Pins 6 and 7)

Pin 6, Pin 7Mode [2:0]
000: Digital Input without Schmitt Trigger
001: Digital Input with Schmitt Trigger
010: Low Voltage Digital Input
011: Reserved
100: Reserved
101: Open Drain NMOS
110: Reserved
111: Reserved

Note: Digital Out and OE are Matrix output, Digital In is Matrix input

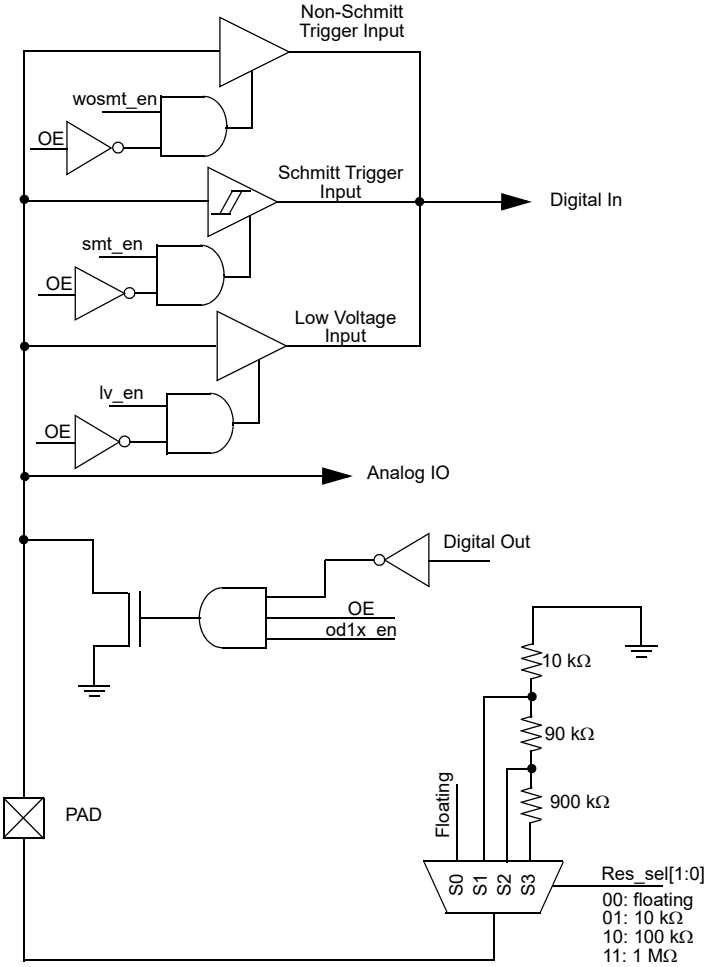

Figure 4. Matrix OE IO Structure Diagram

7.6.3 Matrix OE 4X Drive Structure (for Pin 8)

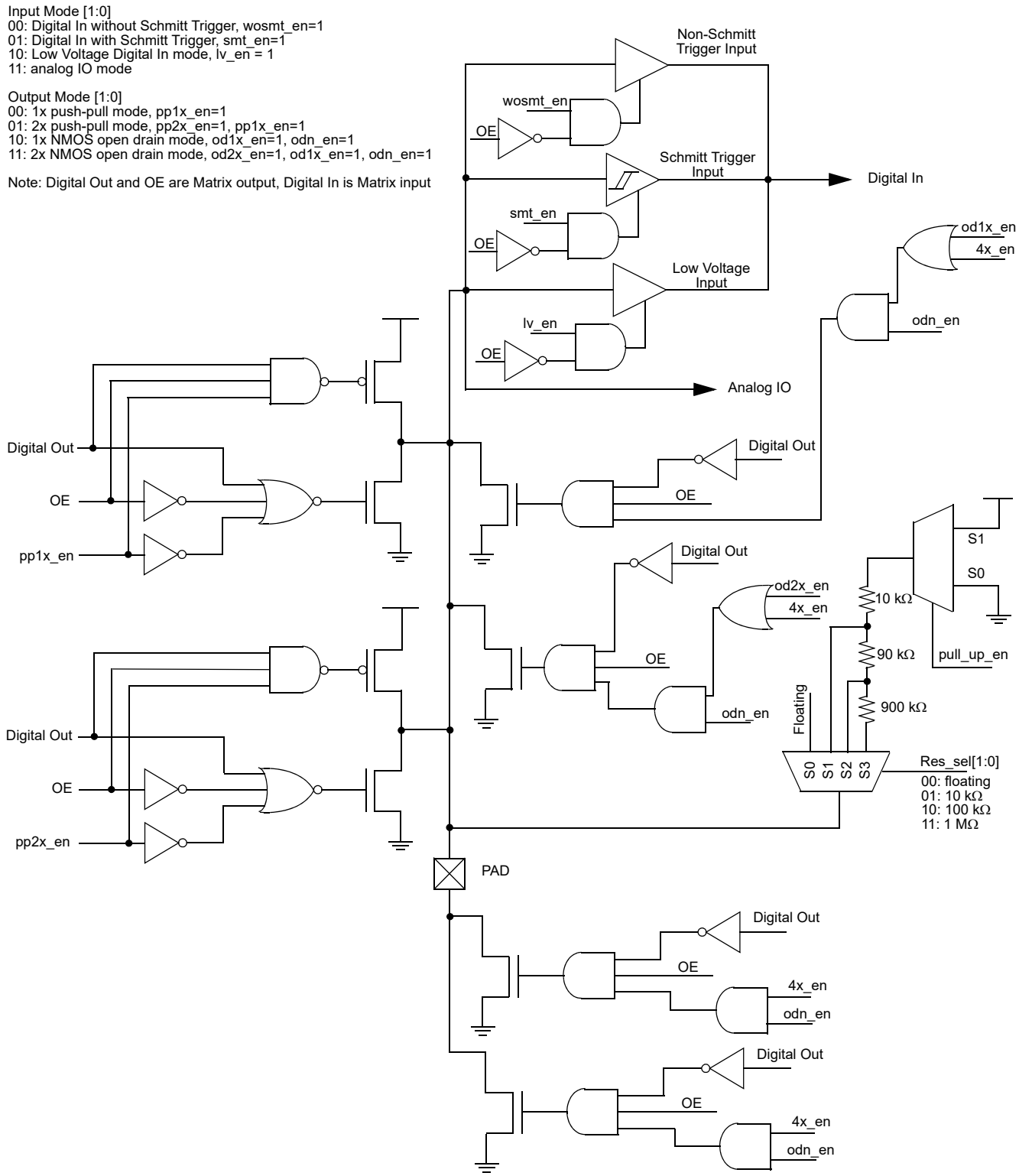

Figure 5. Matrix OE IO 4X Drive Structure Diagram

7.6.4 4X Drive Structure (for Pin 10)

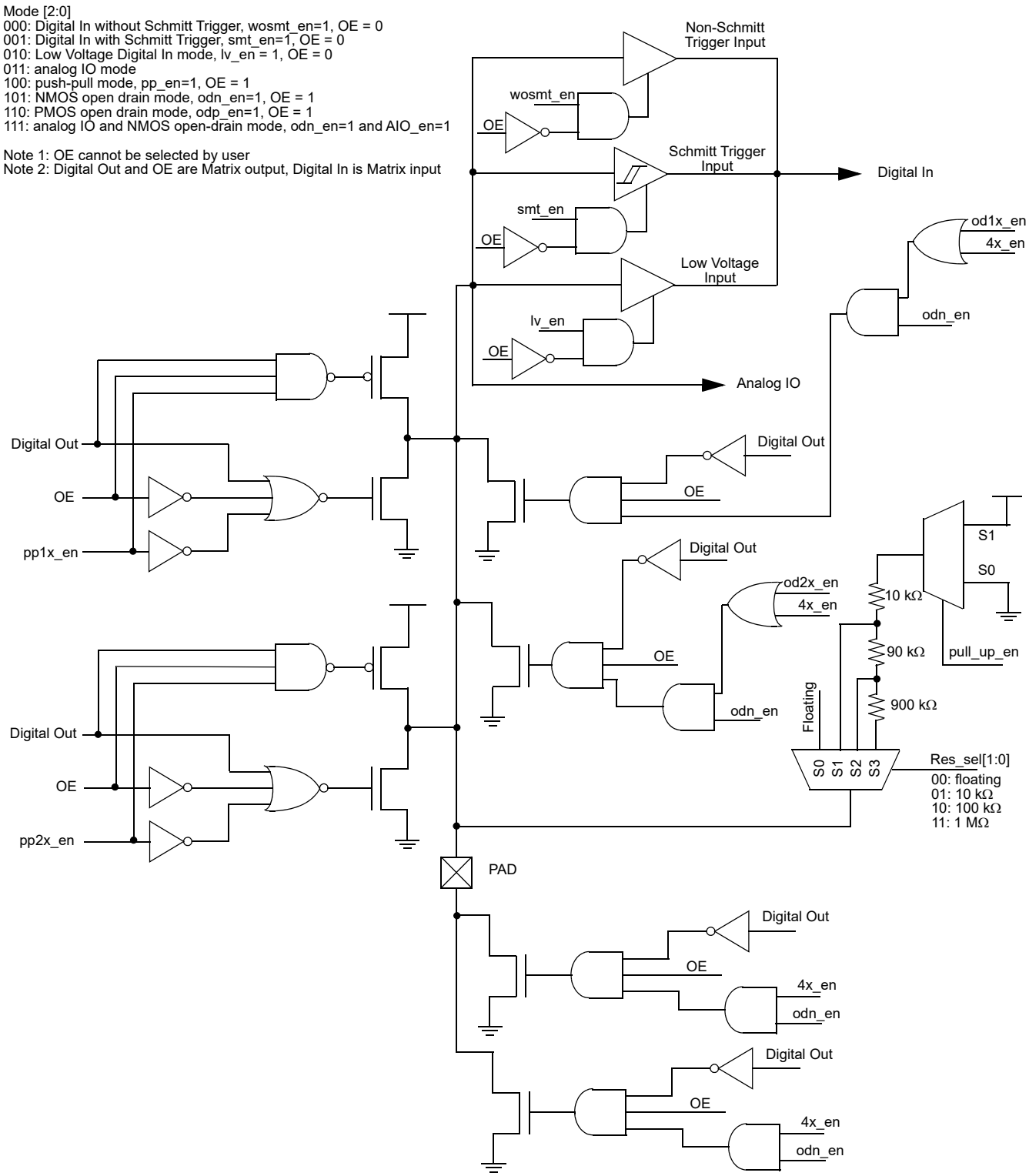

Figure 6. IO 4X Drive Structure Diagram

7.7 IO Structure

7.7.1 IO Structure (for Pins 3, 4, 13, 14)

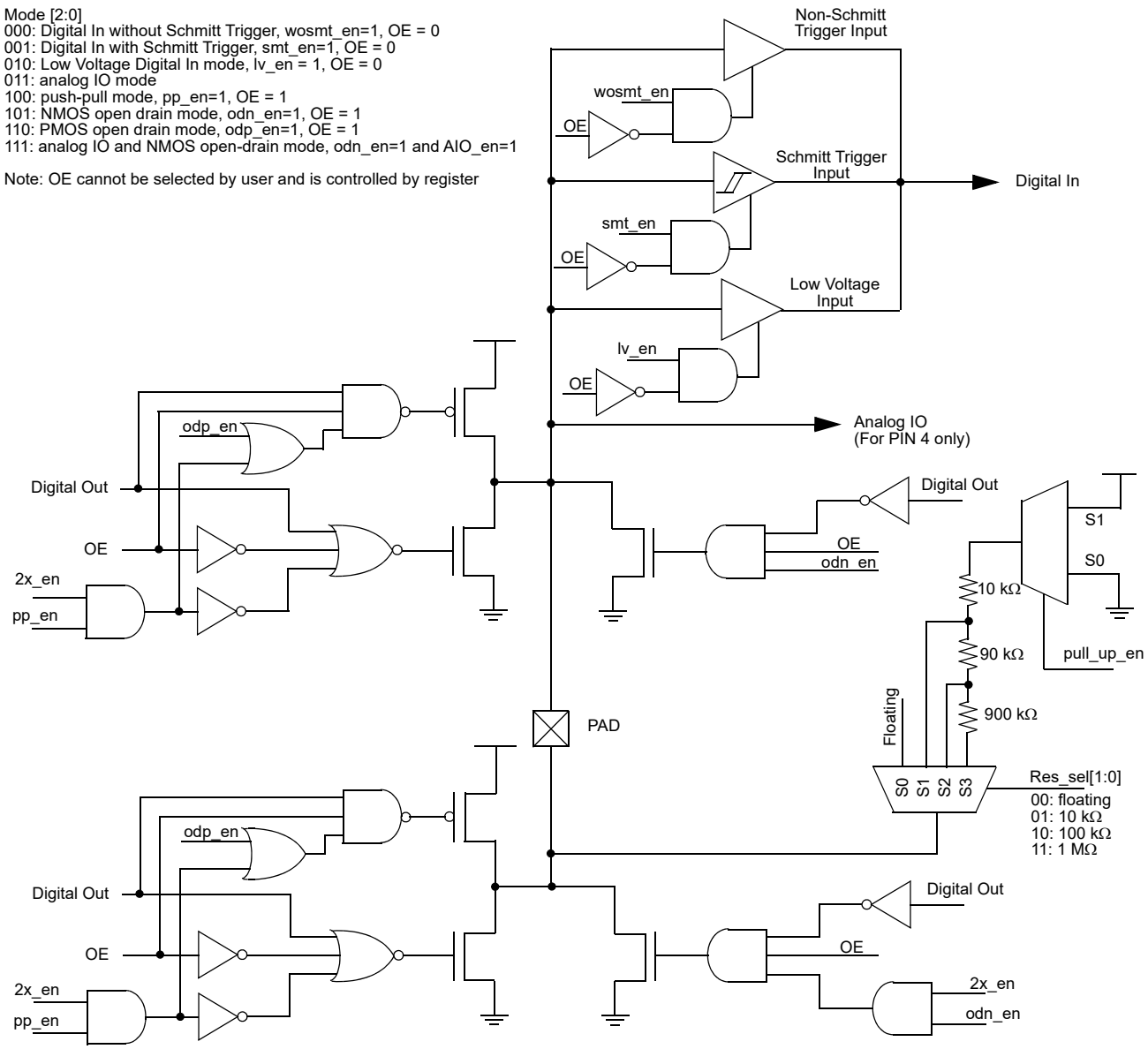

Figure 7. IO Structure Diagram

8.0 Connection Matrix

The Connection Matrix in the SLG46534 is used to create the internal routing for internal functional macrocells of the device once it is programmed. The registers are programmed from the one-time NVM cell during Test Mode Operation. The output of each functional macrocell within the SLG46534 has a specific digital bit code assigned to it that is either set to active “High” or inactive “Low” based on the design that is created. Once the 2048 register bits within the SLG46534 are programmed a fully custom circuit will be created.

The Connection Matrix has 64 inputs and 110 outputs. Each of the 64 inputs to the Connection Matrix is hard-wired to the digital output of a particular source macrocell, including I/O pins, LUTs, analog comparators, other digital resources and VDD and Ground. The input to a digital macrocell uses a 6-bit register to select one of these 64 input lines.

For a complete list of the SLG46534’s register table, see Section 21.0 Appendix A - SLG46534 Register Definition.

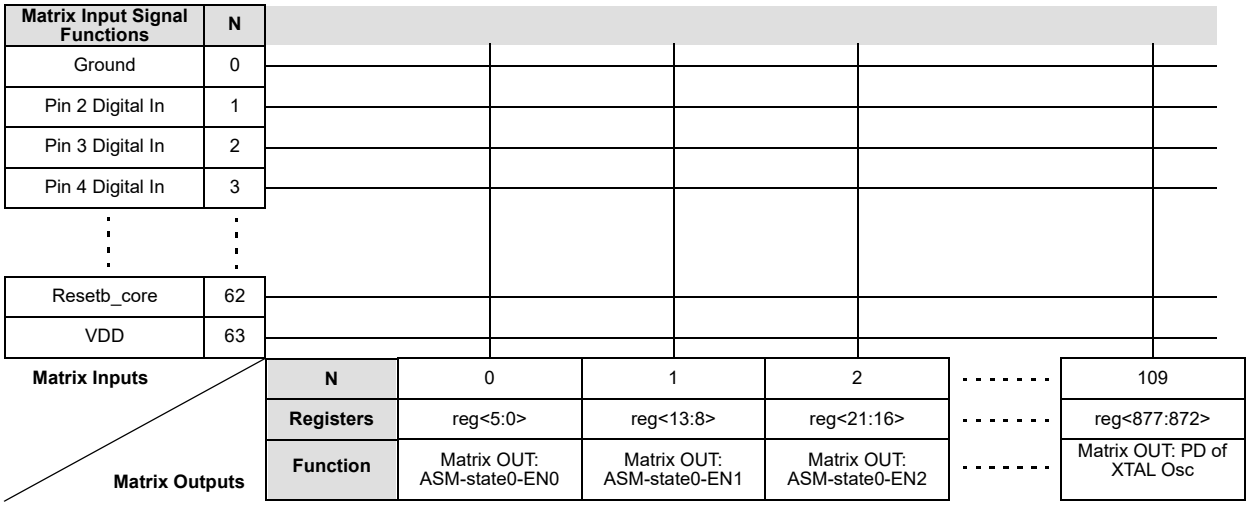

Figure 8. Connection Matrix

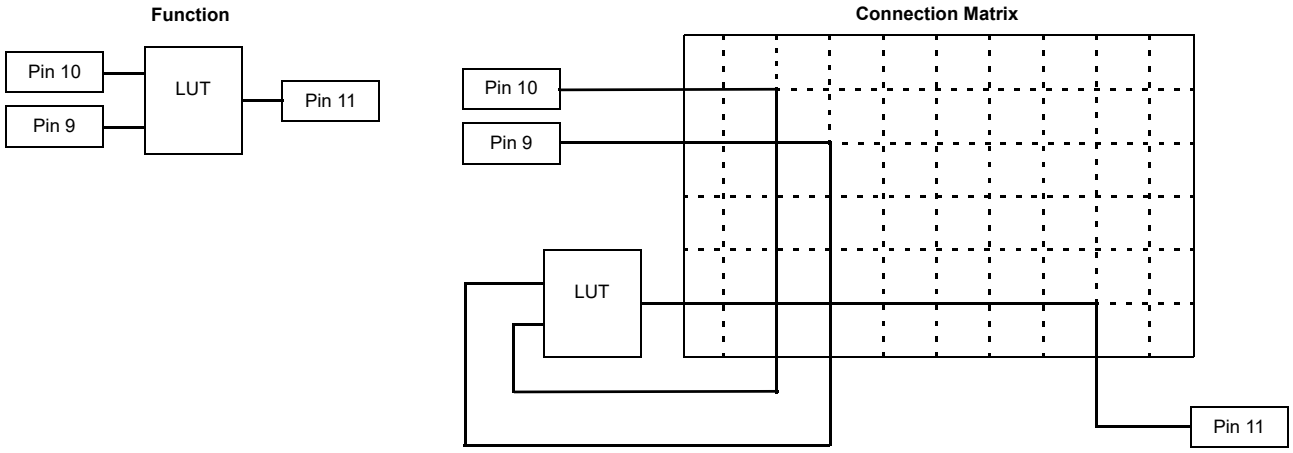

Figure 9. Connection Matrix Example

8.1 Matrix Input Table

Table 27. Matrix Input Table

Matrix Input Number	Matrix Input Signal Function	Matrix Decode					
		5	4	3	2	1	0
0	Ground	0	0	0	0	0	0
1	Pin2 Digital Input	0	0	0	0	0	1
2	Reserved	0	0	0	0	1	0
3	Pin3 Digital Input	0	0	0	0	1	1
4	Reserved	0	0	0	1	0	0
5	Pin4 Digital Input	0	0	0	1	0	1
6	Pin5 Digital Input	0	0	0	1	1	0
7	Pin8 Digital Input	0	0	0	1	1	1
8	LUT2_0 / DFF0 Output	0	0	1	0	0	0
9	LUT2_1 / DFF1 Output	0	0	1	0	0	1
10	LUT2_2 / DFF2 Output	0	0	1	0	1	0
11	LUT2_3 / PGEN Output	0	0	1	0	1	1
12	LUT3_0 / DFF3 Output	0	0	1	1	0	0
13	LUT3_1 / DFF4 Output	0	0	1	1	0	1
14	LUT3_2 / DFF5 Output	0	0	1	1	1	0
15	LUT3_3 / DFF6 Output	0	0	1	1	1	1
16	LUT3_4 / DFF7 Output	0	1	0	0	0	0
17	LUT3_5 / CNT_DLY2(8bit) Output	0	1	0	0	0	1
18	LUT3_6 / CNT_DLY3(8bit) Output	0	1	0	0	1	0
19	LUT3_7 / CNT_DLY4(8bit) Output	0	1	0	0	1	1
20	LUT3_8 / CNT_DLY5(8bit) Output	0	1	0	1	0	0
21	LUT3_9 / CNT_DLY6(8bit) Output	0	1	0	1	0	1
22	LUT4_0 / CNT_DLY0(16bit) Output	0	1	0	1	1	0
23	LUT4_1 / CNT_DLY1(16bit) Output	0	1	0	1	1	1
24	LUT3_10 / Pipe Delay (1st stage) Output	0	1	1	0	0	0
25	Pipe Delay Output0	0	1	1	0	0	1
26	Pipe Delay Output1	0	1	1	0	1	0
27	Internal OSC Pre-Divided by 1/2/4/8 Output and Post-Divided by 1/2/3/4/8/12/24/64 Output (25KHz/2MHz)	0	1	1	0	1	1
28	Internal OSC Pre-Divided by 1/2/4/8 Output and Post-Divided by 1/2/3/4/8/12/24/64 Output (25KHz/2MHz)	0	1	1	1	0	0
29	Internal OSC Pre-Divided by 1/2/4/8 Output (25MHz)	0	1	1	1	0	1
30	Filter0 / Edge Detect0 Output	0	1	1	1	1	0
31	Filter1 / Edge Detect1 Output	0	1	1	1	1	1
32	Pin6 Digital or I2C_virtual_0 Input	1	0	0	0	0	0
33	Pin7 Digital or I2C_virtual_1 Input	1	0	0	0	0	1
34	I2C_virtual_2 Input	1	0	0	0	1	0
35	I2C_virtual_3 Input	1	0	0	0	1	1

Table 27. Matrix Input Table

Matrix Input Number	Matrix Input Signal Function	Matrix Decode					
		5	4	3	2	1	0
36	I2C_virtual_4 Input	1	0	0	1	0	0
37	I2C_virtual_5 Input	1	0	0	1	0	1
38	I2C_virtual_6 Input	1	0	0	1	1	0
39	I2C_virtual_7 Input	1	0	0	1	1	1
40	ASM-stateX-dout0	1	0	1	0	0	0
41	ASM-stateX-dout1	1	0	1	0	0	1
42	ASM-stateX-dout2	1	0	1	0	1	0
43	ASM-stateX-dout3	1	0	1	0	1	1
44	ASM-stateX-dout4	1	0	1	1	0	0
45	ASM-stateX-dout5	1	0	1	1	0	1
46	ASM-stateX-dout6	1	0	1	1	1	0
47	ASM-stateX-dout7	1	0	1	1	1	1
48	Pin10 Digital Input	1	1	0	0	0	0
49	Reserved	1	1	0	0	0	1
50	Pin11 Digital Input	1	1	0	0	1	0
51	Reserved	1	1	0	0	1	1
52	Pin12 Digital Input	1	1	0	1	0	0
53	Pin13 Digital Input	1	1	0	1	0	1
54	Reserved	1	1	0	1	1	0
55	Reserved	1	1	0	1	1	1
56	Pin14 Digital Input	1	1	1	0	0	0
57	ACMP_0 Output	1	1	1	0	0	1
58	ACMP_1 Output	1	1	1	0	1	0
59	ACMP_2 Output	1	1	1	0	1	1
60	Reserved	1	1	1	1	0	0
61	Programmable Delay with Edge Detector Output	1	1	1	1	0	1
62	nRST_core (POR) as matrix input	1	1	1	1	1	0
63	VDD	1	1	1	1	1	1

8.2 Matrix Output Table

Table 28. Matrix Output Table

Register Bit Address	Matrix Output Signal Function Note: For each Address, the two most significant bits are unused)	Matrix Output Number
reg <7:0>	Matrix OUT: ASM-state0-EN0	0
reg <15:8>	Matrix OUT: ASM-state0-EN1	1
reg <23:16>	Matrix OUT: ASM-state0-EN2	2
reg <31:24>	Matrix OUT: ASM-state1-EN0	3
reg <39:32>	Matrix OUT: ASM-state1-EN1	4
reg <47:40>	Matrix OUT: ASM-state1-EN2	5
reg <55:48>	Matrix OUT: ASM-state2-EN0	6
reg <63:56>	Matrix OUT: ASM-state2-EN1	7
reg <71:64>	Matrix OUT: ASM-state2-EN2	8
reg <79:72>	Matrix OUT: ASM-state3-EN0	9
reg <87:80>	Matrix OUT: ASM-state3-EN1	10
reg <95:88>	Matrix OUT: ASM-state3-EN2	11
reg <103:96>	Matrix OUT: ASM-state4-EN0	12
reg <111:104>	Matrix OUT: ASM-state4-EN1	13
reg <119:112>	Matrix OUT: ASM-state4-EN2	14
reg <127:120>	Matrix OUT: ASM-state5-EN0	15
reg <135:128>	Matrix OUT: ASM-state5-EN1	16
reg <143:136>	Matrix OUT: ASM-state5-EN2	17
reg <151:144>	Matrix OUT: ASM-state6-EN0	18
reg <159:152>	Matrix OUT: ASM-state6-EN1	19
reg <167:160>	Matrix OUT: ASM-state6-EN2	20
reg <175:168>	Matrix OUT: ASM-state7-EN0	21
reg <183:176>	Matrix OUT: ASM-state7-EN1	22
reg <191:184>	Matrix OUT: ASM-state7-EN2	23
reg <199:192>	Matrix OUT: ASM-state-nRST	24
reg <207:200>	Reserved	25
reg <215:208>	Reserved	26
reg <223:216>	Matrix OUT: PIN3 Digital Output Source	27
reg <231:224>	Reserved	28
reg <239:232>	Reserved	29
reg <247:240>	Matrix OUT: PIN4 Digital Output Source	30
reg <255:248>	Matrix OUT: PIN5 Digital Output Source	31
reg <263:256>	Matrix OUT: PIN5 Output Enable	32
reg <271:264>	Matrix OUT: PIN6 Digital Output Source (SCL with VI/Input & NMOS open-drain)	33
reg <279:272>	Matrix OUT: PIN7 Digital Output Source (SDA with VI/Input & NMOS open-drain)	34

Table 28. Matrix Output Table

Register Bit Address	Matrix Output Signal Function Note: For each Address, the two most significant bits are unused)	Matrix Output Number
reg <287:280>	Matrix OUT: PIN8 Digital Output Source	35
reg <295:288>	Matrix OUT: PIN8 Output Enable	36
reg <303:296>	Matrix OUT: PIN10 Digital Output Source	37
reg <311:304>	Reserved	38
reg <319:312>	Reserved	39
reg <327:320>	Matrix OUT: PIN11 Digital Output Source	40
reg <335:328>	Matrix OUT: PIN11 Output Enable	41
reg <343:336>	Reserved	42
reg <351:344>	Matrix OUT: PIN12 Digital Output Source	43
reg <359:352>	Matrix OUT: PIN12 Output Enable	44
reg <367:360>	Matrix OUT: PIN13 Digital Output Source	45
reg <375:368>	Reserved	46
reg <383:376>	Reserved	47
reg <391:384>	Reserved	48
reg <399:392>	Reserved	49
reg <407:400>	Matrix OUT: PIN14 Digital Output Source	50
reg <415:408>	Matrix OUT: ACMP0 PDB (Power Down)	51
reg <423:416>	Matrix OUT: ACMP1 PDB (Power Down)	52
reg <431:424>	Matrix OUT: ACMP2 PDB (Power Down)	53
reg <439:432>	Reserved	54
reg <447:440>	Matrix OUT: Input of Filter_0 with fixed time edge detector	55
reg <455:448>	Matrix OUT: Input of Filter_1 with fixed time edge detector	56
reg <463:456>	Matrix OUT: Input of Programmable Delay & Edge Detector	57
reg <471:464>	Matrix OUT: OSC 25KHz/2MHz PDB (Power Down)	58
reg <479:472>	Matrix OUT: OSC 25MHz PDB (Power Down)	59
reg <487:480>	Matrix OUT: IN0 of LUT2_0 or Clock Input of DFF0	60
reg <495:488>	Matrix OUT: IN1 of LUT2_0 or Data Input of DFF0	61
reg <503:496>	Matrix OUT: IN0 of LUT2_1 or Clock Input of DFF1	62
reg <511:504>	Matrix OUT: IN1 of LUT2_1 or Data Input of DFF1	63
reg <519:512>	Matrix OUT: IN0 of LUT2_2 or Clock Input of DFF2	64
reg <527:520>	Matrix OUT: IN1 of LUT2_2 or Data Input of DFF2	65
reg <535:528>	Matrix OUT: IN0 of LUT2_3 or Clock Input of PGEN	66
reg <543:536>	Matrix OUT: IN1 of LUT2_3 or RSTB of PGEN	67
reg <551:544>	Matrix OUT: IN0 of LUT3_0 or Clock Input of DFF3	68

Table 28. Matrix Output Table

Register Bit Address	Matrix Output Signal Function Note: For each Address, the two most significant bits are unused)	Matrix Output Number
reg <559:552>	Matrix OUT: IN1 of LUT3_0 or Data Input of DFF3	69
reg <567:560>	Matrix OUT: IN2 of LUT3_0 or RSTB (SETB) of DFF3	70
reg <575:568>	Matrix OUT: IN0 of LUT3_1 or Clock Input of DFF4	71
reg <583:576>	Matrix OUT: IN1 of LUT3_1 or Data Input of DFF4	72
reg <591:584>	Matrix OUT: IN2 of LUT3_1 or RSTB (SETB) of DFF4	73
reg <599:592>	Matrix OUT: IN0 of LUT3_2 or Clock Input of DFF5	74
reg <607:600>	Matrix OUT: IN1 of LUT3_2 or Data Input of DFF5	75
reg <615:608>	Matrix OUT: IN2 of LUT3_2 or RSTB (SETB) of DFF5	76
reg <623:616>	Matrix OUT: IN0 of LUT3_3 or Clock Input of DFF6	77
reg <631:624>	Matrix OUT: IN1 of LUT3_3 or Data Input of DFF6	78
reg <639:632>	Matrix OUT: IN2 of LUT3_3 or RSTB (SETB) of DFF6	79
reg <647:640>	Matrix OUT: IN0 of LUT3_4 or Clock Input of DFF7	80
reg <655:648>	Matrix OUT: IN1 of LUT3_4 or Data Input of DFF7	81
reg <663:656>	Matrix OUT: IN2 of LUT3_4 or RSTB (SETB) of DFF7	82
reg <671:664>	Matrix OUT: IN0 of LUT3_5 or Delay2 Input (or Counter2 RST Input)	83
reg <679:672>	Matrix OUT: IN1 of LUT3_5 or External Clock Input of Delay2 (or Counter2)	84
reg <687:680>	Matrix OUT: IN2 of LUT3_5	85
reg <695:688>	Matrix OUT: IN0 of LUT3_6 or Delay3 Input (or Counter3 RST Input)	86
reg <703:696>	Matrix OUT: IN1 of LUT3_6 or External Clock Input of Delay3 (or Counter3)	87
reg <711:704>	Matrix OUT: IN2 of LUT3_6	88
reg <719:712>	Matrix OUT: IN0 of LUT3_7 or Delay4 Input (or Counter4 RST Input)	89
reg <727:720>	Matrix OUT: IN1 of LUT3_7 or External Clock Input of Delay4 (or Counter4)	90
reg <735:728>	Matrix OUT: IN2 of LUT3_7	91
reg <743:736>	Matrix OUT: IN0 of LUT3_8 or Delay5 Input (or Counter5 RST Input)	92
reg <751:744>	Matrix OUT: IN1 of LUT3_8 or External Clock Input of Delay5 (or Counter5)	93
reg <759:752>	Matrix OUT: IN2 of LUT3_8	94
reg <767:760>	Matrix OUT: IN0 of LUT3_9 or Delay6 Input (or Counter6 RST Input)	95
reg <775:768>	Matrix OUT: IN1 of LUT3_9 or External Clock Input of Delay6 (or Counter6)	96
reg <783:776>	Matrix OUT: IN2 of LUT3_9	97
reg <791:784>	Matrix OUT: IN0 of LUT3_10 or Input of Pipe Delay	98
reg <799:792>	Matrix OUT: IN1 of LUT3_10 or RSTB of Pipe Delay	99
reg <807:800>	Matrix OUT: IN2 of LUT3_10 or Clock of Pipe Delay	100
reg <815:808>	Matrix OUT: IN0 of LUT4_0 or Delay0 Input (or Counter0 RST/SET Input)	101
reg <823:816>	Matrix OUT: IN1 of LUT4_0 or External Clock Input of Delay0 (or Counter0)	102
reg <831:824>	Matrix OUT: IN2 of LUT4_0 or UP Input of FSM0	103
reg <839:832>	Matrix OUT: IN3 of LUT4_0 or KEEP Input of FSM0	104
reg <847:840>	Matrix OUT: IN0 of LUT4_1 or Delay1 Input (or Counter1 RST/SET Input)	105
reg <855:848>	Matrix OUT: IN1 of LUT4_1 or External Clock Input of Delay1 (or Counter1)	106
reg <863:856>	Matrix OUT: IN2 of LUT4_1 or UP Input of FSM1	107

Table 28. Matrix Output Table

Register Bit Address	Matrix Output Signal Function Note: For each Address, the two most significant bits are unused)	Matrix Output Number
reg <871:864>	Matrix OUT: IN3 of LUT4_1 or KEEP Input of FSM1	108
reg <879:872>	Matrix OUT: PD of crystal oscillator by reg<1268>	109

8.3 Connection Matrix Virtual Inputs

As mentioned previously, the Connection Matrix inputs come from the outputs of various digital macrocells on the device. Eight of the Connection Matrix inputs have the special characteristic that the state of these signal lines comes from a corresponding data bit written as a register value via I^2C. This gives the user the ability to write data via the serial channel, and have this information translated into signals that can be driven into the Connection Matrix and from the Connection Matrix to the digital inputs of other macrocells on the device. The I^2C address for reading and writing these register values is at byte 0244.

Six of the eight Connection Matrix Virtual Inputs are dedicated to this virtual input function. An I^2C write command to these register bits will set the signal values going into the Connection Matrix to the desired state. A read command to these register bits will read either the original data values coming from the NVM memory bits (that were loaded during the initial device startup), or the values from a previous write command (if that has happened).

Two of the eight Connection Matrix Virtual Inputs are shared with Pin digital inputs,(Pin6 Digital or I2C_virtual_0 Input) and (Pin7 Digital or I2C_virtual_1 Input). If the virtual input mode is selected, an I^2C write command to these register bits will set the signal values going into the Connection Matrix to the desired state. A read command to these register bits will read either the original data values coming from the NVM memory bits (that were loaded during the initial device startup), or the values from a previous write command (if that has happened). Two register bits select whether the Connection Matrix input comes from the pin input or from the virtual register:

- reg <1074> Select SCL & Virtual Input 0 or PIN6
- reg <1082> Select SDA & Virtual Input 1 or PIN7

See table below for Connection Matrix Virtual Inputs.

Matrix Input Number	Matrix Input Signal Function	Register Bit Addresses (d)
32	I2C_virtual_0 Input	reg<1952>
33	I2C_virtual_1 Input	reg<1953>
34	I2C_virtual_2 Input	reg<1954>
35	I2C_virtual_3 Input	reg<1955>
36	I2C_virtual_4 Input	reg<1956>
37	I2C_virtual_5 Input	reg<1957>
38	I2C_virtual_6 Input	reg<1958>
39	I2C_virtual_7 Input	reg<1959>

8.4 Connection Matrix Virtual Outputs

The digital outputs of the various macrocells are routed to the Connection Matrix to enable interconnections to the inputs of other macrocells in the device. At the same time, it is possible to read the state of each of the macrocell outputs as a register value via I^2C. This option, called Connection Matrix Virtual Outputs, allows the user to remotely read the values of each macrocell output. The I^2C addresses for reading these register values are at bytes 0240 to 0247. Write commands to these same register values will be ignored (with the exception of the Virtual Input register bits at byte 0244).

9.0 Combination Function Macrocells

The SLG46534 has seventeen combination function macrocells that can serve more than one logic or timing function. In each case, they can serve as a Look Up Table (LUT), or as another logic or timing function. See the list below for the functions that can be implemented in these macrocells:

- Three macrocells that can serve as either 2-bit LUTs or as D Flip Flops;
- Five macrocells that can serve as either 3-bit LUTs or as D Flip Flops with Set/Reset Input;
- One macrocell that can serve as either 3-bit LUT or as Pipe Delay;
- One macrocell that can serve as either 2-bit LUT or as Programmable Pattern Generator (PGEN);
- Five macrocells that can serve as either 3-bit LUTs or as 8-Bit Counter / Delays;
- Two macrocells that can serve as either 4-bit LUTs or as 16-Bit Counter / Delays.

Inputs/Outputs for the 17 combination function macrocells are configured from the connection matrix with specific logic functions being defined by the state of NVM bits.

When used as a LUT to implement combinatorial logic functions, the outputs of the LUTs can be configured to any user defined function, including the following standard digital logic devices (AND, NAND, OR, NOR, XOR, XNOR).

9.1 2-Bit LUT or D Flip Flop Macrocells

There are three macrocells that can serve as either 2-bit LUTs or as D Flip Flops. When used to implement LUT functions, the 2-bit LUTs each take in two input signals from the connection matrix and produce a single output, which goes back into the connection matrix. When used to implement D Flip Flop function, the two input signals from the connection matrix go to the data (D) and clock (clk) inputs for the Flip Flop, with the output going back to the connection matrix.

The operation of the D Flip-Flop and Latch will follow the functional descriptions below:

DFF: CLK is rising edge triggered, then Q = D; otherwise Q will not change.

Latch: when CLK is Low, then Q = D; otherwise Q remains its previous value (input D has no effect on the output, when CLK is High)

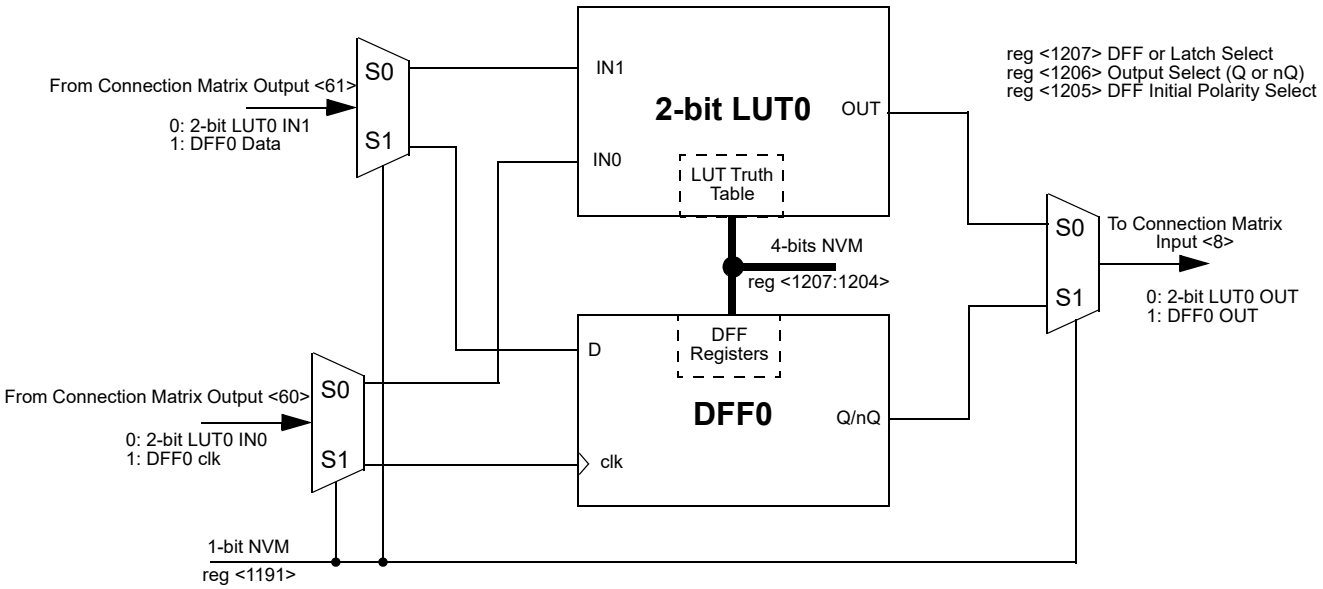

Figure 10. 2-bit LUT0 or DFF0

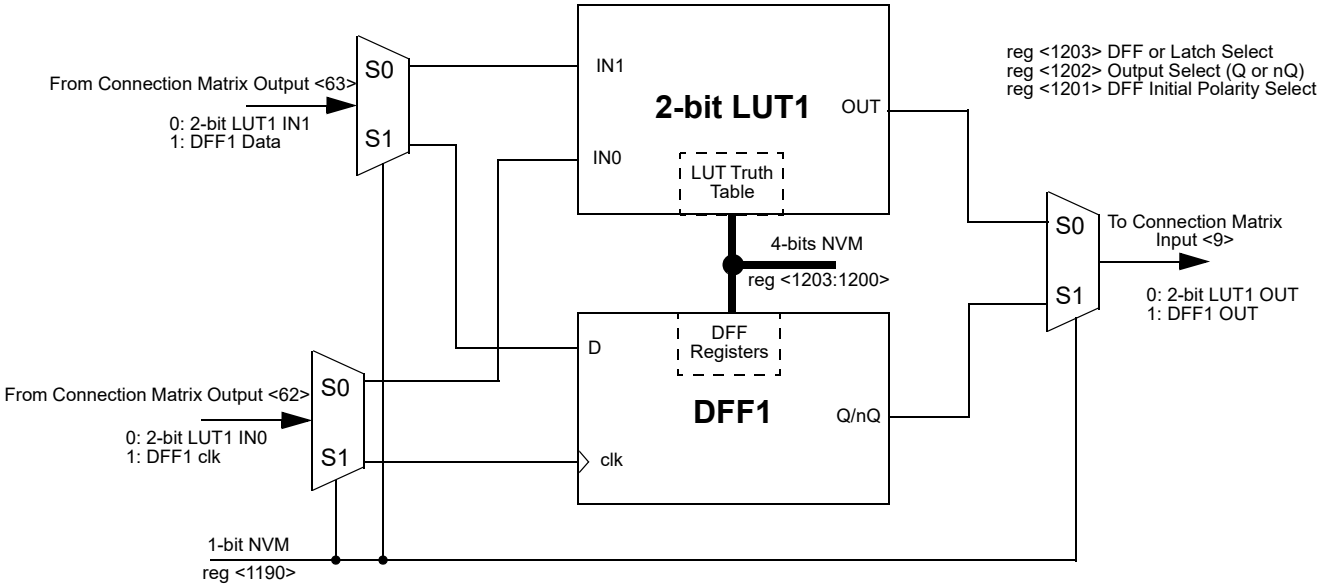

Figure 11. 2-bit LUT1 or DFF1

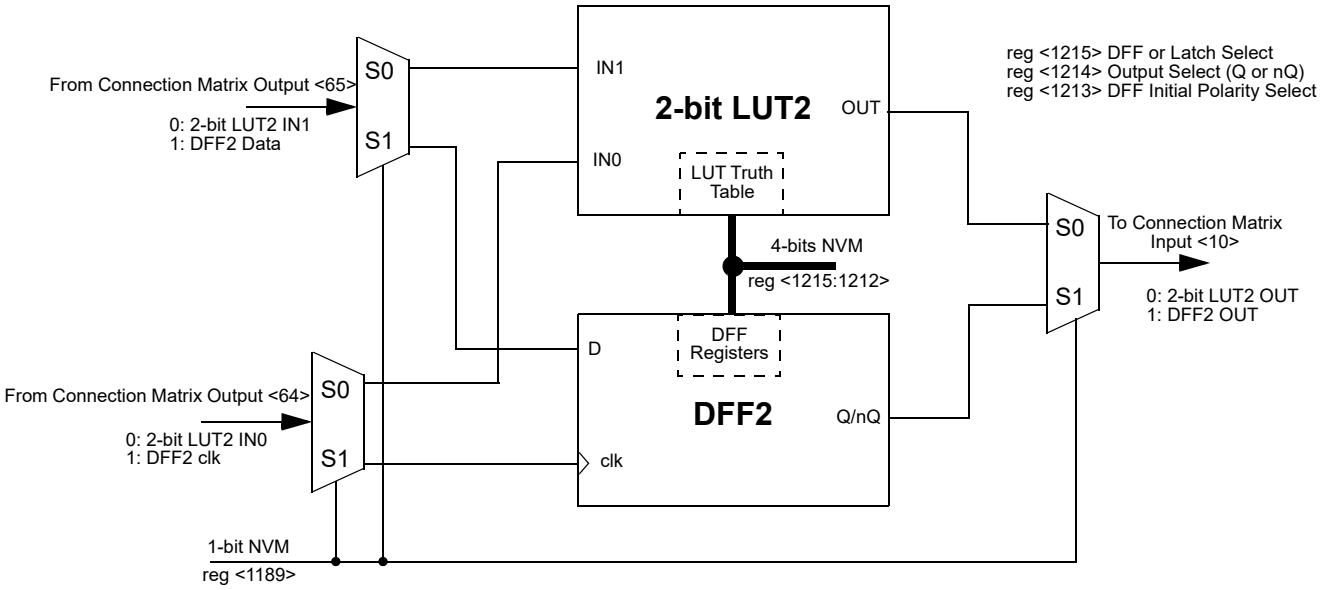

Figure 12. 2-bit LUT2 or DFF2

9.1.1 2-Bit LUT or D Flip Flop Macrocells Used as 2-Bit LUTs

Table 29. 2-bit LUT0 Truth Table

IN1	IN0	OUT	
0	0	reg <1204>	LSB
0	1	reg <1205>	
1	0	reg <1206>	
1	1	reg <1207>	MSB

Table 30. 2-bit LUT1 Truth Table

IN1	IN0	OUT	
0	0	reg <1200>	LSB
0	1	reg <1201>	
1	0	reg <1202>	
1	1	reg <1203>	MSB

Table 31. 2-bit LUT2 Truth Table

IN1	IN0	OUT	
0	0	reg <1212>	LSB
0	1	reg <1213>	
1	0	reg <1214>	
1	1	reg <1215>	MSB

Each Macrocell, when programmed for a LUT function, uses a 4-bit register to define their output function:

2-Bit LUT0 is defined by reg<1207:1204>

2-Bit LUT1 is defined by reg<1203:1200>

2-Bit LUT2 is defined by reg<1215:1212>

The table below shows the register bits for the standard digital logic devices (AND, NAND, OR, NOR, XOR, XNOR) that can be created within each of the two 2-bit LUT logic cells.

Table 32. 2-bit LUT Standard Digital Functions

Function	MSB			LSB
AND-2	1	0	0	0
NAND-2	0	1	1	1
OR-2	1	1	1	0
NOR-2	0	0	0	1
XOR-2	0	1	1	0
XNOR-2	1	0	0	1

9.1.2 2-Bit LUT or D Flip Flop Macrocells Used as D Flip Flop Register Settings

Table 33. DFF0 Register Settings

Signal Function	Register Bit Address	Register Definition
LUT2_0 or DFF0 Select	<1191>	0: LUT2_0 1: DFF0
DFF0 Initial Polarity Select	<1205>	0: Low 1: High
DFF0 Output Select	<1206>	0: Q output 1: nQ output
DFF0 or Latch Select	<1207>	0: DFF function 1: Latch function

Table 34. DFF1 Register Settings

Signal Function	Register Bit Address	Register Definition
LUT2_1 or DFF1 Select	<1190>	0: LUT2_1 1: DFF1
DFF1 Initial Polarity Select	<1201>	0: Low 1: High
DFF1 Output Select	<1202>	0: Q output 1: nQ output
Select or Latch select	<1203>	0: DFF function 1: Latch function

Table 35. DFF2 Register Settings

Signal Function	Register Bit Address	Register Definition
LUT2_2 or DFF2 Select	<1189>	0: LUT2_2 1: DFF2
DFF2 Initial Polarity Select	<1213>	0: Low 1: High
DFF2 Output Select	<1214>	0: Q output 1: nQ output
DFF2 or Latch Select	<1215>	0: DFF function 1: Latch function

9.2 Initial Polarity Operations

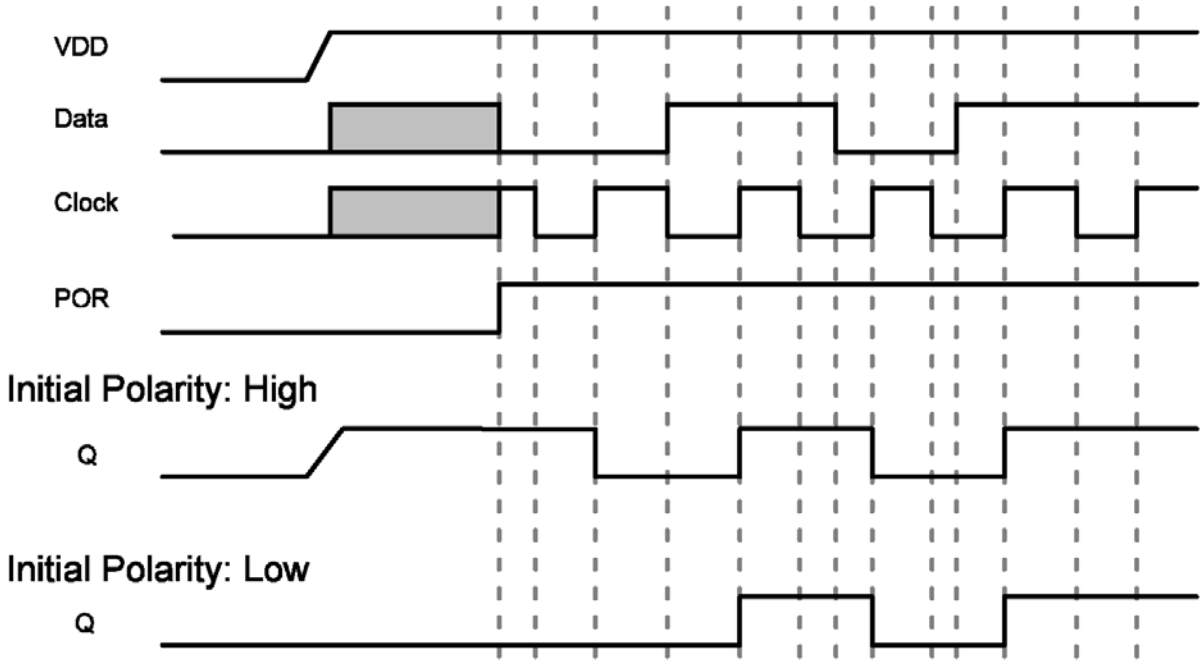

Figure 13. DFF Polarity Operations

9.3 3-Bit LUT or D Flip Flop with Set/Reset Macrocells

There are five macrocells that can serve as either 3-bit LUTs or as D Flip Flops with Set/Reset inputs. When used to implement LUT functions, the 3-bit LUTs each take in three input signals from the connection matrix and produce a single output, which goes back into the connection matrix. When used to implement D Flip Flop function, the three input signals from the connection matrix go to the data (D) and clock (clk) and Set/Reset (nRST/nSET) inputs for the Flip Flop, with the output going back to the connection matrix.

DFF3 has a user selectable option to allow the macrocell output to either come from the Q/nQ output of one D Flip Flop, or two D Flip Flops in series, with the first D Flip Flop triggering on the rising clock edge, and the second D Flip Flop triggering on the falling clock edge.

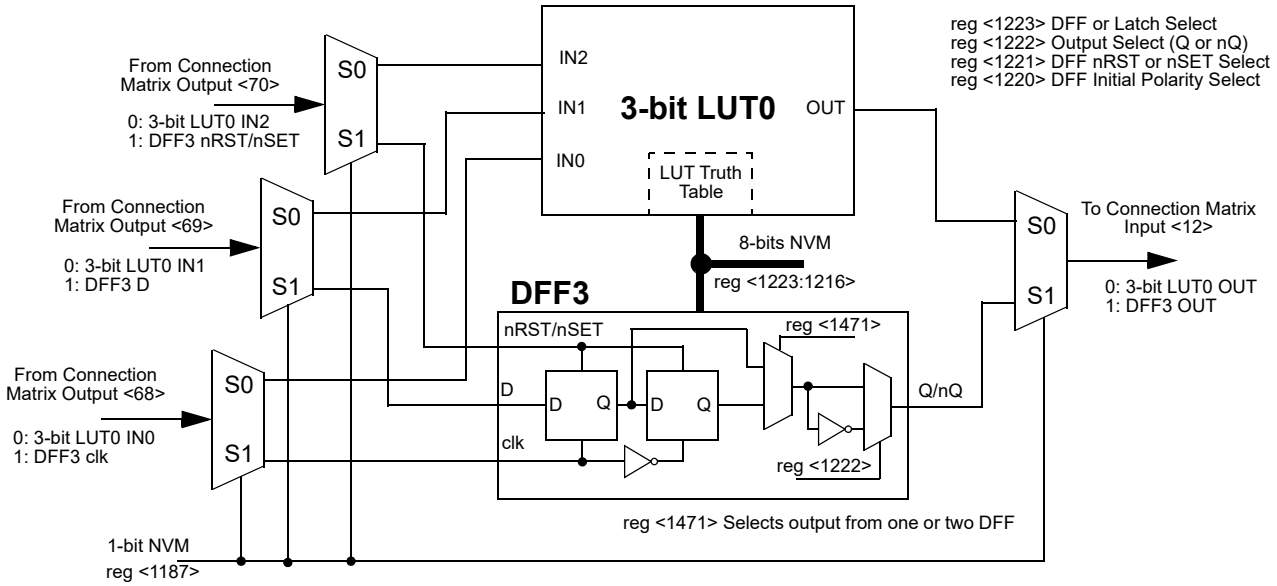

Figure 14. 3-bit LUT0 or DFF3 with RST/SET

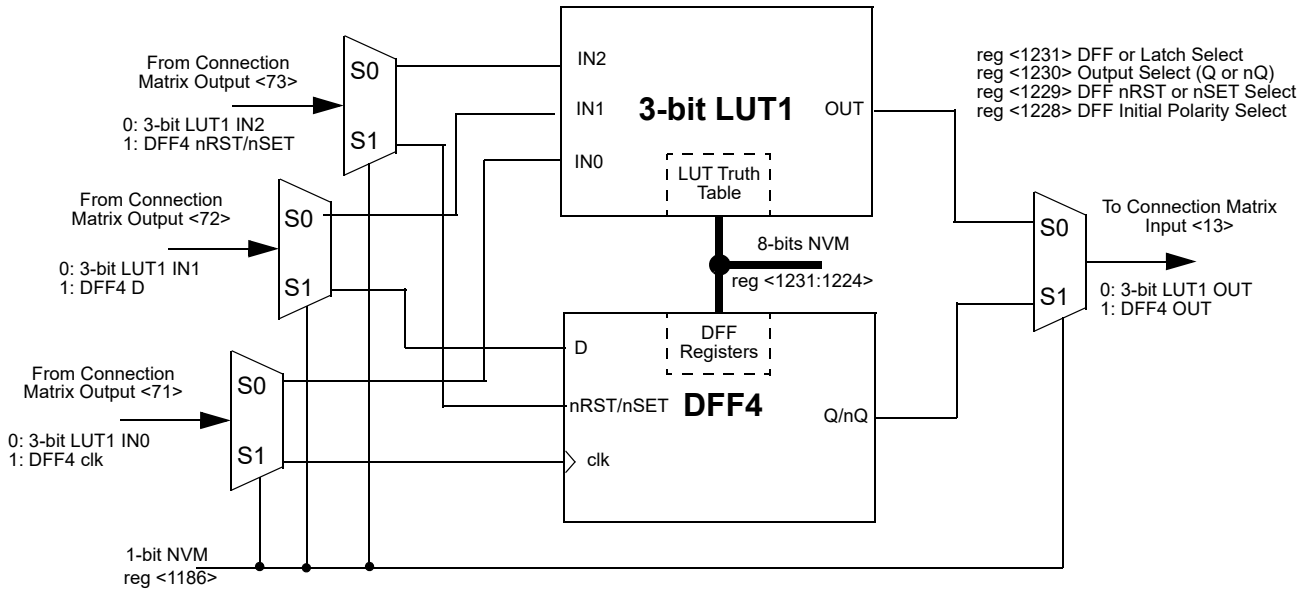

Figure 15. 3-bit LUT1 or DFF4 with RST/SET

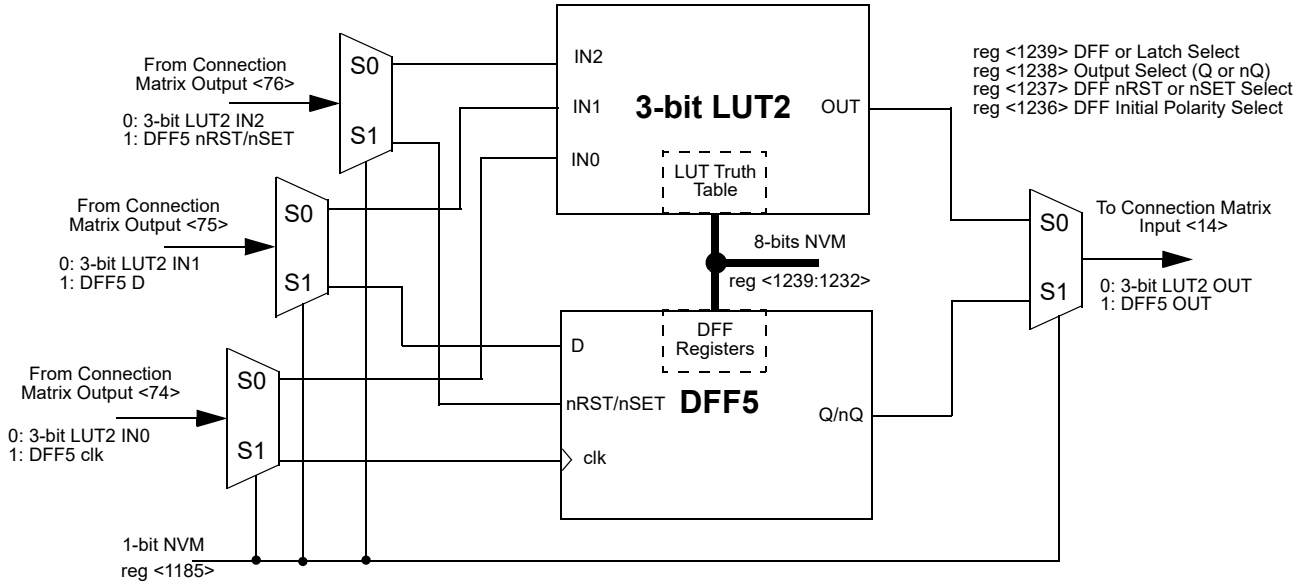

Figure 16. 3-bit LUT2 or DFF5 with RST/SET

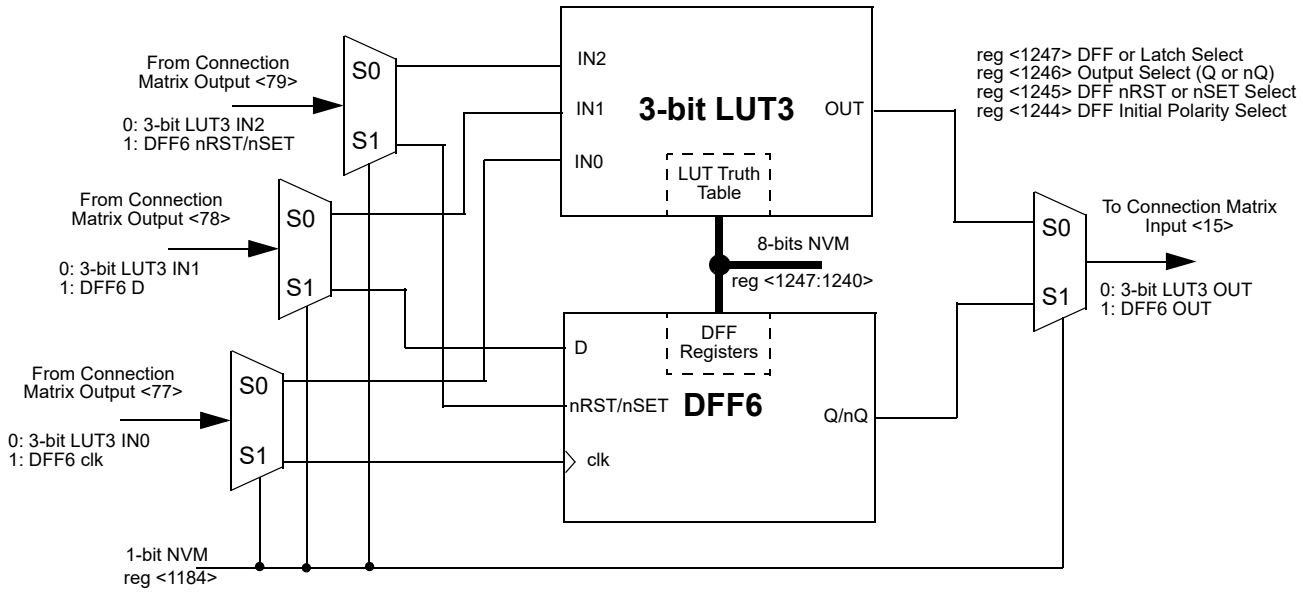

Figure 17. 3-bit LUT3 or DFF6 with RST/SET

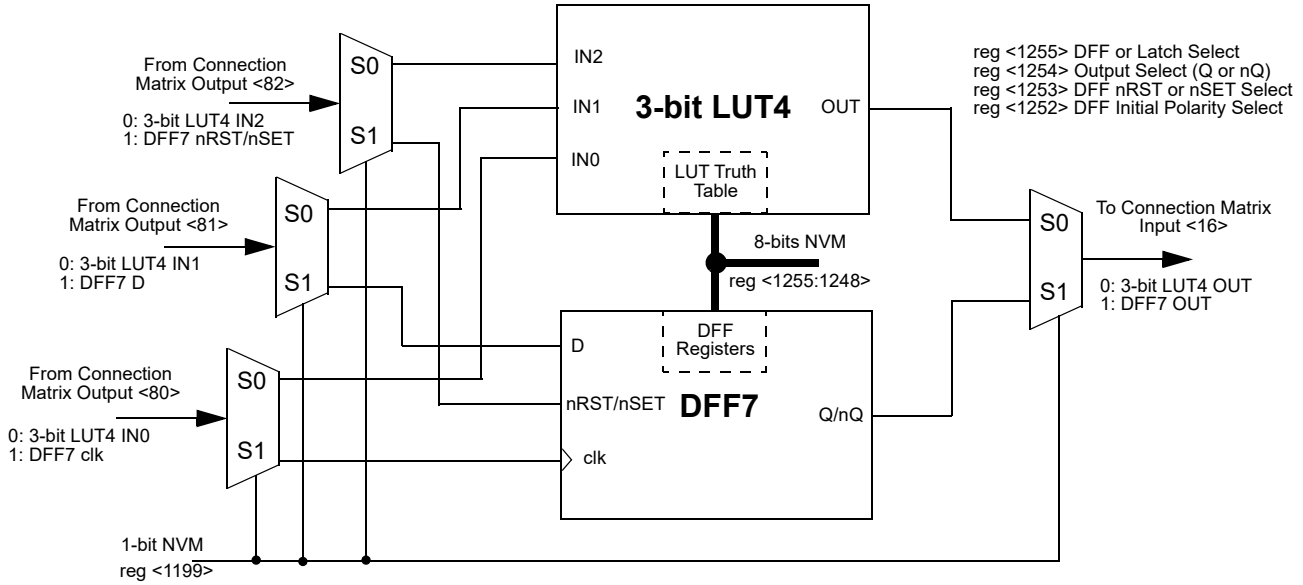

Figure 18. 3-bit LUT4 or DFF7 with RST/SET

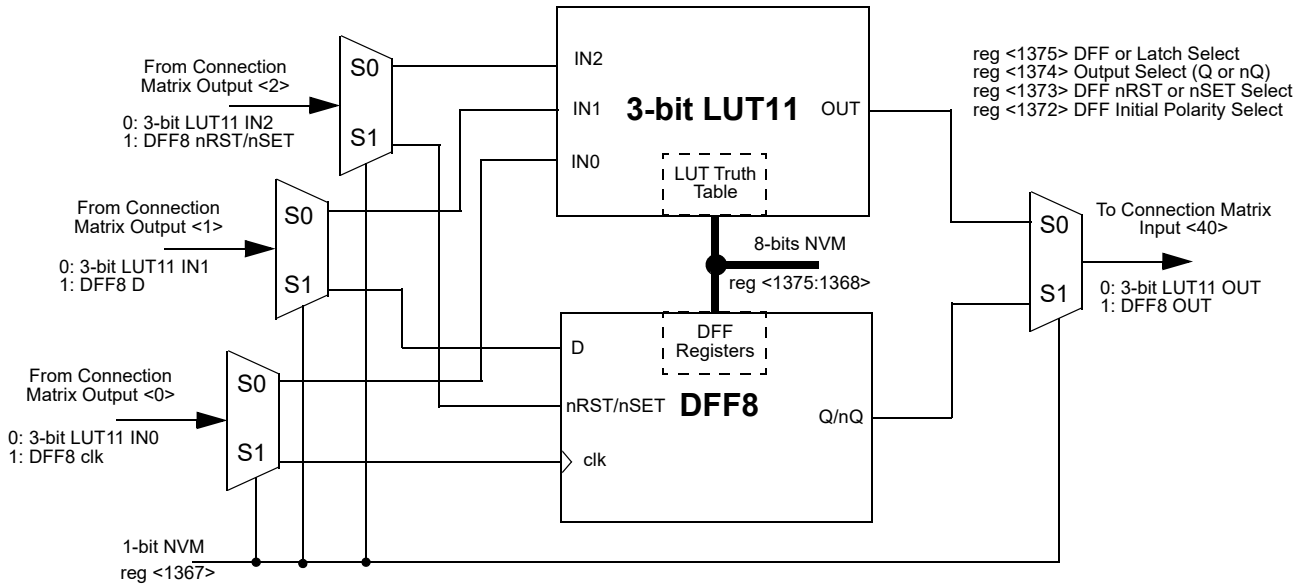

Figure 19. 3-bit LUT11 or DFF8 with RST/SET

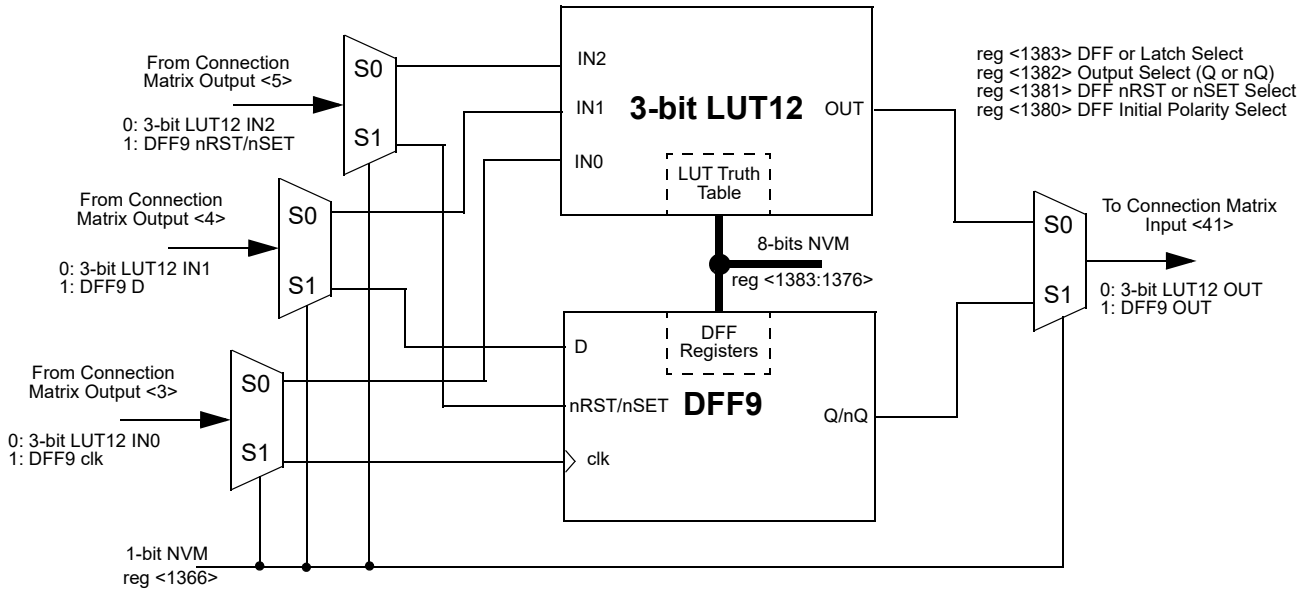

Figure 20. 3-bit LUT12 or DFF9 with RST/SET

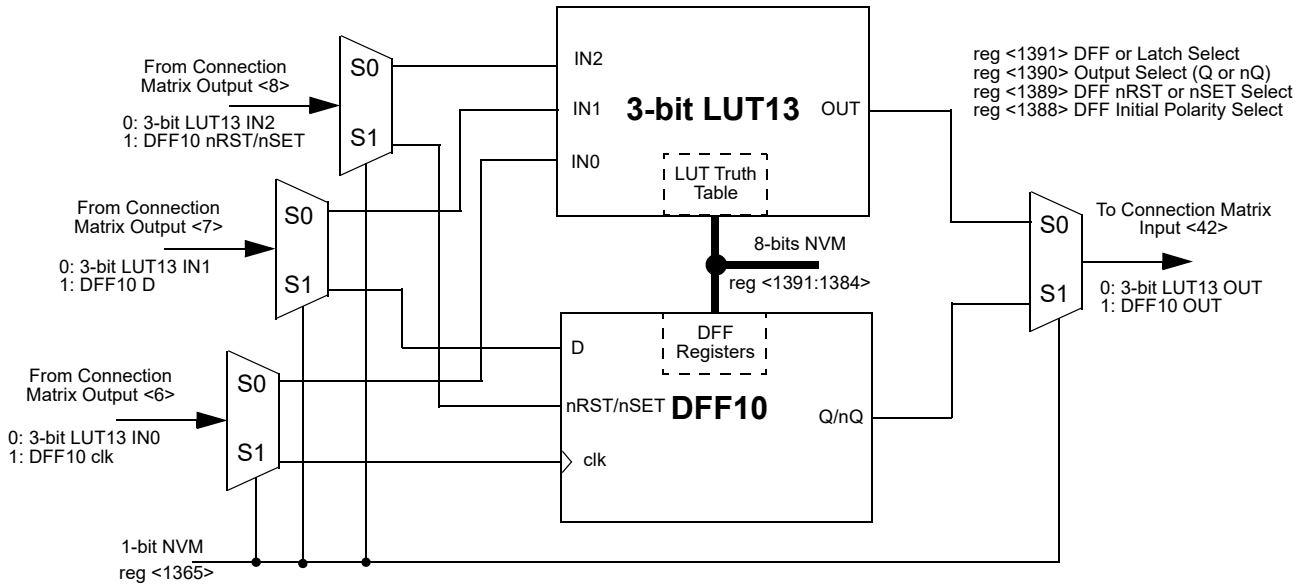

Figure 21. 3-bit LUT13 or DFF10 with RST/SET

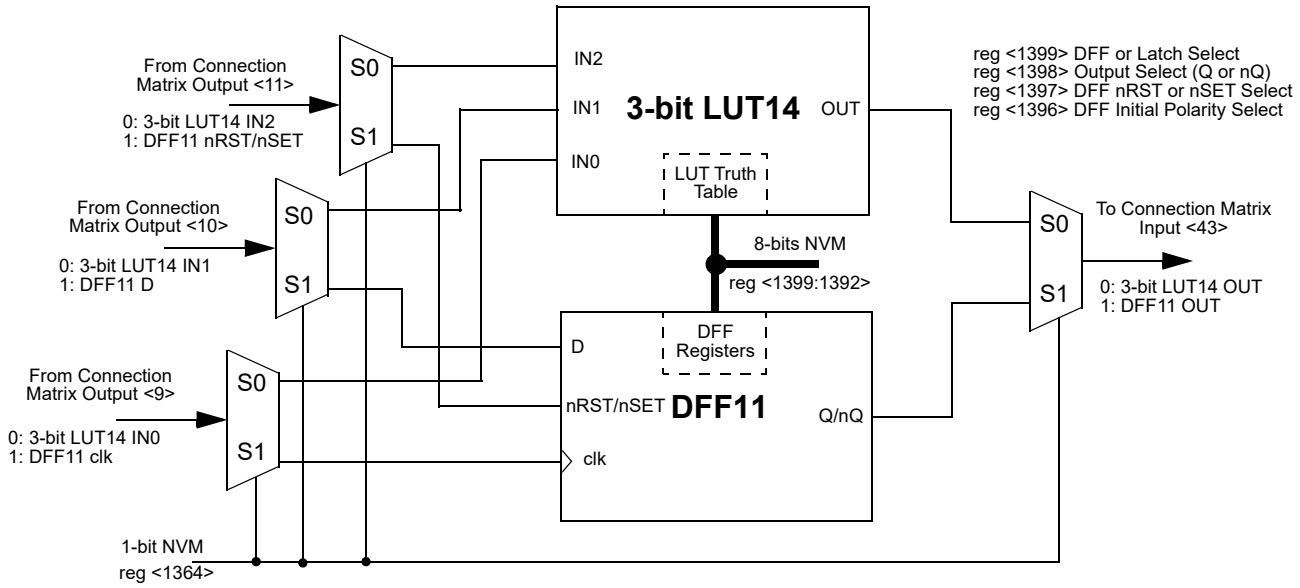

Figure 22. 3-bit LUT14 or DFF11with RST/SET

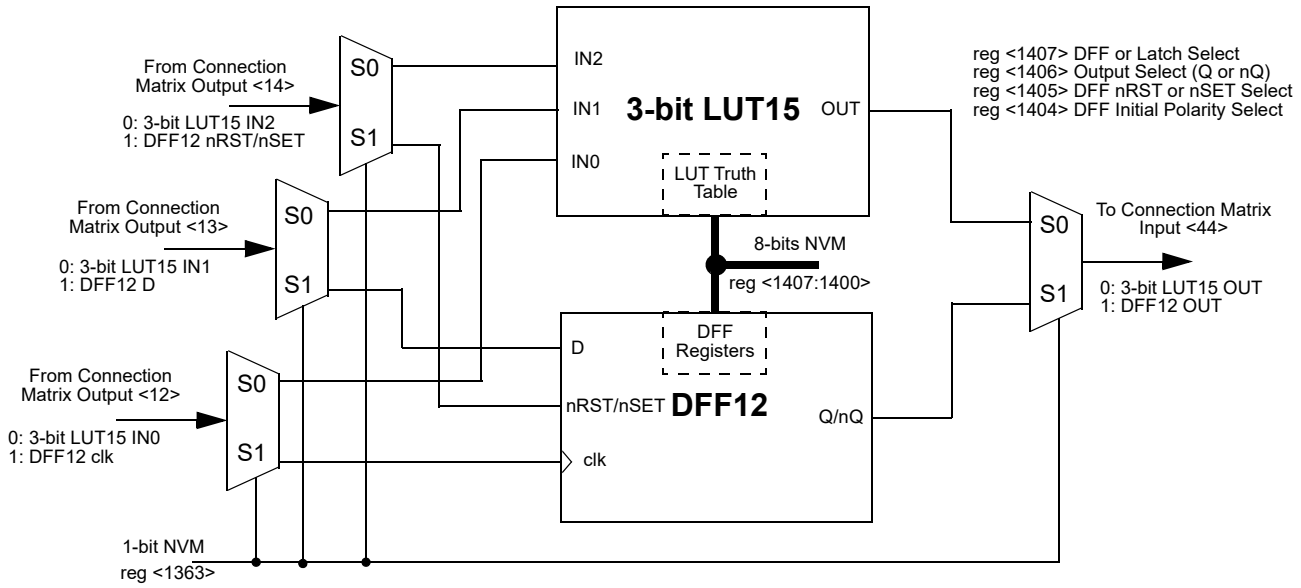

Figure 23. 3-bit LUT15 or DFF12 with RST/SET

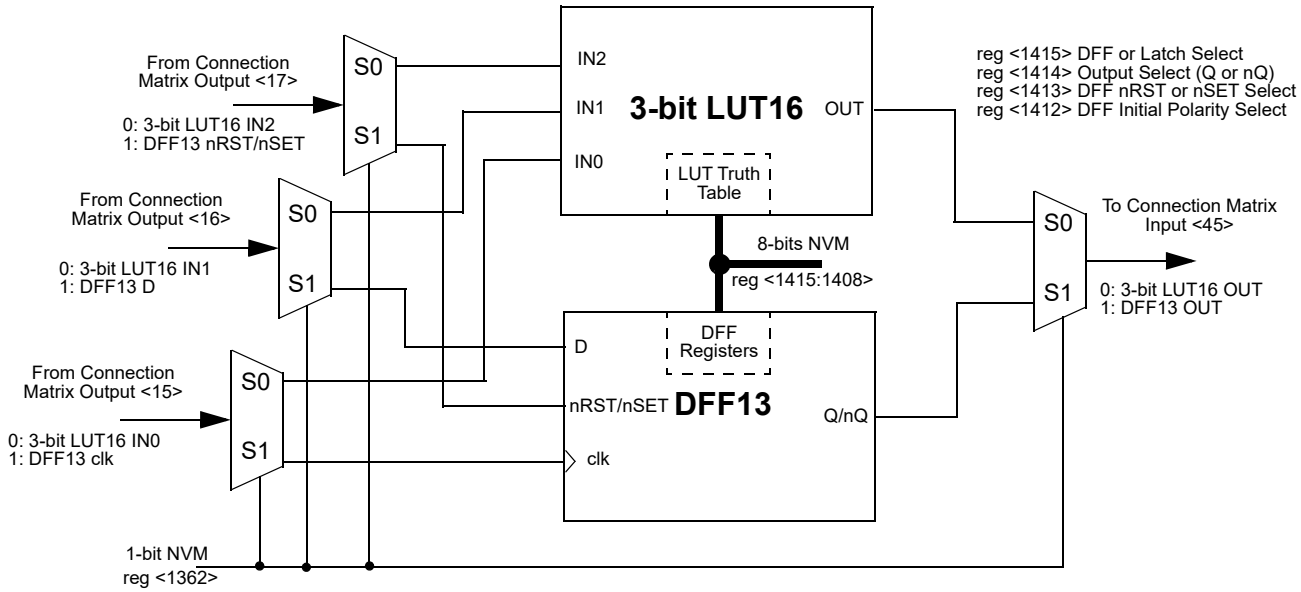

Figure 24. 3-bit LUT16 or DFF13 with RST/SET

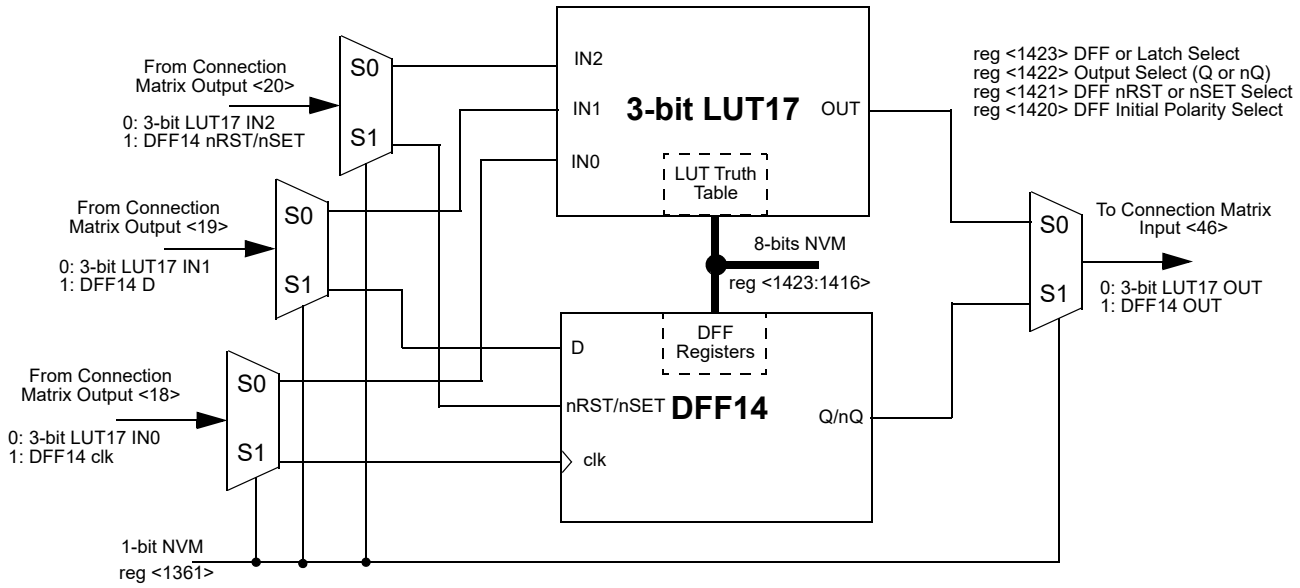

Figure 25. 3-bit LUT17 or DFF14 with RST/SET

9.3.1 3-Bit LUT or D Flip Flop Macrocells Used as 3-Bit LUTs

Table 36. 3-bit LUT0 Truth Table

IN2	IN1	IN0	OUT	
0	0	0	reg <1216>	LSB
0	0	1	reg <1217>	
0	1	0	reg <1218>	
0	1	1	reg <1219>	
1	0	0	reg <1220>	
1	0	1	reg <1221>	
1	1	0	reg <1222>	
1	1	1	reg <1223>	MSB

Table 37. 3-bit LUT1 Truth Table

IN2	IN1	IN0	OUT	
0	0	0	reg <1224>	LSB
0	0	1	reg <1225>	
0	1	0	reg <1226>	
0	1	1	reg <1227>	
1	0	0	reg <1228>	
1	0	1	reg <1229>	
1	1	0	reg <1230>	
1	1	1	reg <1231>	MSB

Table 38. 3-bit LUT2 Truth Table

IN2	IN1	IN0	OUT	
0	0	0	reg <1232>	LSB
0	0	1	reg <1233>	
0	1	0	reg <1234>	
0	1	1	reg <1235>	
1	0	0	reg <1236>	
1	0	1	reg <1237>	
1	1	0	reg <1238>	
1	1	1	reg <1239>	MSB

Table 39. 3-bit LUT3 Truth Table

IN2	IN1	IN0	OUT	
0	0	0	reg <1240>	LSB
0	0	1	reg <1241>	
0	1	0	reg <1242>	
0	1	1	reg <1243>	
1	0	0	reg <1244>	
1	0	1	reg <1245>	
1	1	0	reg <1246>	
1	1	1	reg <1247>	MSB

Table 40. 3-bit LUT4 Truth Table

IN2	IN1	IN0	OUT	
0	0	0	reg <1248>	LSB
0	0	1	reg <1249>	
0	1	0	reg <1250>	
0	1	1	reg <1251>	
1	0	0	reg <1252>	
1	0	1	reg <1253>	
1	1	0	reg <1254>	
1	1	1	reg <1255>	MSB

Table 41. 3-bit LUT11 Truth Table

IN2	IN1	IN0	OUT	
0	0	0	reg <1368>	LSB
0	0	1	reg <1369>	
0	1	0	reg <1370>	
0	1	1	reg <1371>	
1	0	0	reg <1372>	
1	0	1	reg <1373>	
1	1	0	reg <1374>	
1	1	1	reg <1375>	MSB

Table 42. 3-bit LUT12 Truth Table

IN2	IN1	IN0	OUT	
0	0	0	reg <1376>	LSB
0	0	1	reg <1377>	
0	1	0	reg <1378>	
0	1	1	reg <1379>	
1	0	0	reg <1380>	
1	0	1	reg <1381>	
1	1	0	reg <1382>	
1	1	1	reg <1383>	MSB

Table 43. 3-bit LUT13 Truth Table

IN2	IN1	IN0	OUT	
0	0	0	reg <1384>	LSB
0	0	1	reg <1385>	
0	1	0	reg <1386>	
0	1	1	reg <1387>	
1	0	0	reg <1388>	
1	0	1	reg <1389>	
1	1	0	reg <1390>	
1	1	1	reg <1391>	MSB

Table 44. 3-bit LUT14 Truth Table

IN2	IN1	IN0	OUT	
0	0	0	reg <1392>	LSB
0	0	1	reg <1393>	
0	1	0	reg <1394>	
0	1	1	reg <1395>	
1	0	0	reg <1396>	
1	0	1	reg <1397>	
1	1	0	reg <1398>	
1	1	1	reg <1399>	MSB

Table 45. 3-bit LUT15 Truth Table

IN2	IN1	IN0	OUT	
0	0	0	reg <1400>	LSB
0	0	1	reg <1401>	
0	1	0	reg <1402>	
0	1	1	reg <1403>	
1	0	0	reg <1404>	
1	0	1	reg <1405>	
1	1	0	reg <1406>	
1	1	1	reg <1407>	MSB

Table 46. 3-bit LUT16 Truth Table

IN2	IN1	IN0	OUT	
0	0	0	reg <1408>	LSB
0	0	1	reg <1409>	
0	1	0	reg <1410>	
0	1	1	reg <1411>	
1	0	0	reg <1412>	
1	0	1	reg <1413>	
1	1	0	reg <1414>	
1	1	1	reg <1415>	MSB

Table 47. 3-bit LUT17 Truth Table

IN2	IN1	IN0	OUT	
0	0	0	reg <1416>	LSB
0	0	1	reg <1417>	
0	1	0	reg <1418>	
0	1	1	reg <1419>	
1	0	0	reg <1420>	
1	0	1	reg <1421>	
1	1	0	reg <1422>	
1	1	1	reg <1423>	MSB

Each Macrocell, when programmed for a LUT function, uses a 8-bit register to define their output function:

3-Bit LUT0 is defined by reg<1223:1216>

3-Bit LUT1 is defined by reg<1231:1324>

3-Bit LUT2 is defined by reg<1239:1232>

3-Bit LUT3 is defined by reg<1247:1240>

3-Bit LUT4 is defined by reg<1255:1248>

The table below shows the register bits for the standard digital logic devices (AND, NAND, OR, NOR, XOR, XNOR) that can be created within each of the six 3-bit LUT logic cells.

Table 48. 3-bit LUT Standard Digital Functions

Function	MSB							LSB
AND-3	1	0	0	0	0	0	0	0
NAND-3	0	1	1	1	1	1	1	1
OR-3	1	1	1	1	1	1	1	0
NOR-3	0	0	0	0	0	0	0	1
XOR-3	1	0	0	1	0	1	1	0
XNOR-3	0	1	1	0	1	0	0	1

9.3.2 3-Bit LUT or D Flip Flop Macrocells Used as D Flip Flop Register Settings

Table 49. DFF3 Register Settings

Signal Function	Register Bit Address	Register Definition
LUT3_0 or DFF3 Select	reg<1187>	0: LUT3_0 1: DFF3
DFF3 Initial Polarity Select	reg<1220>	0: Low 1: High
DFF3 nRST/nSET Select	reg<1221>	1: nSET from matrix out 0: nRST from matrix out
DFF3 Output Select	reg<1222>	0: Q output 1: nQ output
DFF3 or Latch Select	reg<1223>	0: DFF function 1: Latch function

Table 50. DFF4 Register Settings

Signal Function	Register Bit Address	Register Definition
LUT3_1 or DFF4 Select	reg<1186>	0: LUT3_1 1: DFF4
DFF4 Initial Polarity Select	reg<1128>	0: Low 1: High
DFF4 nRST/nSET Select	reg<1129>	1: nSET from matrix out 0: nRST from matrix out
DFF4 Output Select	reg<1130>	0: Q output 1: nQ output
DFF4 or Latch Select	reg<1131>	0: DFF function 1: Latch function

Table 51. DFF5 Register Settings

Signal Function	Register Bit Address	Register Definition
LUT3_2 or DFF5 Select	reg<1185>	0: LUT3_2 1: DFF5
DFF5 Initial Polarity Select	reg<1236>	0: Low 1: High
DFF5 nRST/nSET Select	reg<1237>	1: nSET from matrix out 0: nRST from matrix out
DFF5 Output Select	reg<1238>	0: Q output 1: nQ output
DFF5 or Latch Select	reg<1239>	0: DFF function 1: Latch function

Table 52. DFF6 Register Settings

Signal Function	Register Bit Address	Register Definition
LUT3_3 or DFF6 Select	reg<1184>	0: LUT3_3 1: DFF6
DFF6 Initial Polarity Select	reg<1244>	0: Low 1: High
DFF6 nRST/nSET Select	reg<1245>	1: nSET from matrix out 0: nRST from matrix out
DFF6 Output Select	reg<1246>	0: Q output 1: nQ output
DFF6 or Latch Select	reg<1247>	0: DFF function 1: Latch function

Table 53. DFF7 Register Settings

Signal Function	Register Bit Address	Register Definition
LUT3_4 or DFF7 Select	reg<1199>	0: LUT3_4 1: DFF7
DFF7 Initial Polarity Select	reg<1252>	0: Low 1: High
DFF7 nRST/nSET Select	reg<1253>	1: nSET from matrix out 0: nRST from matrix out
DFF7 Output Select	reg<1254>	0: Q output 1: nQ output
DFF7 or Latch Select	reg<1255>	0: DFF function 1: Latch function

9.4 Initial Polarity Operations

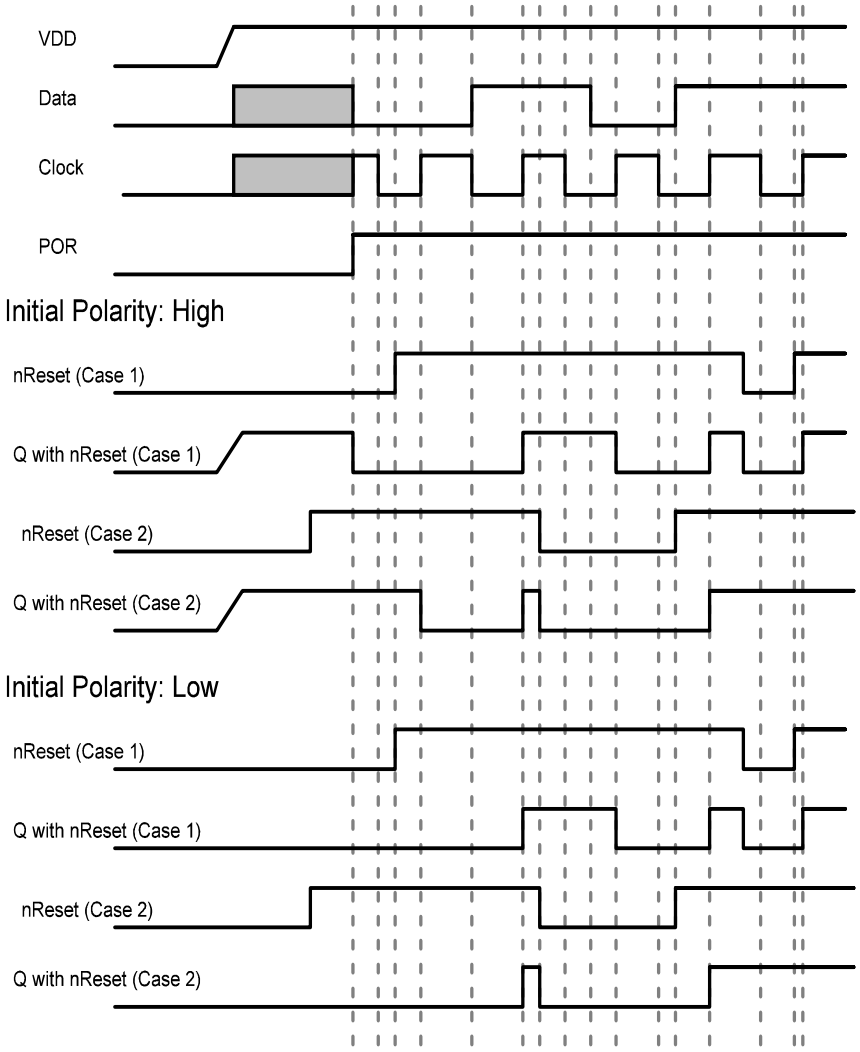

Figure 26. DFF Polarity Operations with nReset

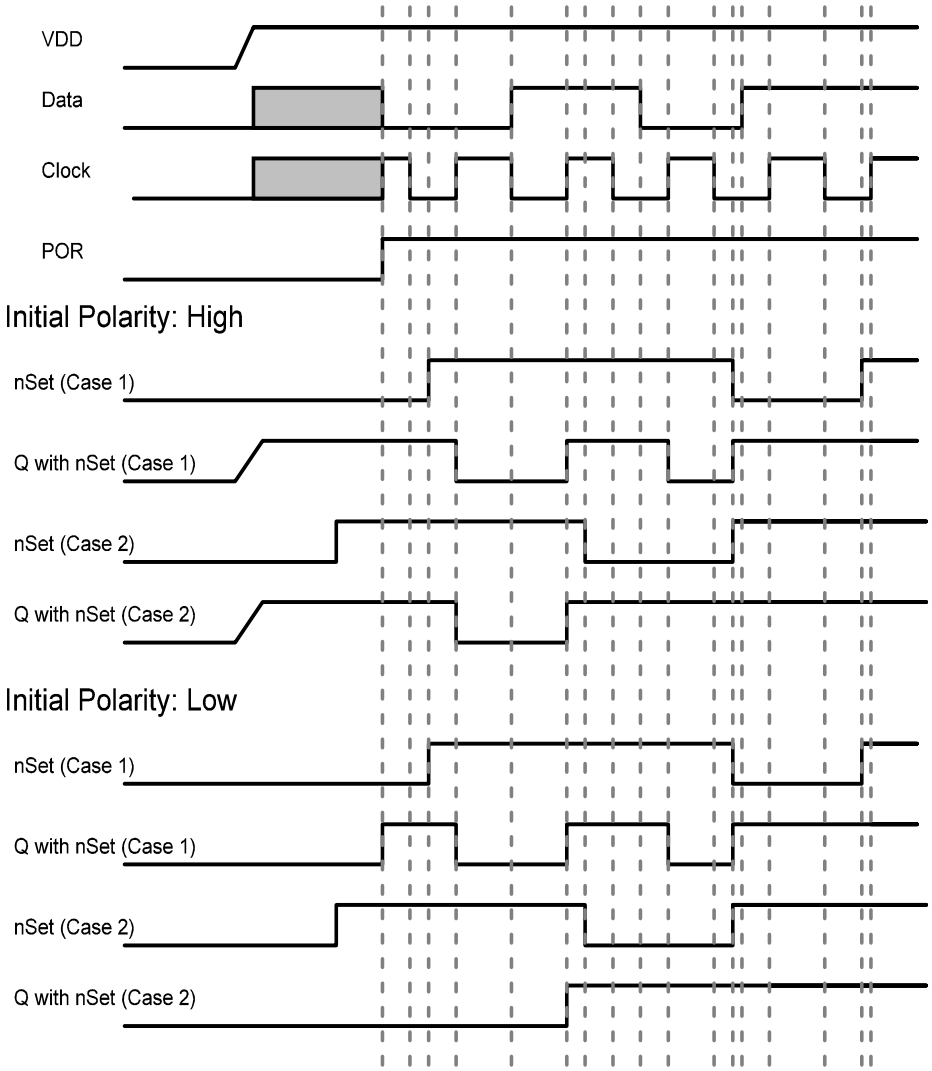

Figure 27. DFF Polarity Operations with nSet

9.5 3-Bit LUT or Pipe Delay Macrocell

There is one macrocell that can serve as either a 3-bit LUT or as a Pipe Delay.

When used to implement LUT functions, the 3-bit LUT take in three input signals from the connection matrix and produces a single output, which goes back into the connection matrix.

When used as a pipe delay, there are three inputs signals from the matrix, Input (IN), Clock (CLK) and Reset (nRST). The pipe delay cell is built from 16 D Flip-Flop logic cells that provide the three output options, two of which are user selectable. The DFF cells are tied in series where the output (Q) of each delay cell goes to the next DFF cell. The first delay option is fixed at the output of the first flip-flop stage. The other two outputs (OUT0 and OUT1) provide user selectable options for 1 – 16 stages of delay There are delay output points for each set of the OUT0 and OUT1 outputs to a 16-input mux that is controlled by reg <1259:1256> for OUT0 and reg <1263:1260> for OUT1. The 16-input mux is used to select the amount of delay.

The overall time of the delay is based on the clock used in the SLG46534 design. Each DFF cell has a time delay of the inverse of the clock time (either external clock or the RC Oscillator within the SLG46534). The sum of the number of DFF cells used will be the total time delay of the Pipe Delay logic cell.

Note: CLK is rising edge triggered.

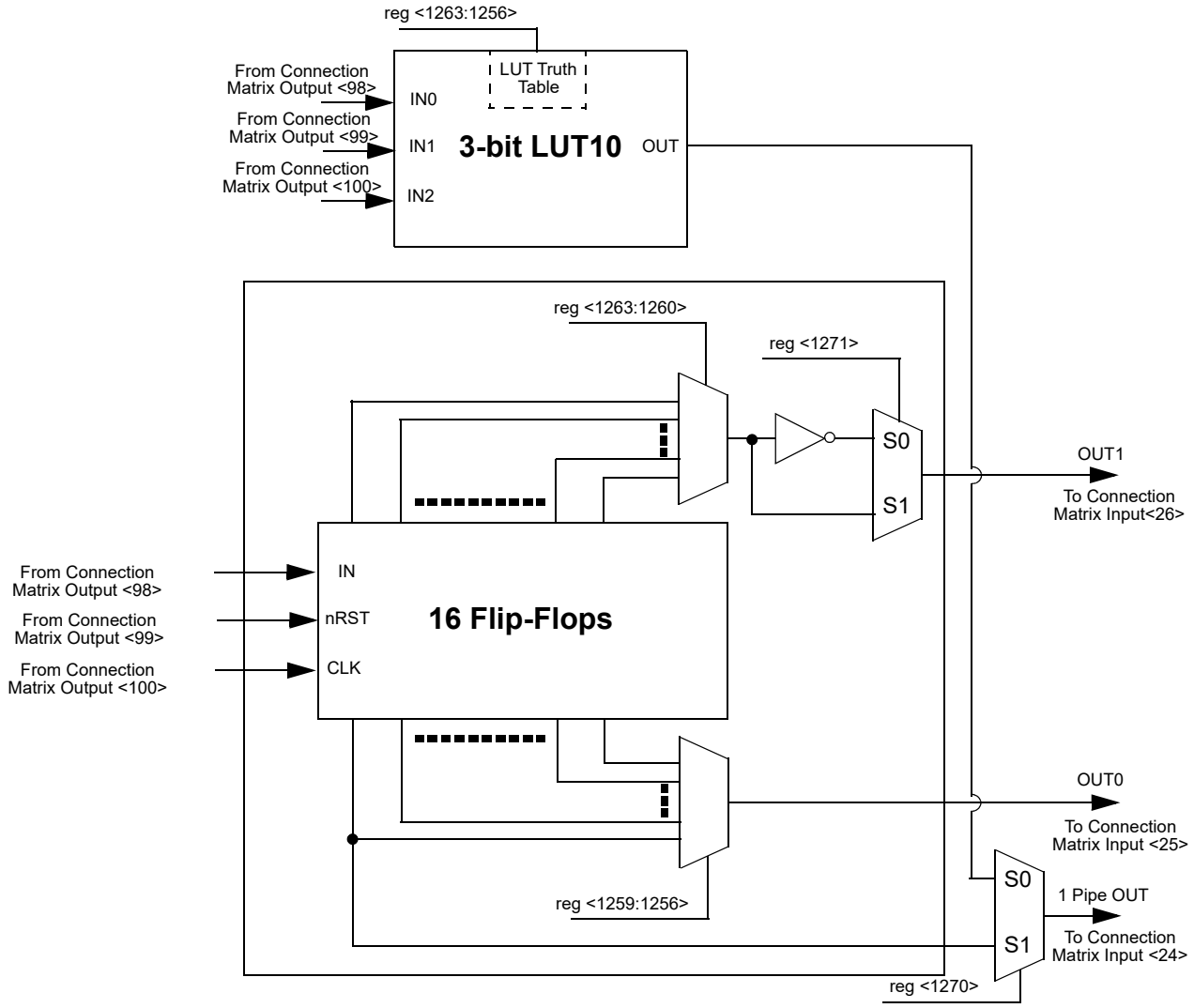

Figure 28. 3-bit LUT10 or Pipe Delay

9.5.1 3-Bit LUT or Pipe Delay Macrocells Used as 3-Bit LUTs

Table 54. 3-bit LUT10 Truth Table

IN2	IN1	IN0	OUT	
0	0	0	reg <1256>	LSB
0	0	1	reg <1257>	
0	1	0	reg <1258>	
0	1	1	reg <1259>	
1	0	0	reg <1260>	
1	0	1	reg <1261>	
1	1	0	reg <1262>	
1	1	1	reg <1263>	MSB

Each Macrocell, when programmed for a LUT function, uses a 8-bit register to define their output function:

3-Bit LUT10 is defined by reg<1263:1256>

9.5.2 3-Bit LUT or Pipe Delay Macrocells Used as Pipe Delay Register Settings

Table 55. Pipe Delay Register Settings

Signal Function	Register Bit Address	Register Definition
LUT3_10 or Pipe Delay Output Select	reg<1270>	0: LUT3_10 1: 1 Pipe Delay Output
OUT0 select	reg<1259:1256>	
OUT1 select	reg<1263:1260>	
Pipe delay OUT1 Polarity Select Bit	reg<1271>	0: Non-inverted 1: Inverted

9.6 3-Bit LUT or 8-Bit Counter / Delay Macrocells

There are five macrocells that can serve as either 3-bit LUTs or as Counter / Delays. When used to implement LUT function, the 3-bit LUT takes in three input signals from the connection matrix and produces a single output, which goes back into the connection matrix. When used to implement 8-Bit Counter / Delay function, two of the three input signals from the connection matrix go to the external clock (ext_clk) and reset (DLY_in/CNT_Reset) for the counter/delay, with the output going back to the connection matrix.

These macrocells can also operate in a one-shot mode, which will generate an output pulse of user-defined width.

These macrocells can also operate in a frequency detection or edge detection mode.

For timing diagrams refer to section *9.8 CNT/DLY/FSM Timing Diagrams*

Two of the five macrocells can have their active count value read via I^2C (CNT4 and CNT6). See Section *19.5.1.2 Reading Counter Data via I2C* for further details.

9.6.1 3-Bit LUT or 8- Bit CNT/DLY Block Diagrams

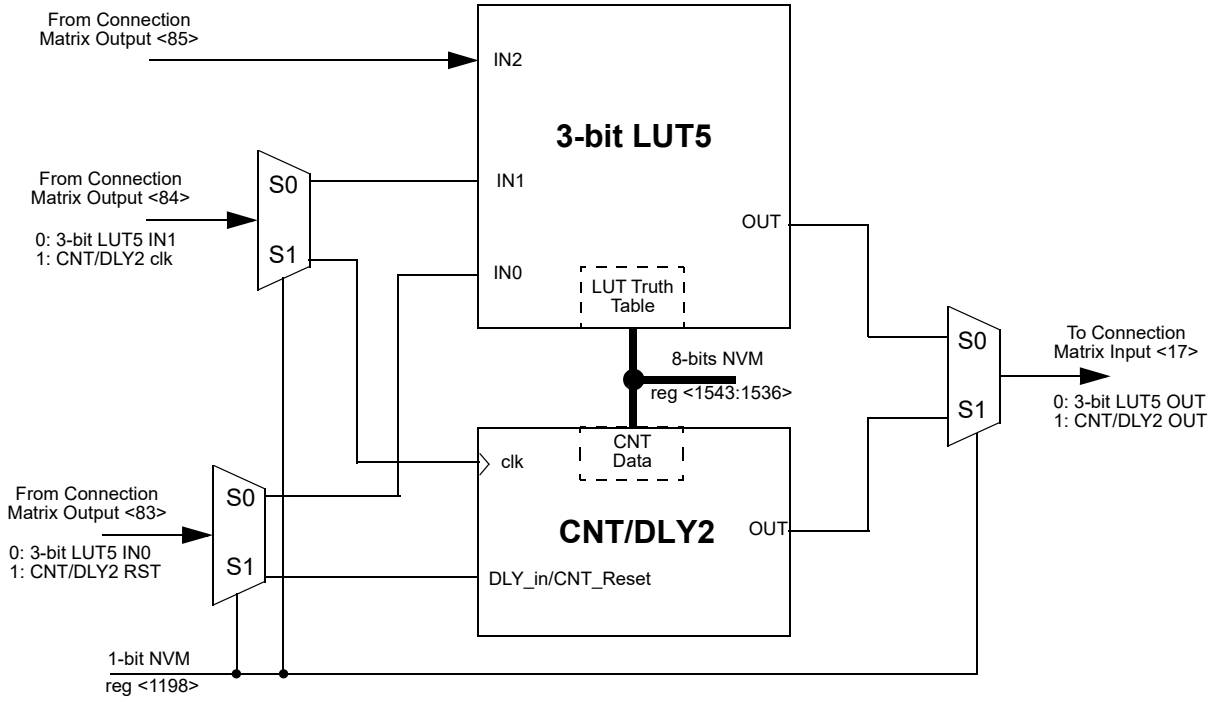

Figure 29. 3-bit LUT5 or CNT/DLY2

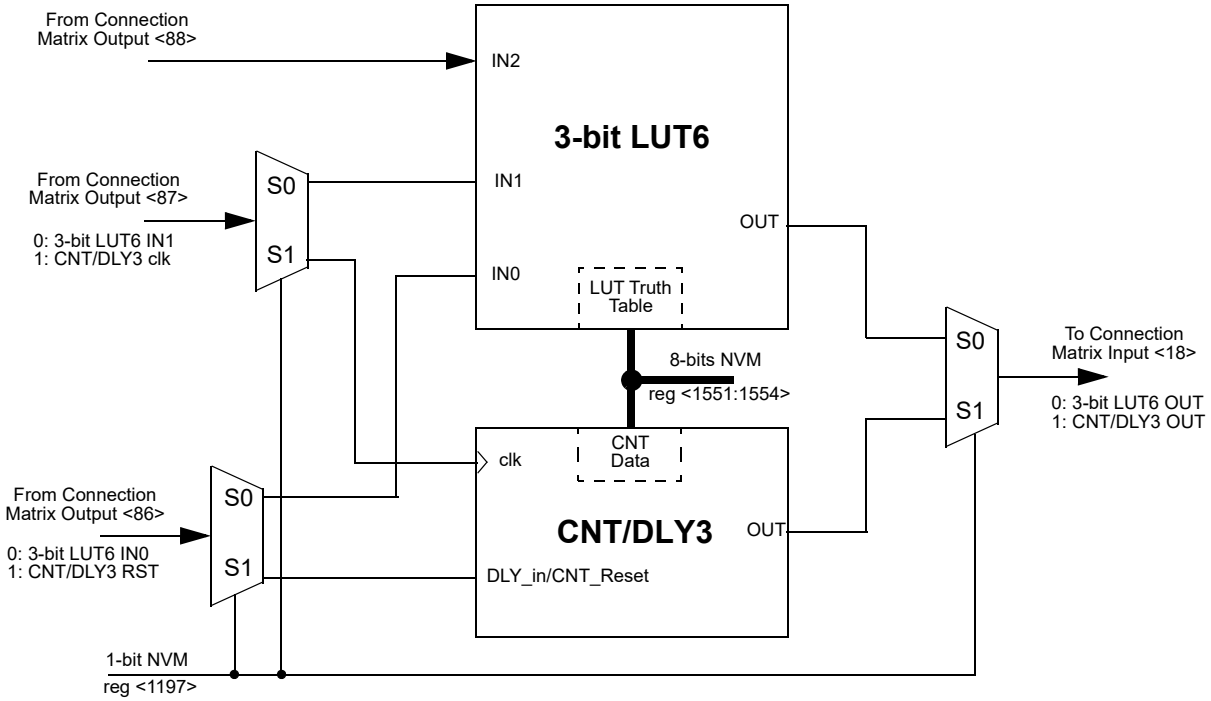

Figure 30. 3-bit LUT6 or CNT/DLY3

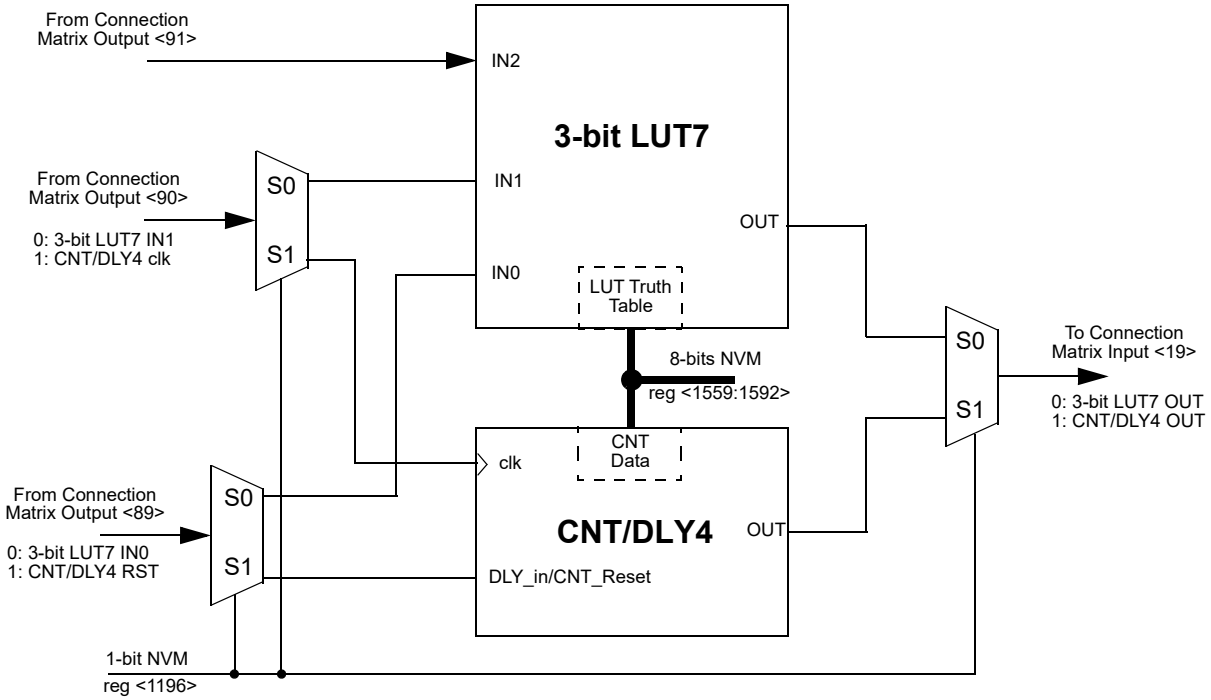

Figure 31. 3-bit LUT7 or CNT/DLY4

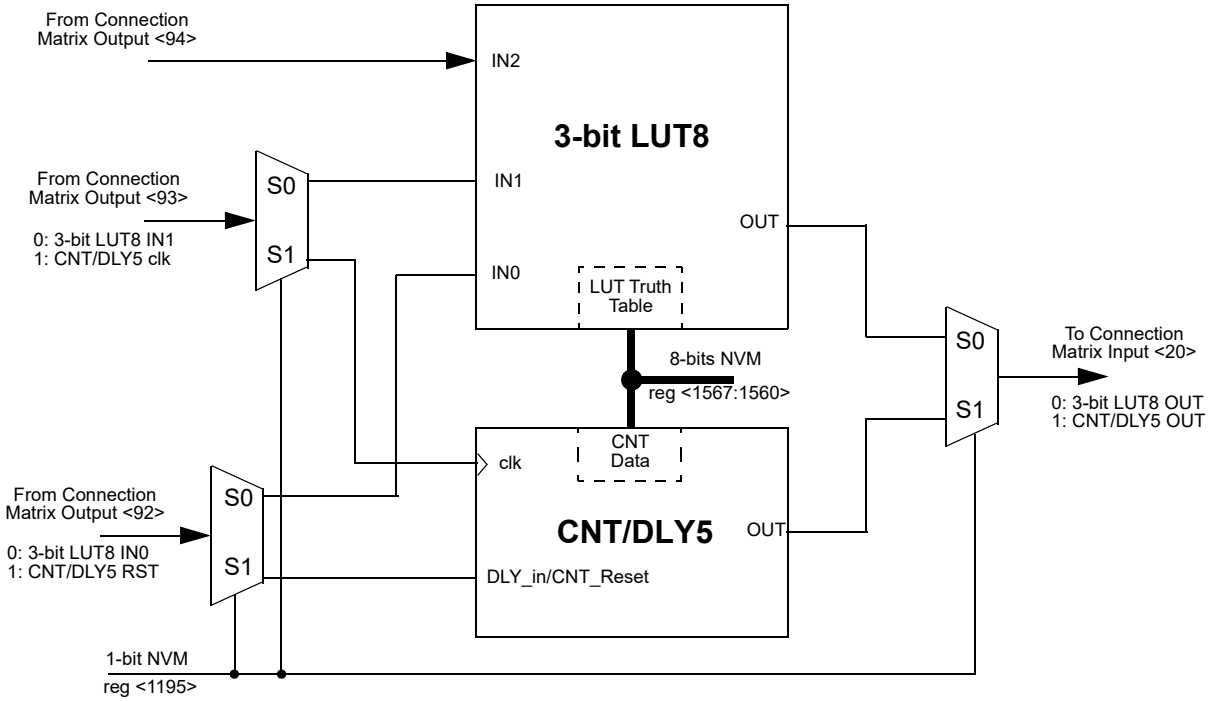

Figure 32. 3-bit LUT8 or CNT/DLY5

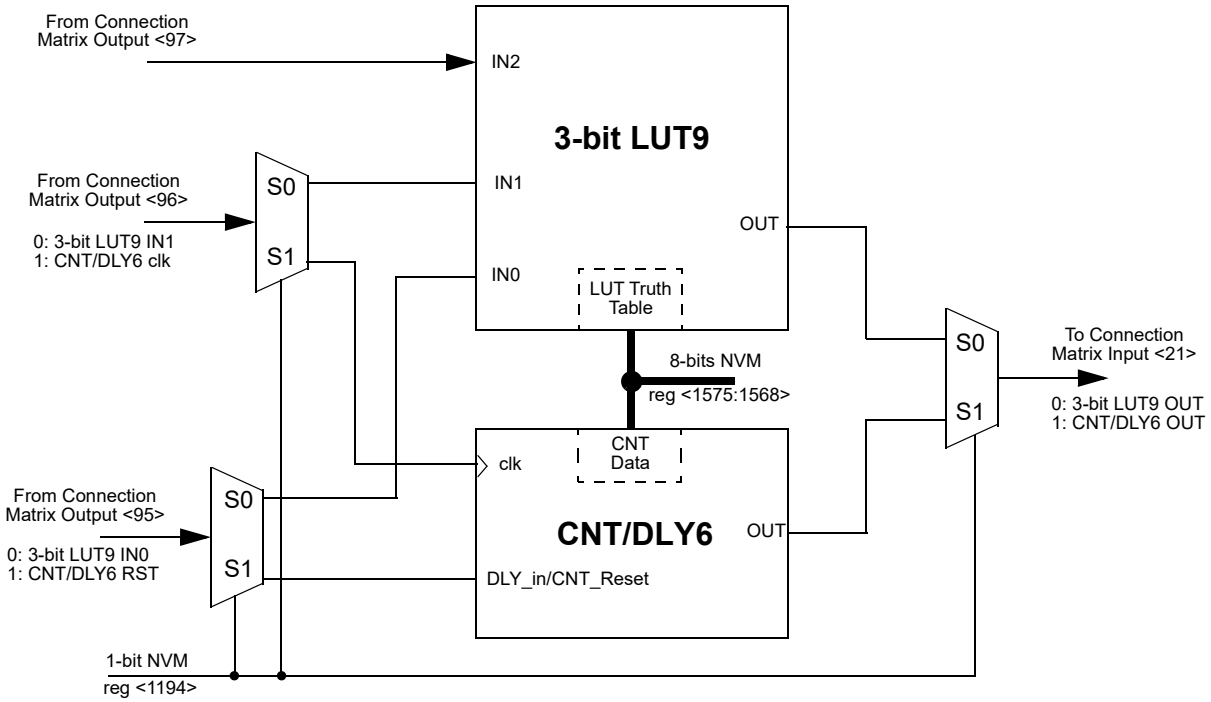

Figure 33. 3-bit LUT9 or CNT/DLY6

9.6.2 3-Bit LUT or CNT/DLYs Used as 3-Bit LUTs

Table 56. 3-bit LUT5 Truth Table

IN2	IN1	IN0	OUT	
0	0	0	reg <1536>	LSB
0	0	1	reg <1537>	
0	1	0	reg <1538>	
0	1	1	reg <1539>	
1	0	0	reg <1540>	
1	0	1	reg <1541>	
1	1	0	reg <1542>	
1	1	1	reg <1543>	MSB

Table 57. 3-bit LUT6 Truth Table

IN2	IN1	IN0	OUT	
0	0	0	reg <1544>	LSB
0	0	1	reg <1545>	
0	1	0	reg <1546>	
0	1	1	reg <1547>	
1	0	0	reg <1548>	
1	0	1	reg <1549>	
1	1	0	reg <1550>	
1	1	1	reg <1551>	MSB

Table 58. 3-bit LUT7 Truth Table

IN2	IN1	IN0	OUT	
0	0	0	reg <1552>	LSB
0	0	1	reg <1553>	
0	1	0	reg <1554>	
0	1	1	reg <1555>	
1	0	0	reg <1556>	
1	0	1	reg <1557>	
1	1	0	reg <1558>	
1	1	1	reg <1559>	MSB

Table 59. 3-bit LUT8 Truth Table

IN2	IN1	IN0	OUT	
0	0	0	reg <1560>	LSB
0	0	1	reg <1561>	
0	1	0	reg <1562>	
0	1	1	reg <1563>	
1	0	0	reg <1564>	
1	0	1	reg <1565>	
1	1	0	reg <1566>	
1	1	1	reg <1567>	MSB

Table 60. 3-bit LUT9 Truth Table

IN2	IN1	IN0	OUT	
0	0	0	reg <1568>	LSB
0	0	1	reg <1569>	
0	1	0	reg <1570>	
0	1	1	reg <1571>	
1	0	0	reg <1572>	
1	0	1	reg <1573>	
1	1	0	reg <1574>	
1	1	1	reg <1575>	MSB

Each Macrocell, when programmed for a LUT function, uses a 8-bit register to define their output function:

3-Bit LUT5 is defined by reg<1543:1536>

3-Bit LUT6 is defined by reg<1551:1544>

3-Bit LUT7 is defined by reg<1559:1552>

3-Bit LUT8 is defined by reg<1567:1560>

3-Bit LUT9 is defined by reg<1575:1568>

9.6.3 3-Bit LUT or 8-Bit Counter / Delay Macrocells Used as 8-Bit Counter / Delay Register Settings

Table 61. CNT/DLY2 Register Settings

Signal Function	Register Bit Address	Register Definition
LUT3_5 or Counter2 Select	reg<1198>	0: LUT3_5 1: Counter2
Delay2 Mode Select or asynchronous counter reset	reg<1273:1272>	00: on both falling and rising edges (for delay & counter reset) 01: on falling edge only (for delay & counter reset) 10: on rising edge only (for delay & counter reset) 11: no delay on either falling or rising edges / counter high level reset
Counter/delay2 Clock Source Select	reg<1276:1274>	000: Internal OSC clock 001: OSC/4 010: OSC/12 011: OSC/24 100: OSC/64 101: 25MHz OSC clock 110: External Clock 111: Counter1 Overflow
Counter/delay2 Output Selection for Counter mode	reg<1277>	0: Default Output 1: Edge Detector Output
Counter/delay2 Mode Selection	reg<1279:1278>	00: Delay mode 01: One Shot 10: Freq. Detect 11: Counter mode
Counter/delay2 Control Data	reg<1543:1536>	1 – 255

Table 62. CNT/DLY3 Register Settings

Signal Function	Register Bit Address	Register Definition
LUT3_6 or Counter3 Select	reg<1197>	0: LUT3_6 1: Counter3
Delay3 Mode Select or asynchronous counter reset	reg<1281:1280>	00: on both falling and rising edges (for delay & counter reset) 01: on falling edge only (for delay & counter reset) 10: on rising edge only (for delay & counter reset) 11: no delay on either falling or rising edges / counter high level reset
Counter/delay3 Clock Source Select	reg<1284:1282>	000: Internal OSC clock 001: OSC/4 010: OSC/12 011: OSC/24 100: OSC/64 101: 25MHz OSC clock 110: External Clock 111: Counter2 Overflow
Counter/delay3 Output Selection for Counter mode	reg<1285>	0: Default Output 1: Edge Detector Output
Counter/delay2 Mode Selection	reg<1287:1286>	00: Delay mode 01: One Shot 10: Freq. Detect 11: Counter mode
Counter/delay3 Control Data	reg<1551:1544>	1 – 255

Table 63. CNT/DLY4 Register Settings

Signal Function	Register Bit Address	Register Definition
LUT3_7 or Counter4 Select	reg<1196>	0: LUT3_7 1: Counter4
Delay4 Mode Select or asynchronous counter reset	reg<1289:1288>	00: on both falling and rising edges (for delay & counter reset) 01: on falling edge only (for delay & counter reset) 10: on rising edge only (for delay & counter reset) 11: no delay on either falling or rising edges / counter high level reset
Counter/delay4 Clock Source Select	reg<1292:1290>	000: Internal OSC clock 001: OSC/4 010: OSC/12 011: OSC/24 100: OSC/64 101: 25MHz OSC clock 110: External Clock 111: Counter3 Overflow
Counter/delay4 Output Selection for Counter mode	reg<1293>	0: Default Output 1: Edge Detector Output
Counter/delay4 Mode Selection	reg<1295:1294>	00: Delay mode 01: One Shot 10: Freq. Detect 11: Counter mode
Counter/delay4 Control Data	reg<1559:1552>	1 – 255

Table 64. CNT/DLY5 Register Settings

Signal Function	Register Bit Address	Register Definition
LUT3_8 or Counter5 Select	reg<1195>	0: LUT3_8 1: Counter5
Delay5 Mode Select or asynchronous counter reset	reg<1297:1296>	00: on both falling and rising edges (for delay & counter reset) 01: on falling edge only (for delay & counter reset) 10: on rising edge only (for delay & counter reset) 11: no delay on either falling or rising edges / counter high level reset
Counter/delay5 Clock Source Select	reg<1300:1298>	000: Internal OSC clock 001: OSC/4 010: OSC/12 011: OSC/24 100: OSC/64 101: 25 MHz OSC clock 110: External Clock 111: Counter4 Overflow
Counter/delay5 Output Selection for Counter mode	reg<1301>	0: Default Output 1: Edge Detector Output
Counter/delay5 Mode Selection	reg<1303:1302>	00: Delay mode 01: One Shot 10: Freq. Detect 11: Counter mode
Counter/delay5 Control Data	reg<1567:1560>	1 – 255

Table 65. CNT/DLY6 Register Settings

Signal Function	Register Bit Address	Register Definition
LUT3_9 or Counter5 Select	reg<1194>	0: LUT3_9 1: Counter6
Delay6 Mode Select or asynchronous counter reset	reg<1305:1304>	00: on both falling and rising edges (for delay & counter reset) 01: on falling edge only (for delay & counter reset) 10: on rising edge only (for delay & counter reset) 11: no delay on either falling or rising edges / counter high level reset
Counter/delay6 Clock Source Select	reg<1308:1306>	000: Internal OSC clock 001: OSC/4 010: OSC/12 011: OSC/24 100: OSC/64 101: 25 MHz OSC clock 110: External Clock 111: Counter5 Overflow
Counter/delay6 Output Selection for Counter mode	reg<1309>	0: Default Output 1: Edge Detector Output
Counter/delay6 Mode Selection	reg<1311:1310>	00: Delay mode 01: One Shot 10: Freq. Detect 11: Counter mode
Counter/delay6 Control Data	reg<1575:1568>	1 – 255

9.7 4-Bit LUT or 16-Bit Counter / Delay Macrocells

There are two macrocells that can serve as either 4-bit LUTs or as 16-bit Counter / Delays. When used to implement LUT function, the 4-bit LUT takes in four input signals from the Connection Matrix and produces a single output, which goes back into the Connection Matrix. When used to implement 16-Bit Counter / Delay function, four input signals from the connection matrix go to the external clock (ext_clk), reset (DLY_in/CNT_Reset), Keep and Up for the counter/delay, with the output going back to the connection matrix.

These two macrocells have an optional Finite State Machine (FSM) function. There are two matrix inputs for Up and Keep to support FSM functionality. Any counter within Green PAK is counting down by default. In FSM mode (CNT/DLY0 and CNT/DLY1) it is possible to reverse counting by applying High level to Up input. Also, there is a possibility to pause counting by applying High level to Keep input, after the level goes Low, the counter will proceed counting.

These macrocells can also operate in a one-shot mode, which will generate an output pulse of user-defined width.

These macrocells can also operate in a frequency detection.

Delay time and Output Period can be calculated using the following formulas:

- Delay time: [(Counter data + 2) / CLK input frequency – Offset*];
- Output Period: [(Counter data + 1) / CLK input frequency – Offset*].

One Shot pulse width can be calculated using formula:

- Pulse width = [(Counter Data + 2) / CLK input frequency – Offset*];

*Offset is the asynchronous time offset between the input signal and the first clock pulse.

For timing diagrams refer to section *9.8 CNT/DLY/FSM Timing Diagrams.*

Both of these macrocells can have their active count value read via I^2C. See Section *19.5.1.2 Reading Counter Data via I2C* for further details.

9.7.1 4-Bit LUT or 16-Bit CNT/DLY Block Diagram

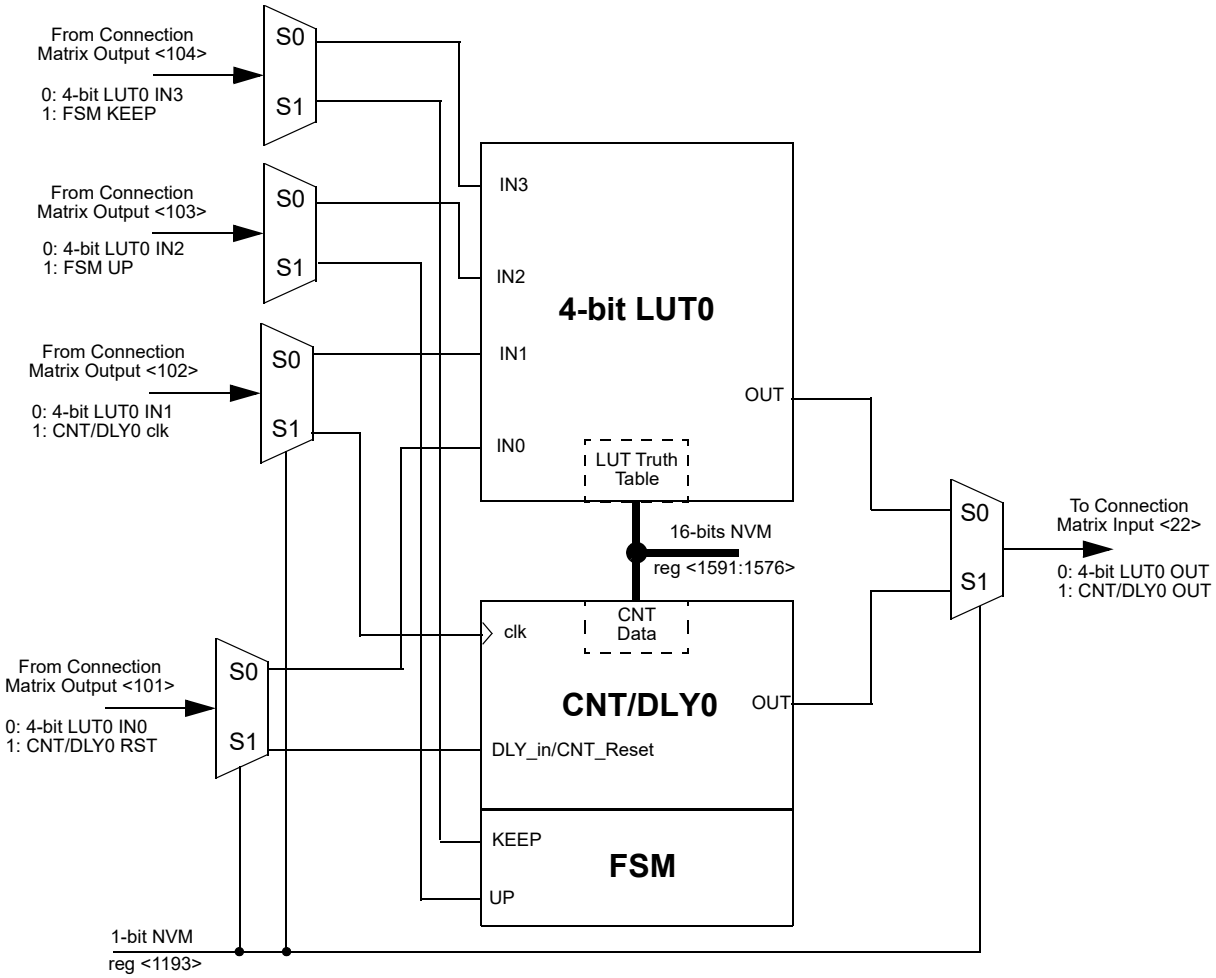

Figure 34. 4-bit LUT0 or CNT/DLY0

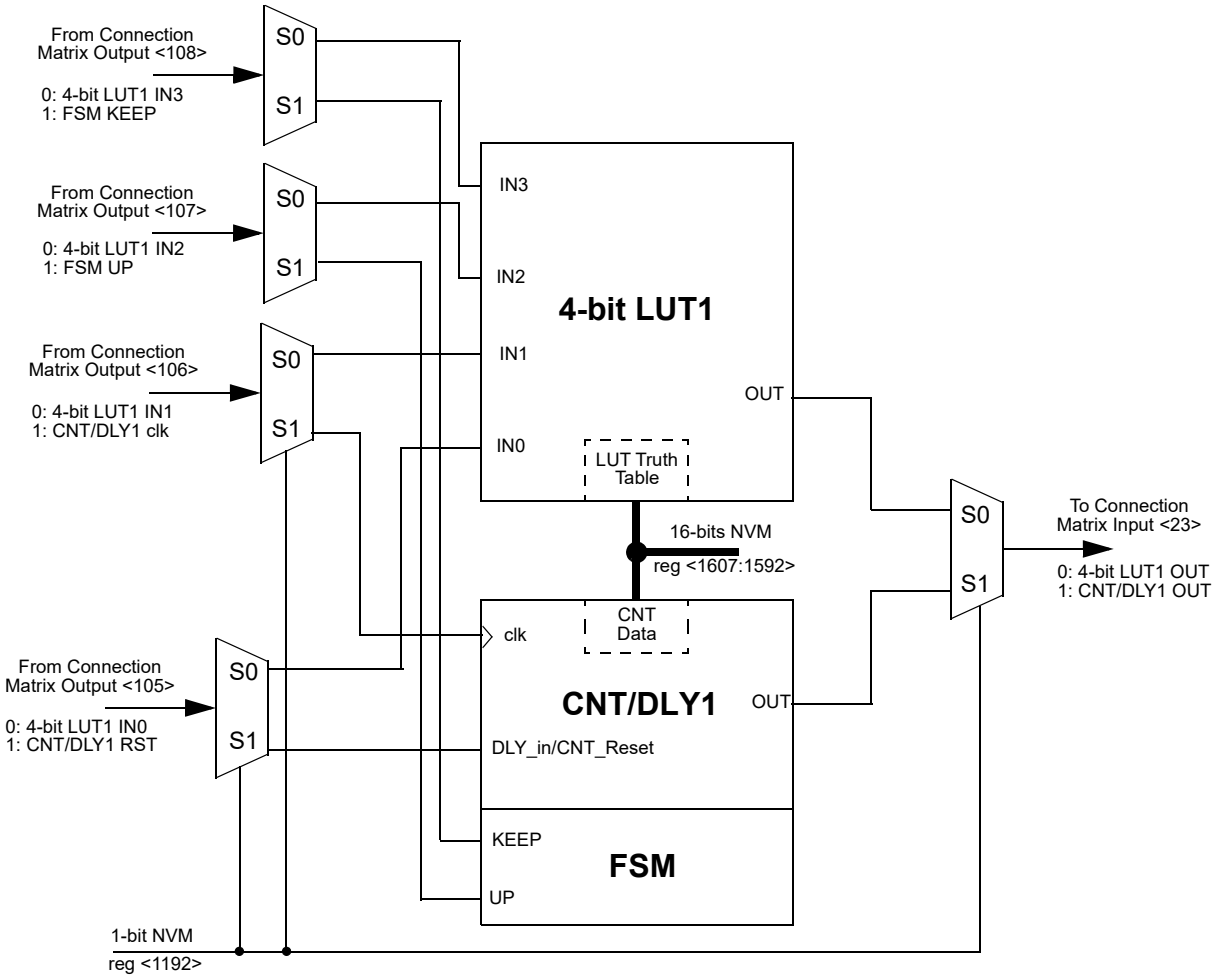

Figure 35. 4-bit LUT1 or CNT/DLY1

9.7.2 4-Bit LUT or 16-Bit Counter / Delay Macrocells Used as 4-Bit LUTs

Table 66. 4-bit LUT0 Truth Table.

IN3	IN2	IN1	IN0	OUT	
0	0	0	0	reg <1576>	LSB
0	0	0	1	reg <1577>	
0	0	1	0	reg <1578>	
0	0	1	1	reg <1579>	
0	1	0	0	reg <1580>	
0	1	0	1	reg <1581>	
0	1	1	0	reg <1582>	
0	1	1	1	reg <1583>	
1	0	0	0	reg <1584>	
1	0	0	1	reg <1585>	
1	0	1	0	reg <1586>	
1	0	1	1	reg <1587>	
1	1	0	0	reg <1588>	
1	1	0	1	reg <1589>	
1	1	1	0	reg <1590>	
1	1	1	1	reg <1591>	MSB

Table 67. 4-bit LUT1 Truth Table.

IN3	IN2	IN1	IN0	OUT	
0	0	0	0	reg <1592>	LSB
0	0	0	1	reg <1593>	
0	0	1	0	reg <1594>	
0	0	1	1	reg <1595>	
0	1	0	0	reg <1596>	
0	1	0	1	reg <1597>	
0	1	1	0	reg <1598>	
0	1	1	1	reg <1599>	
1	0	0	0	reg <1600>	
1	0	0	1	reg <1601>	
1	0	1	0	reg <1602>	
1	0	1	1	reg <1603>	
1	1	0	0	reg <1604>	
1	1	0	1	reg <1605>	
1	1	1	0	reg <1606>	
1	1	1	1	reg <1607>	MSB

Each Macrocell, when programmed for a LUT function, uses a 16-bit register to define their output function:

4-Bit LUT0 is defined by reg<1591:1576>

4-Bit LUT1 is defined by reg<1607:1592>

Table 68. 4-bit LUT Standard Digital Functions

Function	MSB															LSB
AND-4	1	0	0	0	0	0	0	0	0	0	0	0	0	0	0	0
NAND-4	0	1	1	1	1	1	1	1	1	1	1	1	1	1	1	1
OR-4	1	1	1	1	1	1	1	1	1	1	1	1	1	1	1	0
NOR-4	0	0	0	0	0	0	0	0	0	0	0	0	0	0	0	1
XOR-4	0	1	1	0	1	0	0	1	1	0	0	1	0	1	1	0
XNOR-4	1	0	0	1	0	1	1	0	0	1	1	0	1	0	0	1

9.7.3 4-Bit LUT or 16-Bit Counter / Delay Macrocells Used as 16-Bit Counter / Delay Register Settings

Table 69. CNT/DLY0 Register Settings

Signal Function	Register Bit Address	Register Definition
LUT4_0 or Counter0 Select	reg<1193>	0: LUT4_0 1: Counter0
Delay0 Mode Select or asynchronous counter reset	reg<1313:1312>	00: on both falling and rising edges (for delay & counter reset) 01: on falling edge only (for delay & counter reset) 10: on rising edge only (for delay & counter reset) 11: no delay on either falling or rising edges / counter high level reset
Counter/delay0 Clock Source Select	reg<1316:1314>	000: Internal OSC clock 001: OSC/4 010: OSC/12 011: OSC/24 100: OSC/64 101: 25 MHz OSC clock 110: External Clock 111: Counter6 Overflow
CNT0/FSM0's Q are Set to data or Reset to 0s Selection	reg<1317>	0: Reset to 0s 1: Set to control data
Counter/delay0 Mode Selection	reg<1319:1318>	00: Delay mode 01: One Shot 10: Freq. Detect 11: Counter mode
Counter/delay0 Control Data	reg<1591:1576>	1 - 16535

Table 70. CNT/DLY1 Register Settings

Signal Function	Register Bit Address	Register Definition
LUT4_1 or Counter1 Select	reg<1192>	0: LUT4_1 1: Counter1
Delay1 Mode Select or asynchronous counter reset	reg<1321:1320>	00: on both falling and rising edges (for delay & counter reset) 01: on falling edge only (for delay & counter reset) 10: on rising edge only (for delay & counter reset) 11: no delay on either falling or rising edges / counter high level reset
Counter/delay1 Clock Source Select	reg<1324:1322>	000: Internal OSC clock 001: OSC/4 010: OSC/12 011: OSC/24 100: OSC/64 101: 25 MHz OSC clock 110: External Clock 111: Counter0 Overflow
CNT0/FSM0's Q are Set to data or Reset to 0s Selection	reg<1325>	0: Reset to 0s 1: Set to control data
Counter/delay1 Mode Selection	reg<1327:1326>	00: Delay mode 01: One Shot 10: Freq. Detect 11: Counter mode
Counter/delay1 Control Data	reg<1607:1592>	1 - 16535

9.8 CNT/DLY/FSM Timing Diagrams

9.8.1 Delay mode (edge select: both, counter data: 3) CNT/DLY2...CNT/DLY6

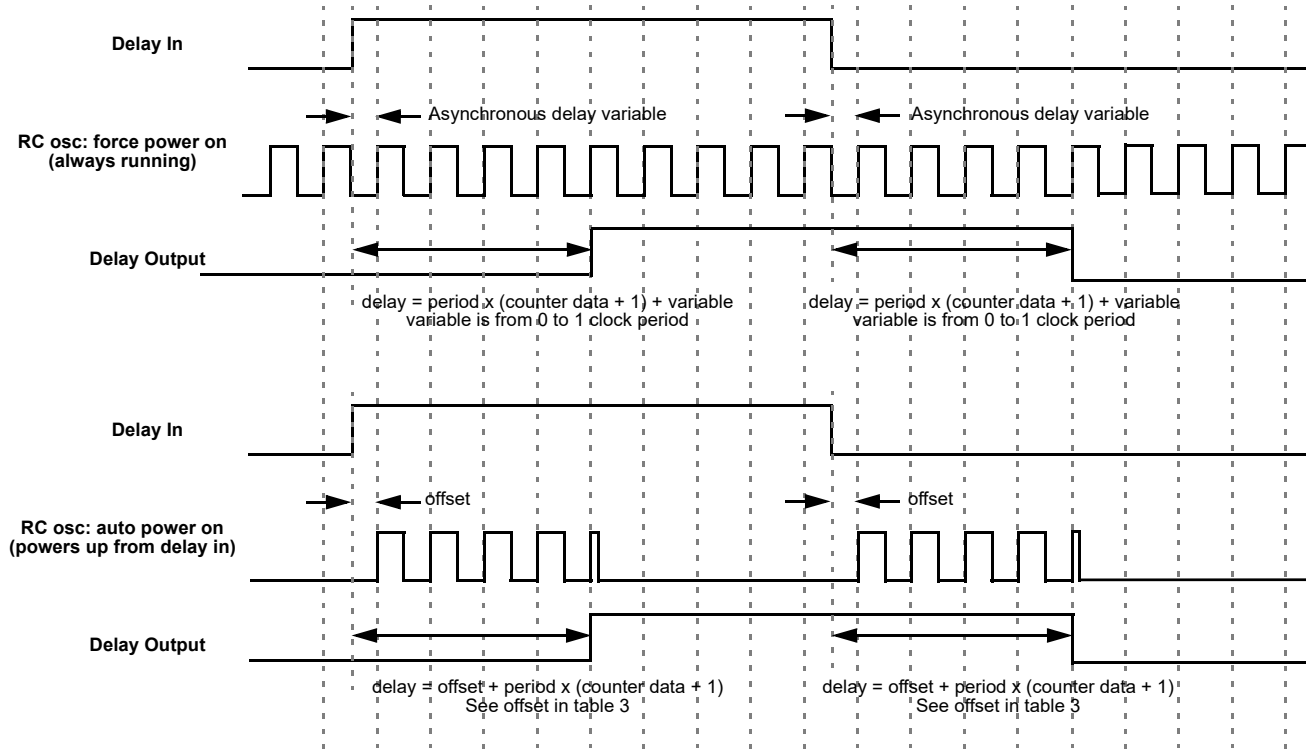

Figure 36. Delay Mode Timing Diagram

9.8.2 Count mode (count data: 3), Counter reset (rising edge detect) CNT/DLY2...CNT/DLY6

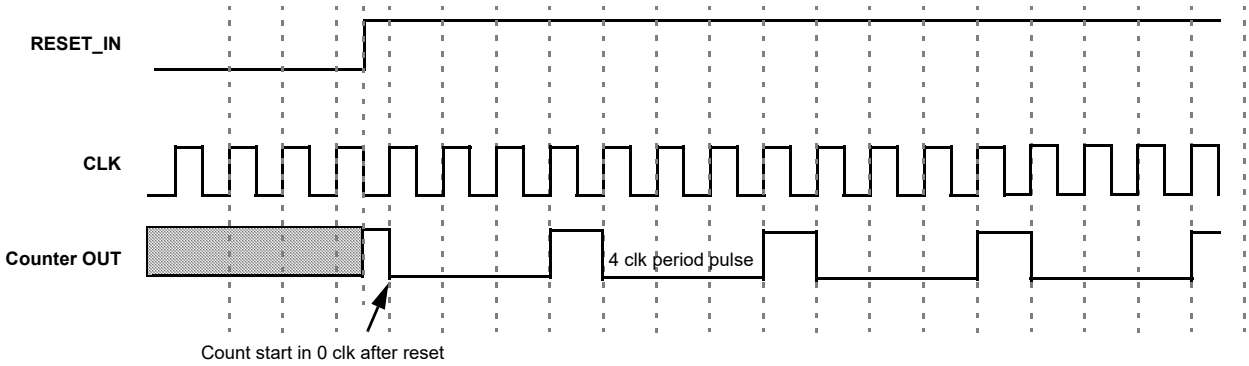

Figure 37. Counter Mode Timing Diagram

9.8.3 One-shot mode CNT/DLY0...CNT/DLY6

This macrocell will generate a pulse whenever a selected edge is detected on its input. Register bits set the edge selection. The pulse width determines by counter data and clock selection properties. The output pulse polarity (non-inverted or inverted) is selected by register bit. See *Table 71.* Any incoming edges will be ignored during the pulse width generation. The following diagram shows one-shot function for non-inverted output.

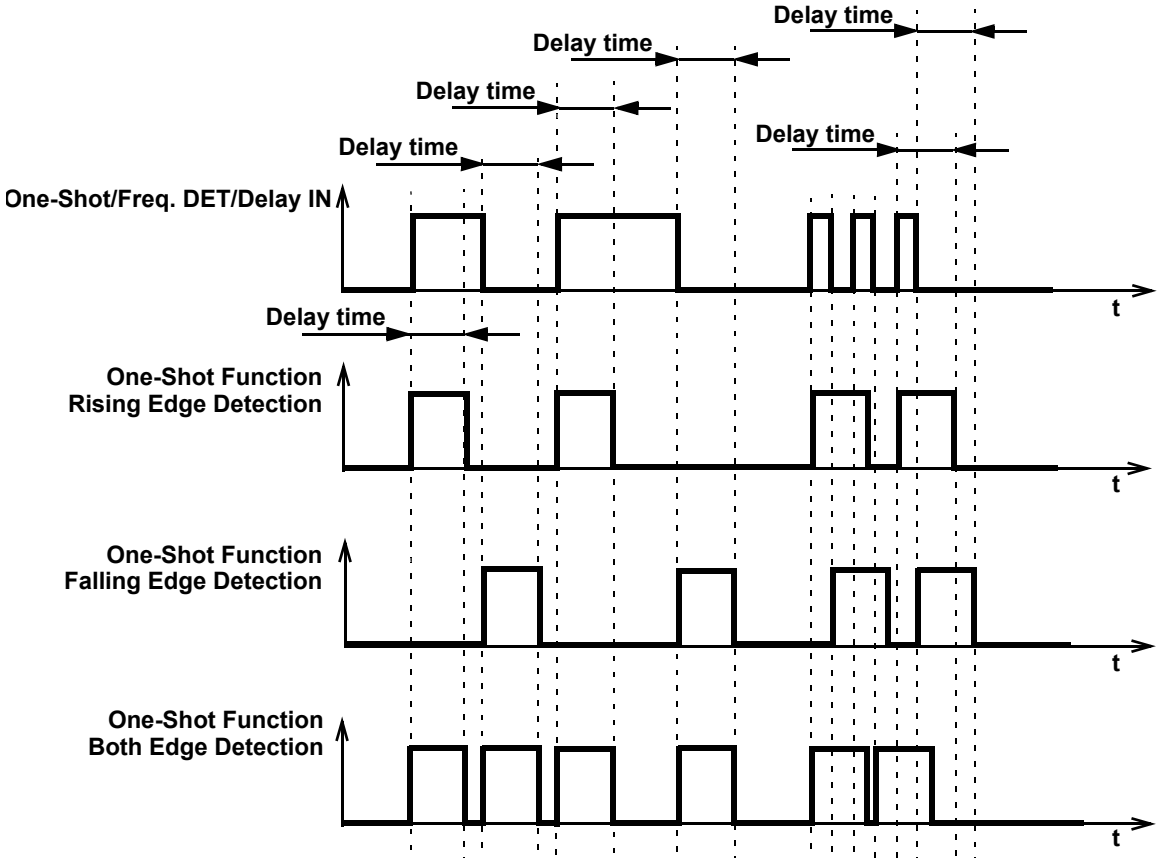

Figure 38. One-Shot Function Timing Diagram

Table 71. DLY/CNTx One-Shot / Freq. Detect Output Polarity

Address		Signal Function	Register Bit Definition	I²C Interface	
Byte	Register Bit			Read	Write
A6	reg<1329>	Select the Polarity of DLY/CNT6's One Shot / Freq. Detect Output	0: Default Output 1: Inverted Output	Valid	Valid
	reg<1330>	Select the Polarity of DLY/CNT5's One Shot / Freq. Detect Output	0: Default Output 1: Inverted Output	Valid	Valid
	reg<1331>	Select the Polarity of DLY/CNT4's One Shot / Freq. Detect Output	0: Default Output 1: Inverted Output	Valid	Valid
	reg<1332>	Select the Polarity of DLY/CNT3's One Shot / Freq. Detect Output	0: Default Output 1: Inverted Output	Valid	Valid
	reg<1333>	Select the Polarity of DLY/CNT2's One Shot / Freq. Detect Output	0: Default Output 1: Inverted Output	Valid	Valid
	reg<1334>	Select the Polarity of DLY/CNT1's One Shot / Freq. Detect Output	0: Default Output 1: Inverted Output	Valid	Valid
	reg<1335>	Select the Polarity of DLY/CNT0's One Shot / Freq. Detect Output	0: Default Output 1: Inverted Output	Valid	Valid

This macrocell generates a high level pulse with a set width (defined by counter data) when detecting the respective edge. It does not restart while pulse is high.

9.8.4 Frequency Detection Mode CNT/DLY0...CNT/DLY6

Rising Edge: The output goes high if the time between two successive edges is less than the delay. The output goes low if the second rising edge has not come after the last rising edge in specified time.

Falling Edge: The output goes high if the time between two falling edges is less than the set time. The output goes low if the second falling edge has not come after the last falling edge in specified time.

Both Edge: The output goes high if the time between the rising and falling edges is less than the set time, which is equivalent to the length of the pulse. The output goes low if after the last rising/falling edge and specified time, the second edge has not come.

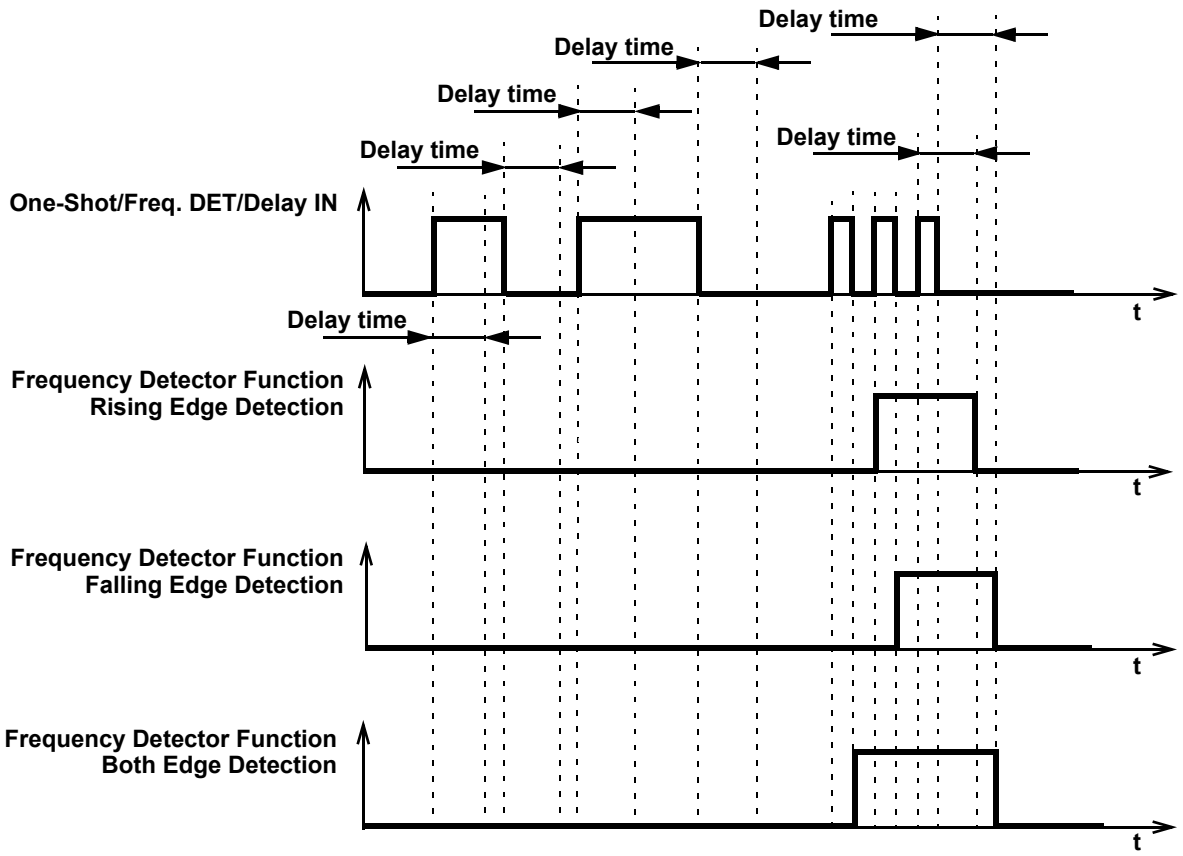

Figure 39. Frequency Detection Mode Timing Diagram

9.8.5 Edge Detection Mode CNT/DLY2...CNT/DLY6

The macrocell generates high level short pulse when detecting the respective edge.See *Table 4. Expected Delays and Widths (typical)*.

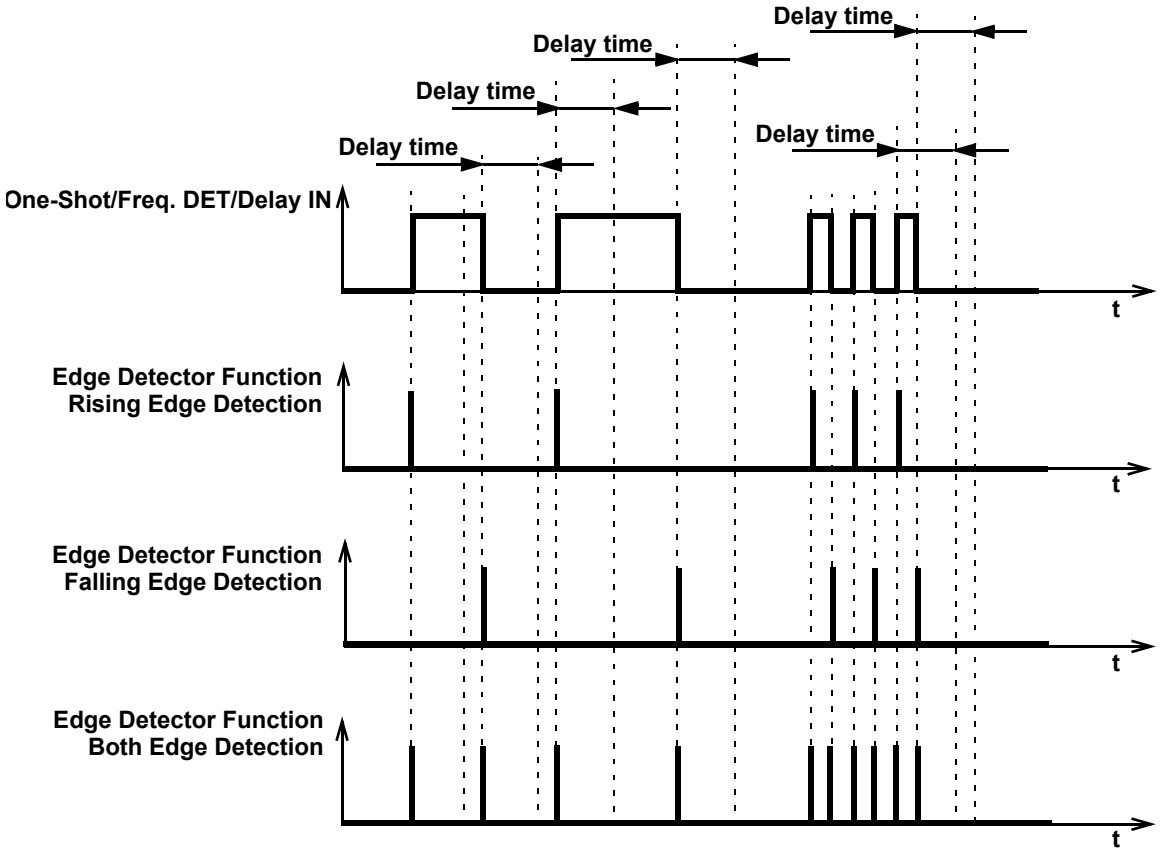

Figure 40. Edge Detection Mode Timing Diagram

9.8.6 Delay Mode CNT/DLY0...CNT/DLY6

The macrocell shifts the respective edge to a set time and restarts by appropriate edge. It works as a filter if the input signal is shorter than the delay time.

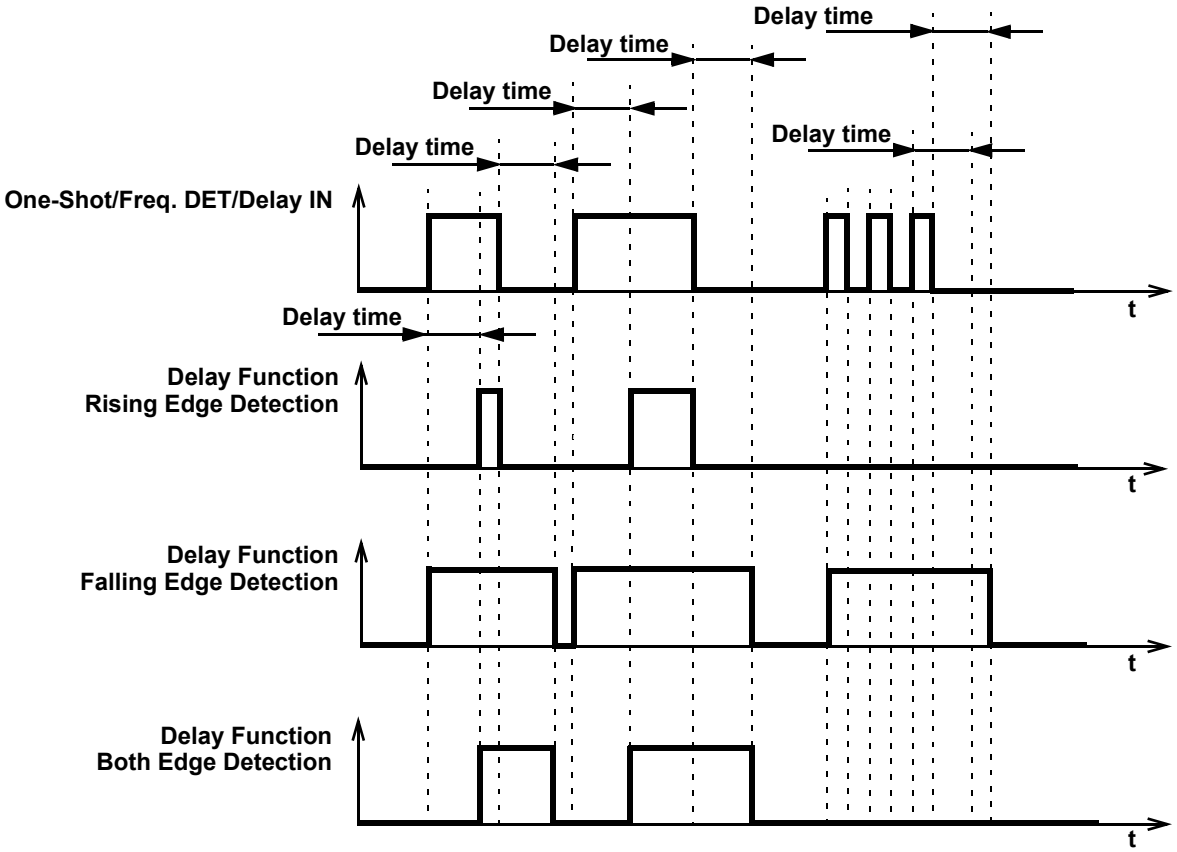

Figure 41. Delay Mode Timing Diagram

9.8.7 CNT/FSM Mode CNT/DLY0, CNT/DLY1

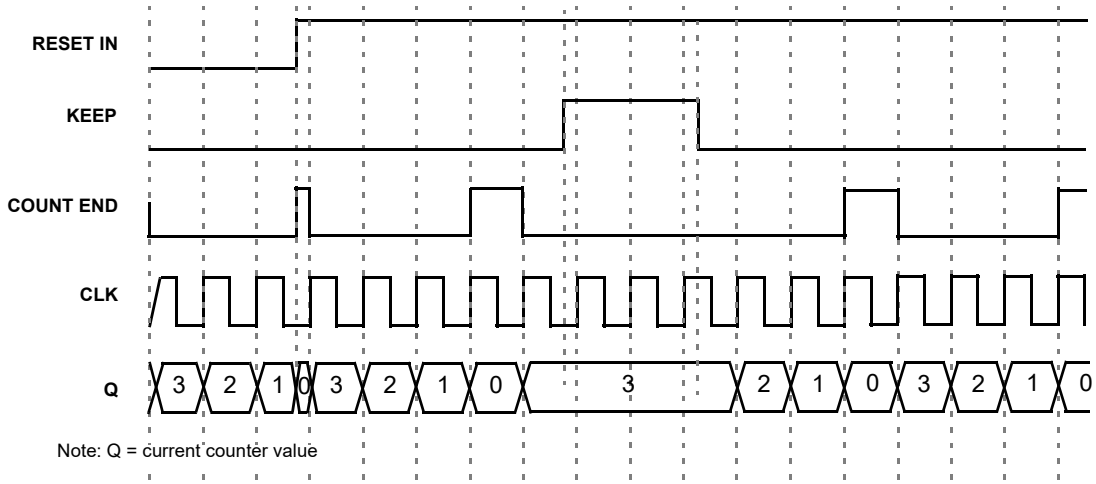

Figure 42. CNT/FSM Timing Diagram (reset rising edge mode, oscillator is forced on, UP=0) for counter data = 3

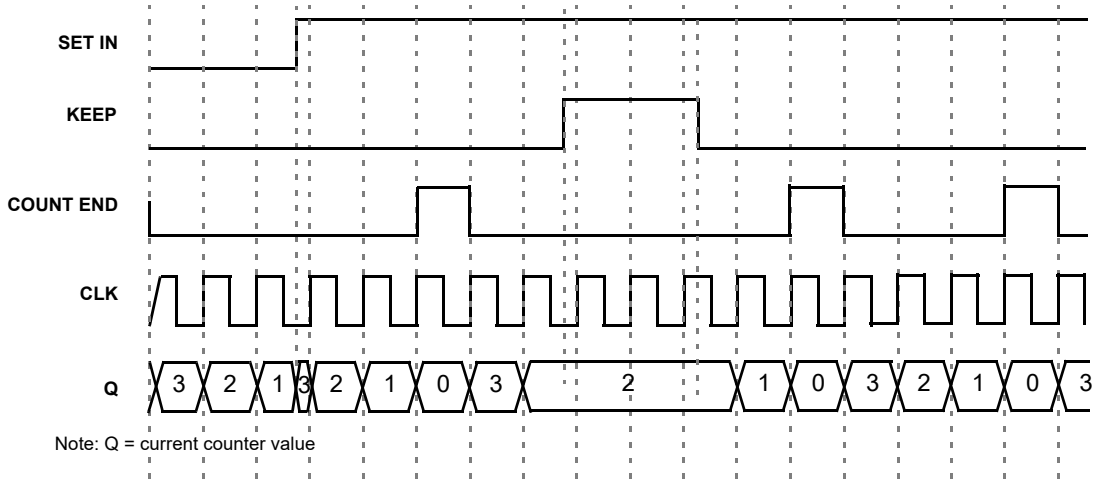

Figure 43. CNT/FSM Timing Diagram (set rising edge mode, oscillator is forced on, UP=0) for counter data = 3

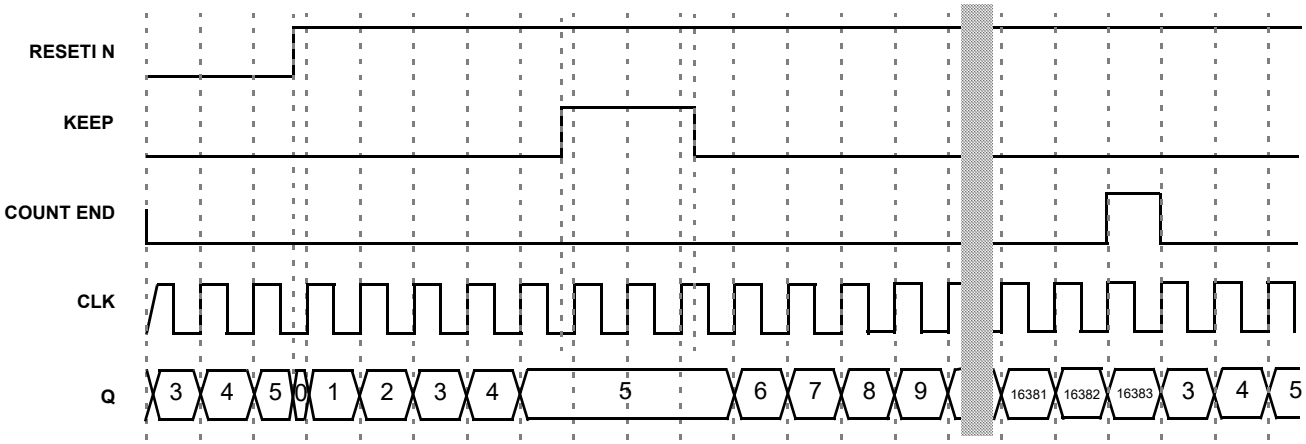

Note: Q = current counter value

Figure 44. CNT/FSM Timing Diagram (reset rising edge mode, oscillator is forced on, UP=1) for counter data = 3

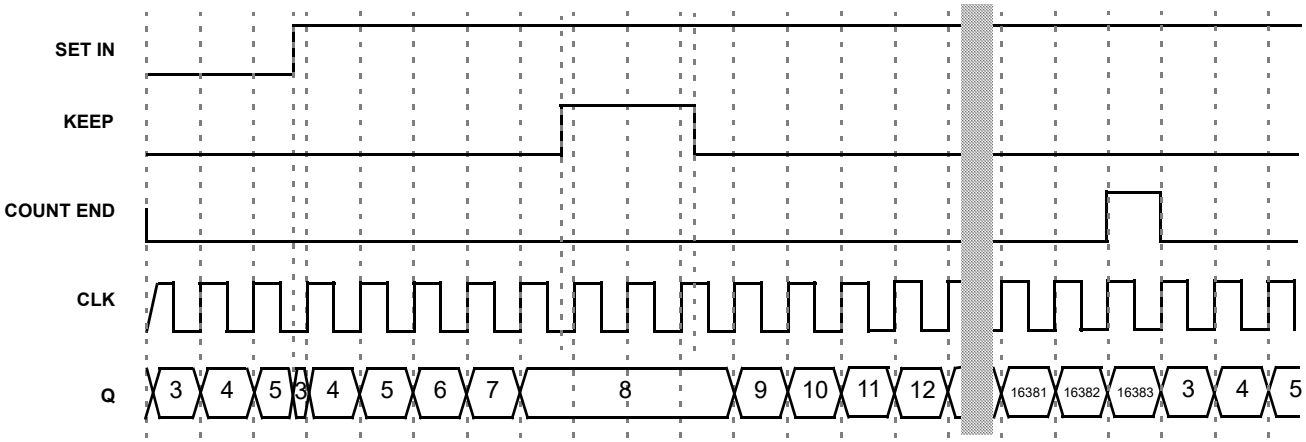

Note: Q = current counter value

Figure 45. CNT/FSM Timing Diagram (set rising edge mode, oscillator is forced on, UP=1) for counter data = 3

9.8.8 Difference in Counter Value for Counter, Delay, One-Shot and Frequency Detect Modes

There is a difference in counter value for Counter and Delay/One-Shot/Frequency Detect modes. The counter value is shifted for two rising edges of the clock signal in Delay/One-Shot/Frequency Detect modes compared to Counter mode. See *Figure 46.*

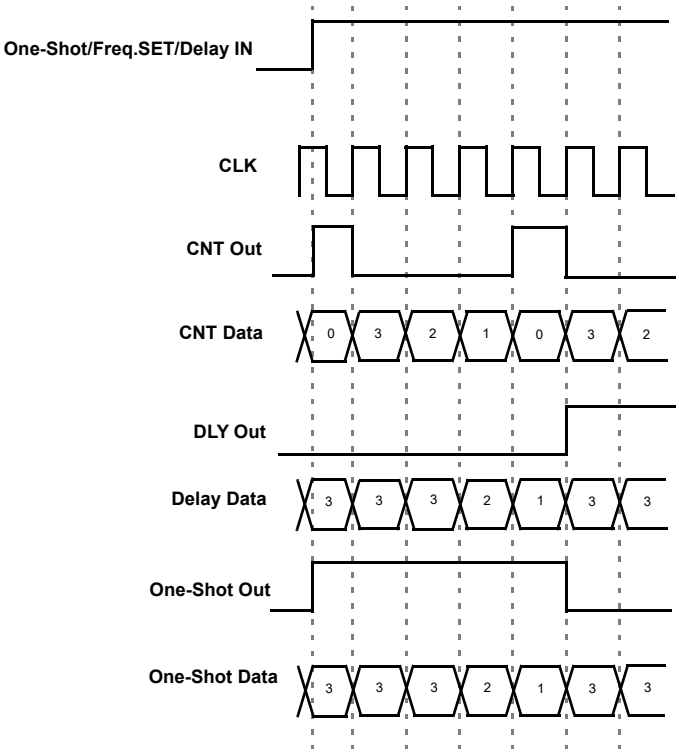

Figure 46. Counter Value, Counter Data = 3

9.9 2-bit LUT or Programmable Pattern Generator

The SLG46534 has one combination function macrocell that can serve as a logic or timing function. This macrocell can serve as a Look Up Table (LUT), or Programmable Pattern Generator (PGEN).

When used to implement LUT functions, the 2-bit LUT takes in two input signals from the connection matrix and produce a single output, which goes back into the connection matrix. When used as a LUT to implement combinatorial logic functions, the outputs of the LUTs can be configured to any user defined function, including the following standard digital logic devices (AND, NAND, OR, NOR, XOR, XNOR). The user can also define the combinatorial relationship between inputs and outputs to be any selectable function.

When operating as a Programmable Pattern Generator, the output of the macrocell with clock out a sequence of two to sixteen bits that are user selectable in their bit values, and user selectable in the number of bits (up to sixteen) that are output before the pattern repeats. See figure *Figure 48.*

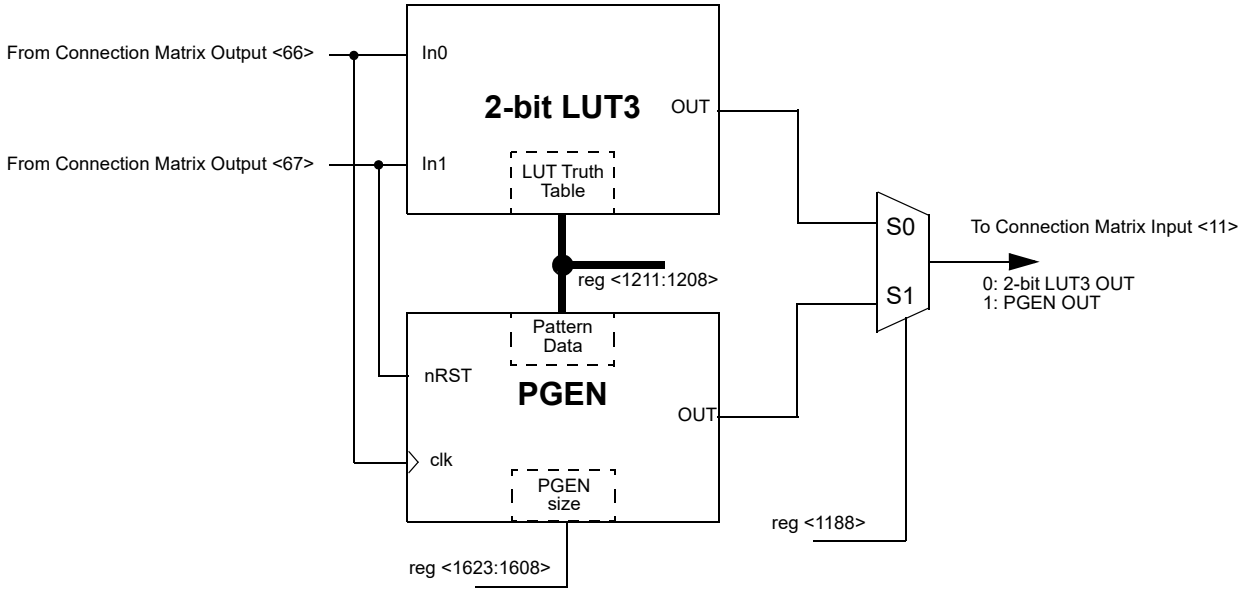

Figure 47. 2-bit LUT2 or PGEN

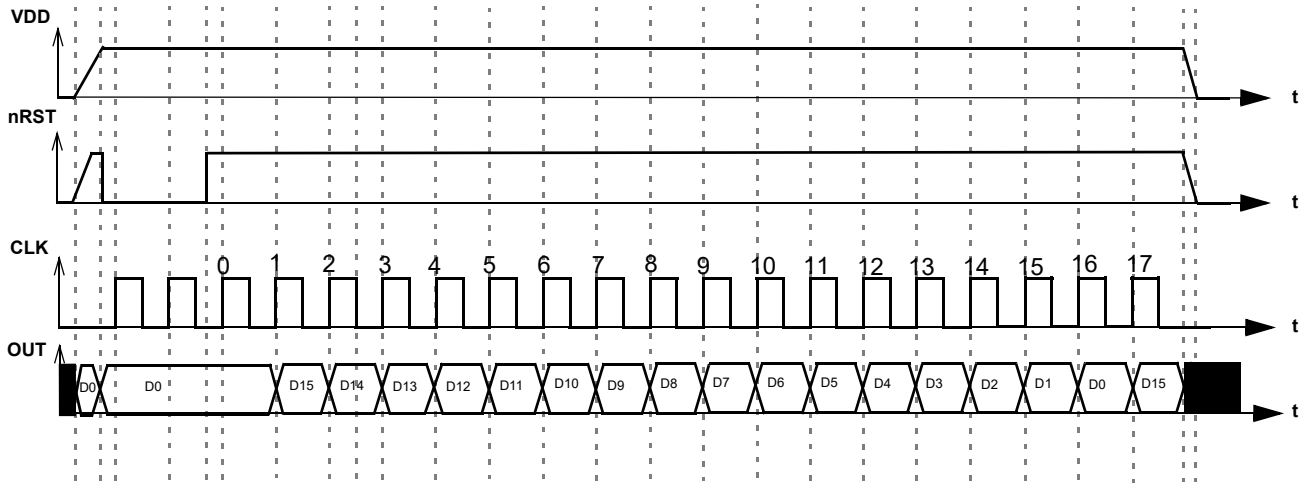

Figure 48. PGEN Timing Diagram

9.10 Wake and Sleep controller (WS)

The SLG46534 has a Wake and Sleep function for all ACMPs. The macrocell CNT/DLY0 can be reconfigured for this purpose reg<1319:1318>=11 and reg<1495>=1. The WS serves for power saving, it allows to switch on and off selected ACMPs on selected bit of 16-bit counter.

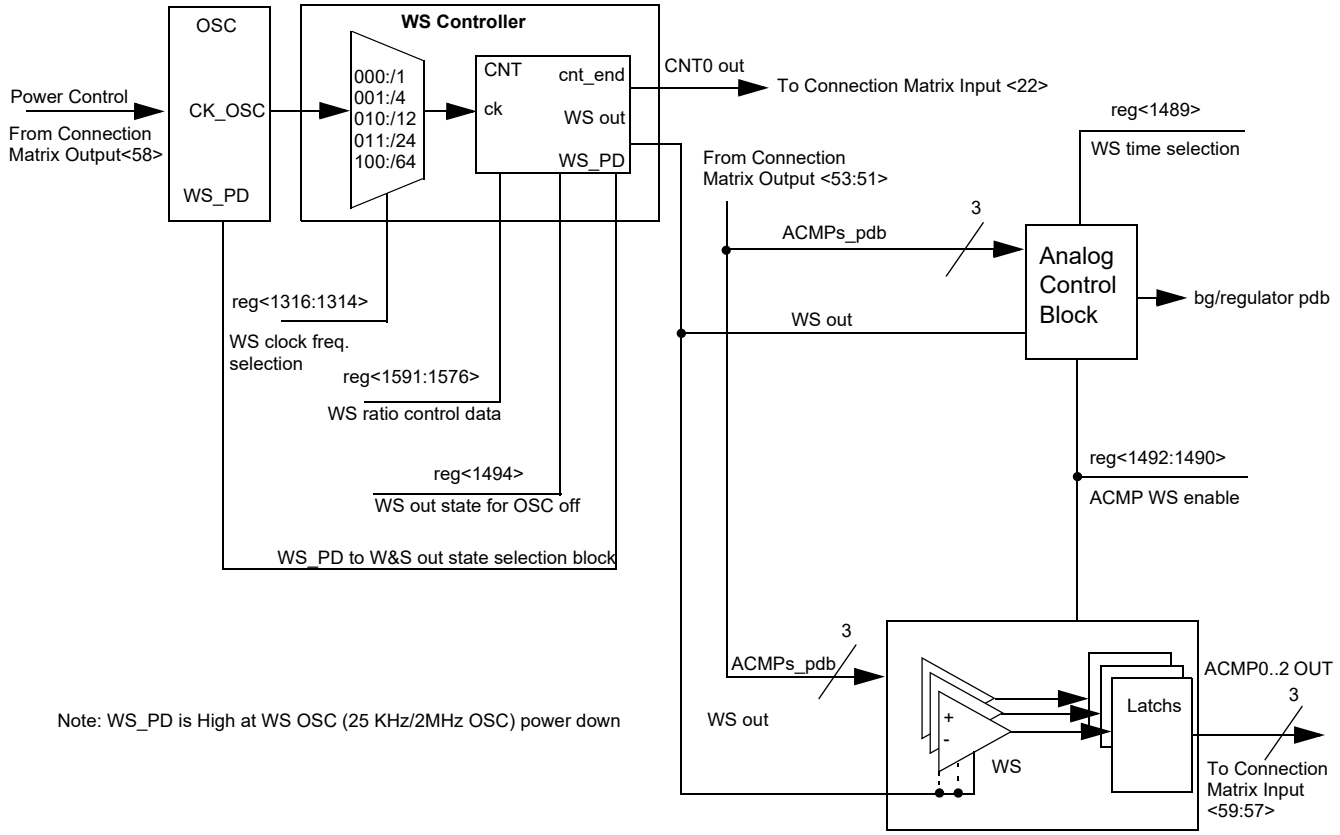

Figure 49. WS controller

To use any ACMP under WS controller the following settings must be done:

- ACMP Power Up Input from matrix = 1 (for each ACMP separately);
- CNT/DLY0 must be set to Wake and Sleep Controller function (for all ACMPs);
- Register WS => enable (for each ACMP separately);
- CNT/DLY0 set/reset input = 0 (for all ACMPs);
- In case of using OSC1 (25 MHz), OSC0 must be set to Force Power On.

As the OSC any oscillator with any pre divider can be used. The user can select a period of time while the ACMPs are sleeping in a range of 1 - 65535 clock cycles. Before they are sent to sleep their outputs are latched so the ACMPs remain their state (High or Low) while sleeping.

WS controller has the following settings:

- Wake and Sleep Output State (High/Low)
  If OSC is powered off (Power Down option is selected; power down input = 1) and Wake and Sleep Output State = High, the ACMP is continuously on.

If OSC is powered off (Power Down option is selected; power down input = 1) and Wake and Sleep Output State = Low, the ACMP is continuously off.
Both cases WS function is turned off.

- Counter Data (Range: 1 - 65535)
  User can select wake and sleep ratio of the ACMP; counter data = sleep time, one clock = wake time.

- Q mode - defines the state of WS counter data when Set/Reset signal appears
  Reset - when active signal appears, the WS counter will reset to zero and High level signal on its output will turn the ACMPs on. When Reset signal goes out, the WS counter will go Low and turn the ACMPs off until the counter counts up to the end
  Set - when active signal appears, the WS counter will stop and Low level signal on its output will turn the ACMPs off. When Set signal goes out, the WS counter will go on counting and High level signal will turn the ACMPs on while counter is counting up to the end.

- Edge Select defines the edge for Q mode
  High level Set/Reset - switches mode Set/Reset when level is High
  Note: Q mode operates only in case of "High Level Set/Reset".

- Wake time selection - time required for wake signal to turn the ACMPs on
  Normal Wake Time - when WS signal is High, it takes a BG time (100/550 µs) to turn the ACMPs on They will stay on until WS signal is Low again. Wake time is one clock period. It should be longer than BG turn on time and minimal required comparing time of the ACMP.
  Short Wake Time - when WS signal is High, it takes a BG time (100/550 µs) to turn the ACMPs on. They will stay on for 1 µs and turn off regardless of WS signal. The WS signal width does not matter.

- Keep - pauses counting while Keep = 1
- Up - reverses counting

  If Up = 1, CNT is counting up from user selected value to 65535.

  If Up = 0, CNT is counting down from user selected value to 0.

9.10.1 WS Register Settings

Table 72. WS Register Settings

Signal Function	Register Bit Address	Register Definition
Counter/delay0 Clock Source Select	reg<1316:1314>	000: Internal OSC clock 001: OSC/4 010: OSC/12 011: OSC/24 100: OSC/64 101: 25 MHz OSC clock 110: External Clock 111: Counter6 Overflow
WS time selection	reg<1489>	0: Short Wake Time 1: Normal Wake Time
ACMP0 Wake & Sleep function Enable	reg<1490>	0: Disable 1: Enable
ACMP1 Wake & Sleep function Enable	reg<1491>	0: Disable 1: Enable
ACMP2 Wake & Sleep function Enable	reg<1492>	0: Disable 1: Enable
Wake Sleep Output State When WS Oscillator is Power Down if DLY/CNT0 Mode Selection is "11"	reg<1494>	0: Low 1: High
Wake Sleep Ratio Control Mode Selection if DLY/CNT0 Mode Selection is "11"	reg<1495>	0: Default Mode 1: Wake Sleep Ratio Control Mode
DLY/CNT0 (16bits, <15:0> = <1591:1576>) Control Data	reg<1591:1576>	1 - 65535

10.0 Analog Comparators (ACMP)

There are three Analog Comparator (ACMP) macrocells in the SLG46534. In order for the ACMP cells to be used in a GreenPAK design, the power up signals (ACMPx_pdb) need to be active. By connecting to signals coming from the Connection Matrix, it is possible to have each ACMP be always on, always off, or power cycled based on a digital signal coming from the Connection Matrix. Also, all ACMPs have Wake and Sleep function (WS), see section *9.10 Wake and Sleep controller (WS)*. When ACMP is powered down, output is low.

PWR UP = 1 => ACMP is powered up.
PWR UP = 0 => ACMP is powered down.

During ACMP power up, its output will remain low, and then becomes valid 1.03 ms (max) after ACMP power up signal goes high, see *Figure 51*. If VDD is greater or equal to 2.7 V, it is possible to decrease turn-on time by setting the BG ok delay to 100 µs, see *Figure 52*. The ACMP cells have an input "Low bandwidth" signal selection, which can be used to save power and reduce noise impact when lower bandwidth signals are being compared. To ensure proper chip startup operation, it is recommended to enable the ACMPs with the POR signal, and not the VDD signal.

Note: Regulator and Charge Pump set to automatic ON/OFF.

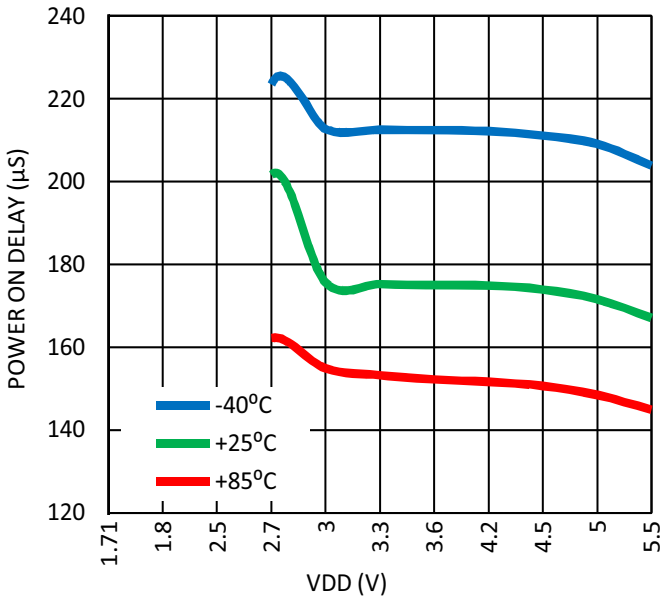

Figure 50. Maximum Power On Delay vs. VDD, BG = Auto-delay.

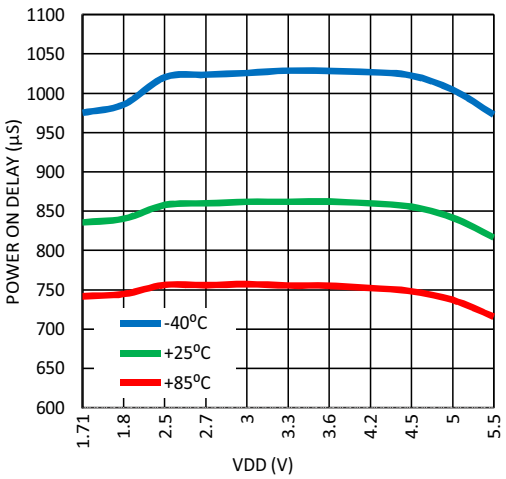

Figure 51. Maximum Power On Delay vs. VDD, BG = 550 µs.

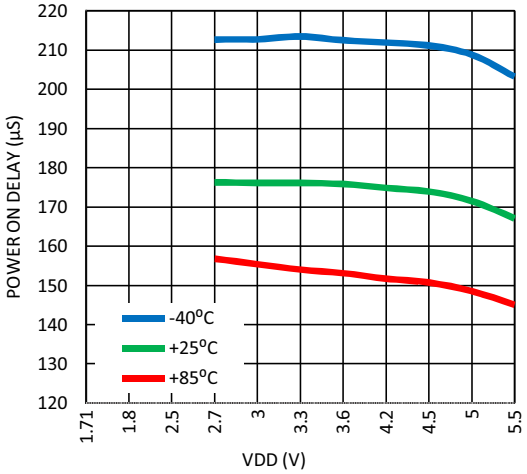

Figure 52. Maximum Power On Delay vs. VDD, BG = 100 µs.

Each of the ACMP cells has a positive input signal that can be provided by a variety of external sources. There is also a selectable gain stage (1X, 0.5X, 0.33X, 0.25X) before connection to the analog comparator. The Gain divider is unbuffered and consists of 250 KΩ (typ.) resistors, see *Table 73*. For gain divider accuracy refer to *Table 74*. IN- voltage range: 0 - 1.2 V. Can use Vref selection VDD/4 and VDD/3 to maintain this input range.

Input bias current < 1 nA (typ).

Table 73. Gain Divider Input Resistance

Gain	x1	x0.5	x0.33	x0.25
Input Resistance	100 MΩ	1 MΩ	0.75 MΩ	1 MΩ

Table 74. Gain Divider Accuracy

Gain	x0.5	x0.33	x0.25
Accuracy	±0.51%	±0.34%	±0.25%

Each cell also has a hysteresis selection, to offer hysteresis of 0 mV, 25 mV, 50 mV or 200 mV. The 50 mV and 200 mV hysteresis options can be used with internal voltage reference only, while 25 mV hysteresis option can be used with both internal and external voltage reference. The 50 mV and 200 mV hysteresis options are one way hysteresis. It means that the actual thresholds will be Vref (high threshold) and Vref - hysteresis (low threshold). The ACMP output will retain its previous value, if the input voltage is within threshold window (between Vref and Vref - hysteresis). Please note: for the 25 mV hysteresis option threshold levels will be Vref + hysteresis/2 (high threshold) and Vref – hysteresis/2 (low threshold).

Note: Any ACMP powered on enables the BandGap internal circuit as well. An analog voltage will appear on Vref even when the Force BandGap option is set as Disabled.

For high input impedance when using the gain divider (x0.25, x0.33, x0.5), it is possible to use the input buffer. However, this will add some offset, see *Figure 53.* It is not recommended to use ACMP buffer when VDD < 2.5 V.

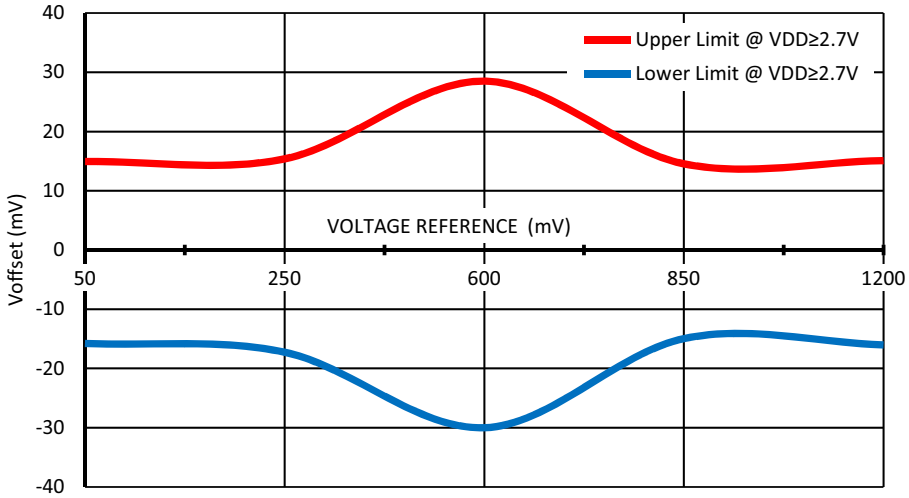

Figure 53. Typical Buffer Input Voltage Offset vs. Voltage Reference at T = (-40.... +85)°C, Buffer Bandwidth = 1 kHz, Vhys = 0 mV, Gain = 1.

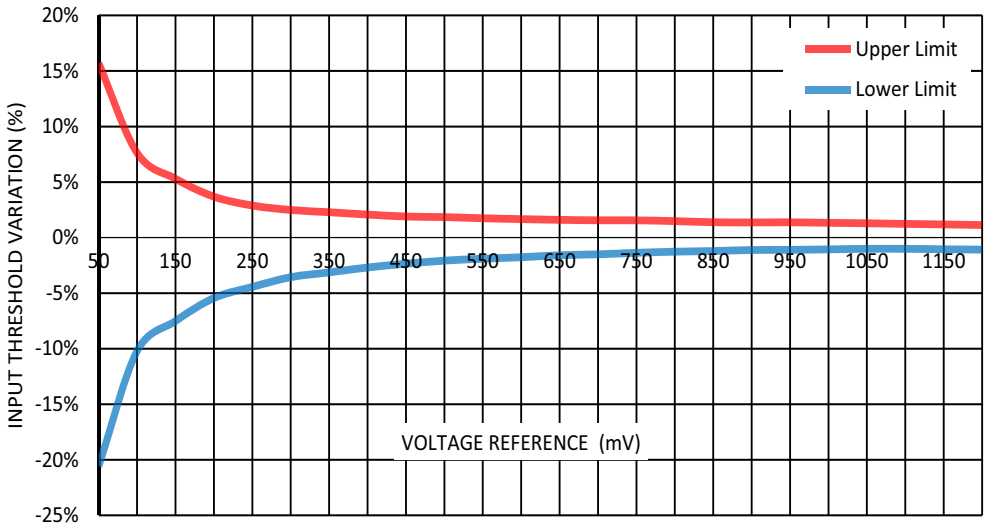

Figure 54. Typical Input Threshold Variation (including Vref variation, ACMP offset) vs. Voltage Reference at T = (-40.... +85)°C, LMB Mode - Disable, Vhys = 0 mV.

Note: when VDD < 1.8V voltage reference should not exceed 1100 mV.

Table 75. Built-in Hysteresis Tolerance at T = 25°C

Vhys (mV)	VDD=(1.7-1.8) V						VDD=(1.89-5.5) V					
	Vref = (50-500) mV		Vref = (550-1000) mV		Vref = (1050-1200) mV		Vref = (50-500) mV		Vref = (550-1000) mV		Vref = (1050-1200) mV	
	min	max	min	max	min	max	min	max	min	max	min	max
25	8.6	32.2	8.6	32.3	7.0	32.5	8.5	32.3	8.5	32.3	7.8	34.0
50	44.8	56.5	43.9	56.7	42.7	56.4	44.2	56.8	43.6	57.3	43.1	56.0
200	192.8	207.9	194.0	208.0	192.7	205.4	192.0	208.6	193.0	209.5	190.8	207.7

10.1 ACMP0 Block Diagram

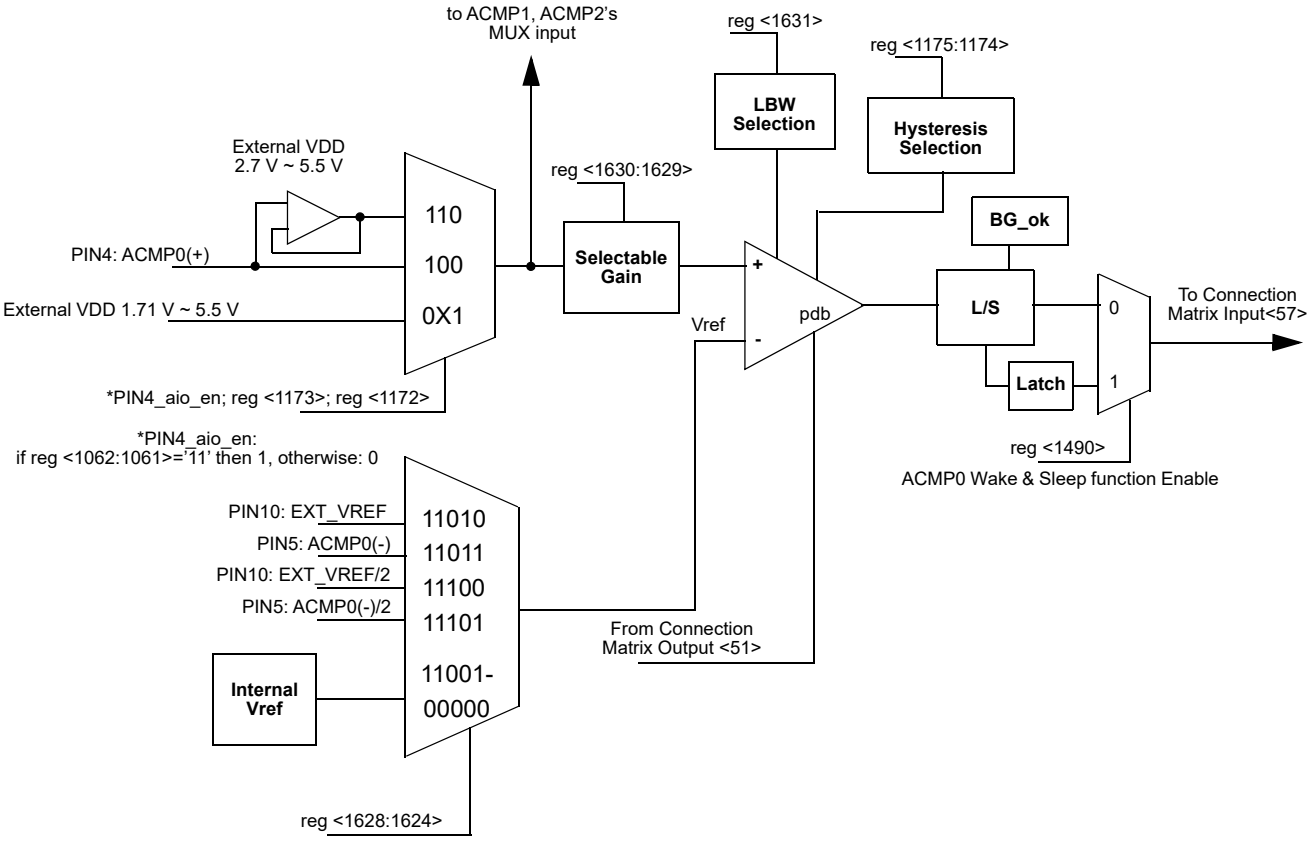

Figure 55. ACMP0 Block Diagram

10.2 ACMP0 Register Settings

Table 76. ACMP0 Register Settings

Signal Function	Register Bit Address	Register Definition
ACMP0 Positive Input Source Select	reg<1172>	0: IO4 1: VDD
ACMP0 Analog Buffer Enable	reg<1173>	0: Disable analog buffer 1: Enable analog buffer
ACMP0 Hysteresis Enable	reg<1175:1174>	00: Disabled (0 mV) 01: Enabled (25 mV) 10: Enabled (50 mV) 11: Enabled (200 mV) (01: for both external & internal VREF; 10 & 11: for only internal VREF; External VREF will not have 50 mV & 200 mV hysteresis.)
ACMP0 Wake & Sleep function Enable	reg<1490>	0: Disable 1: Enable
ACMP0 Negative Input Voltage Select	reg<1628:1624>	00000: 50 mV 00001: 100 mV 00010: 150 mV 00011: 200 mV 00100: 250 mV 00101: 300 mV 00110: 350 mV 00111: 400 mV 01000: 450 mV 01001: 500 mV 01010: 550 mV 01011: 600 mV 01100: 650 mV 01101: 700 mV 01110: 750 mV 01111: 800 mV 10000: 850 mV 10001: 900 mV 10010: 950 mV 10011: 1 V 10100: 1.05 V 10101: 1.1 V 10110: 1.15 V 10111: 1.2 V 11000: VDD/3 11001: VDD/4 11010: PIN10: EXT_VREF 11011: PIN5: ACMP0- 11100: PIN10: EXT_VREF/2 11101: PIN5: ACMP0-/2
ACMP0 Positive Input Divider	reg<1630:1629>	00: 1.00X 01: 0.50X 10: 0.33X 11: 0.25X
ACMP0 Low Bandwidth (Max: 1 MHz) Enable	reg<1631>	0: Off 1: On

10.3 ACMP1 Block Diagram

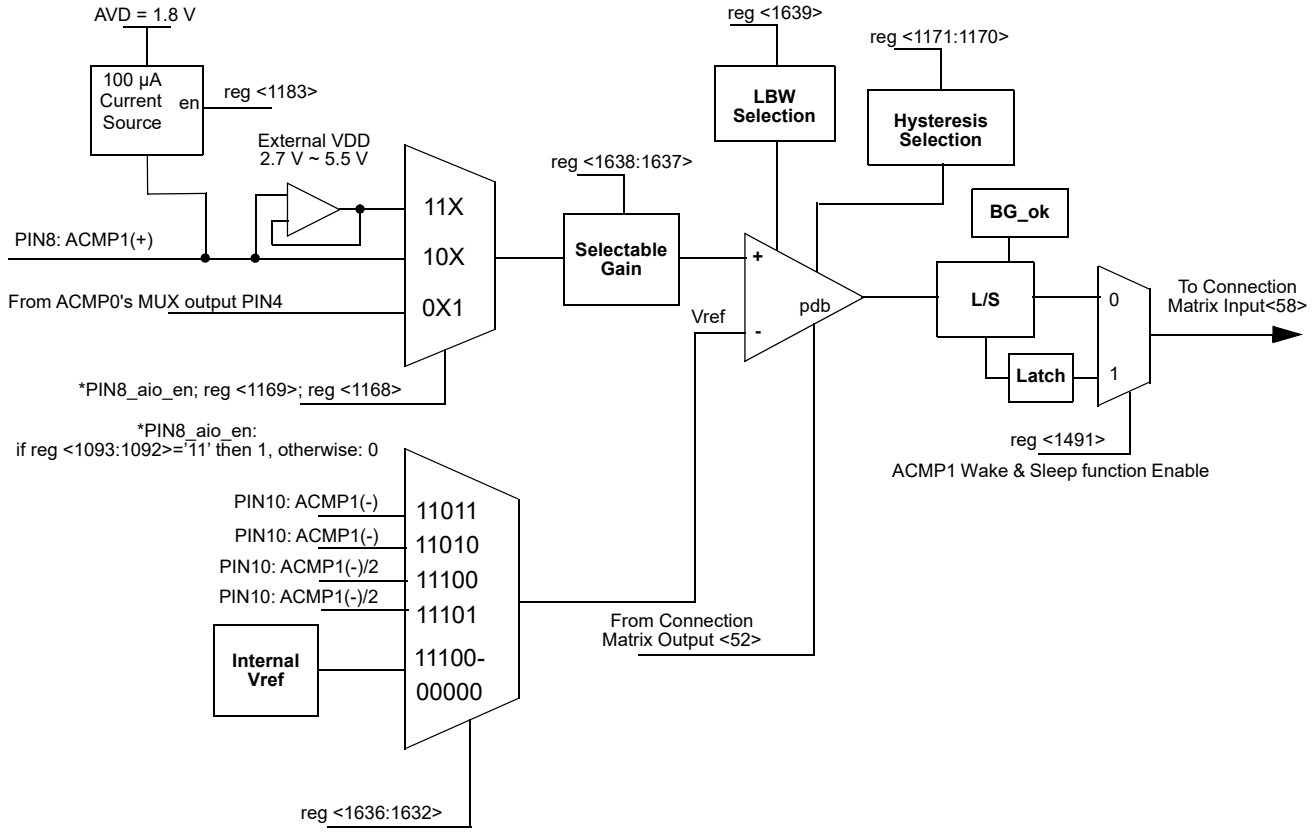

Note: when 100 µA Current Source is enabled input voltage on Pin 8 should not exceed 1.8 V

Figure 56. ACMP1 Block Diagram

10.4 ACMP1 Register Settings

Table 77. ACMP1 Register Settings

Signal Function	Register Bit Address	Register Definition
ACMP1 100 µA Current Source Enable	reg<1183>	0: Disable 1: Enable
ACMP1 Positive Input Source Select	reg<1168>	0: IO8 1: ACMP0 IN+ source
ACMP1 Analog Buffer Enable (max. band width 1 MHz)	reg<1169>	0: Disable analog buffer 1: Enable analog buffer
ACMP1 Hysteresis Enable	reg<1171:1170>	00: Disabled (0 mV) 01: Enabled (25 mV) 10: Enabled (50 mV) 11: Enabled (200 mV) (01: for both external & internal VREF; 10 & 11: for only internal VREF; External VREF will not have 50 mV & 200 mV hysteresis)
ACMP1 Wake & Sleep function Enable	reg<1491>	0: Disable 1: Enable
ACMP1 Negative Input Voltage Select	reg<1636:1632>	00000: 50 mV 00001: 100 mV 00010: 150 mV 00011: 200 mV 00100: 250 mV 00101: 300 mV 00110: 350 mV 00111: 400 mV 01000: 450 mV 01001: 500 mV 01010: 550 mV 01011: 600 mV 01100: 650 mV 01101: 700 mV 01110: 750 mV 01111: 800 mV 10000: 850 mV 10001: 900 mV 10010: 950 mV 10011: 1 V 10100: 1.05 V 10101: 1.1 V 10110: 1.15 V 10111: 1.2 V 11000: VDD/3 11001: VDD/4 11010: PIN10: EXT_VREF 11011: PIN10: EXT_VREF 11100: PIN10: EXT_VREF/2 11101: PIN10: EXT_VREF/2
ACMP1 Positive Input Divider	reg<1638:1637>	00: 1.00X 01: 0.50X 10: 0.33X 11: 0.25X
ACMP1 Low Bandwidth (Max: 1 MHz) Enable	reg<1639>	0: Off 1: On

10.5 ACMP2 Block Diagram

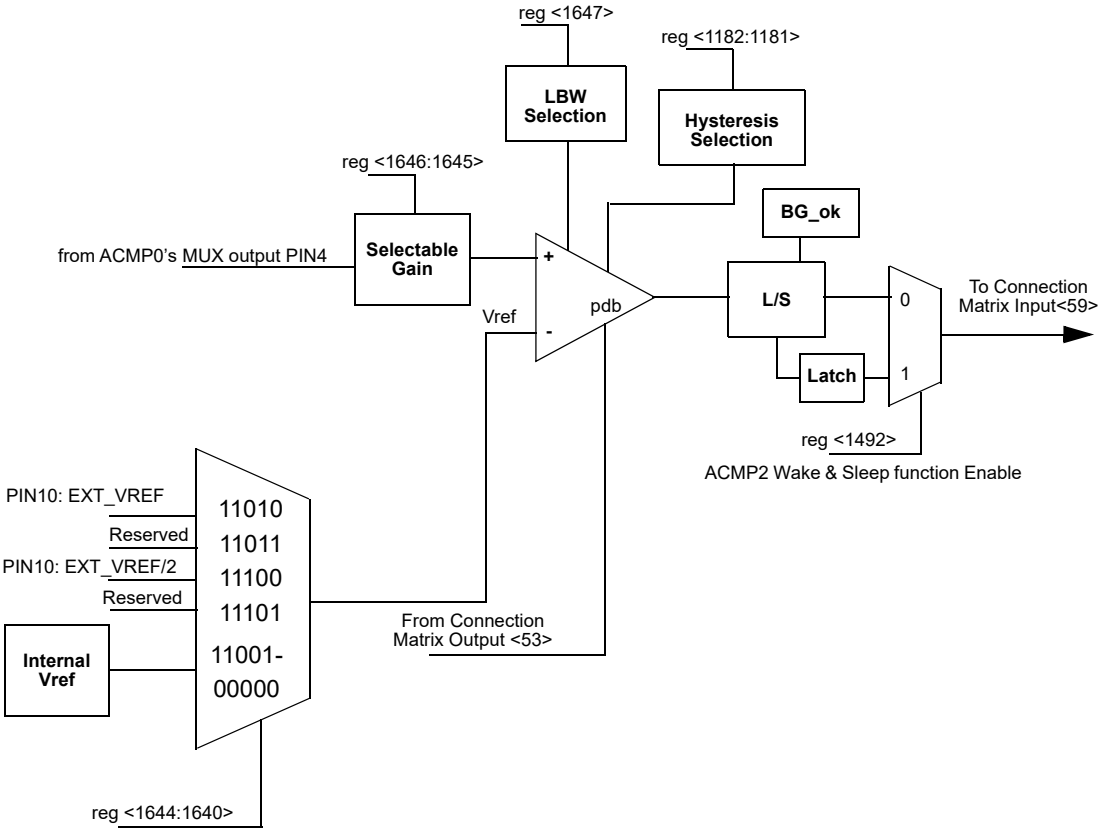

Figure 57. ACMP2 Block Diagram

10.6 ACMP2 Register Settings

Table 78. ACMP2 Register Settings

Signal Function	Register Bit Address	Register Definition
ACMP2 Hysteresis Enable	reg<1182:1181>	00: Disabled (0 mV) 01: Enabled (25 mV) 10: Enabled (50 mV) 11: Enabled (200 mV) (01: for both external & internal VREF; 10 & 11: for only internal VREF; External VREF will not have 50 mV & 200 mV hysteresis)
ACMP2 Wake & Sleep function Enable	reg<1492>	0: Disable 1: Enable
ACMP2 Negative Input Voltage Select	reg<1644:1640>	00000: 50 mV 00001: 100 mV 00010: 150 mV 00011: 200 mV 00100: 250 mV 00101: 300 mV 00110: 350 mV 00111: 400 mV 01000: 450 mV 01001: 500 mV 01010: 550 mV 01011: 600 mV 01100: 650 mV 01101: 700 mV 01110: 750 mV 01111: 800 mV 10000: 850 mV 10001: 900 mV 10010: 950 mV 10011: 1 V 10100: 1.05 V 10101: 1.1 V 10110: 1.15 V 10111: 1.2 V 11000: VDD/3 11001: VDD/4 11010: PIN10: EXT_VREF 11011: Reserved 11100: PIN10: EXT_VREF/2 11101: Reserved
ACMP2 Positive Input Divider	reg<1646:1645>	00: 1.00X 01: 0.50X 10: 0.33X 11: 0.25X
ACMP2 Low Bandwidth (Max: 1 MHz) Enable	reg<1647>	0: Off 1: On

11.0 Pipe Delay (PD)

The SLG46534 has a pipe delay logic cell that is shared with the 3-bit LUT10 in one of the Combination Function macrocells. The user can select one of these functions to use in a design, but not both. Please see Section *9.5 3-Bit LUT or Pipe Delay Macrocell* for the description of this Combination Function macrocell.

12.0 Programmable Delay / Edge Detector

The SLG46534 has a programmable time delay logic cell available that can generate a delay that is selectable from one of four timings configured in the GreenPAK Designer. The programmable time delay cell can generate one of four different delay patterns, rising edge detection, falling edge detection, both edge detection and both edge delay. See the timing diagrams below for further information.

Note: *The input signal must be longer than the delay, otherwise it will be filtered out.*

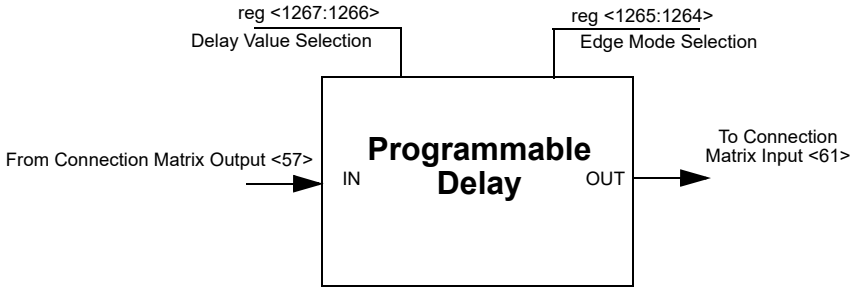

Figure 58. Programmable Delay

12.1 Programmable Delay Timing Diagram - Edge Detector Output

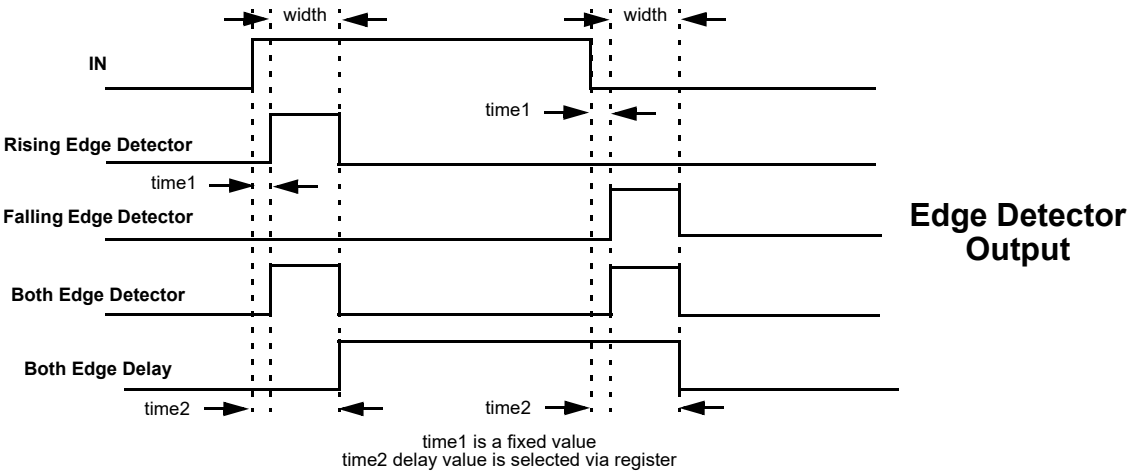

Figure 59. Edge Detector Output

Please refer to *Table 4. Expected Delays and Widths (typical)*

12.2 Programmable Delay Register Settings

Table 79. Programmable Delay Register Settings

Signal Function	Register Bit Address	Register Definition
Select the edge mode of programmable delay & edge detector	reg<1265:1264>	00: Rising Edge Detector 01: Falling Edge Detector 10: Both Edge Detector 11: Both Edge Delay
Delay value select for programmable delay & edge detector (VDD = 3.3V, typical condition)	reg<1267:1266>	00: 165 ns 01: 300 ns 10: 440 ns 11: 575 ns

13.0 Additional Logic Functions

The SLG46534 has two additional logic functions that are connected directly to the Connection Matrix inputs and outputs. There are two deglitch filters, each with edge detector functions. See section *5.11 Typical Pulse Width Performance*.

13.1 Deglitch Filter / Edge Detector

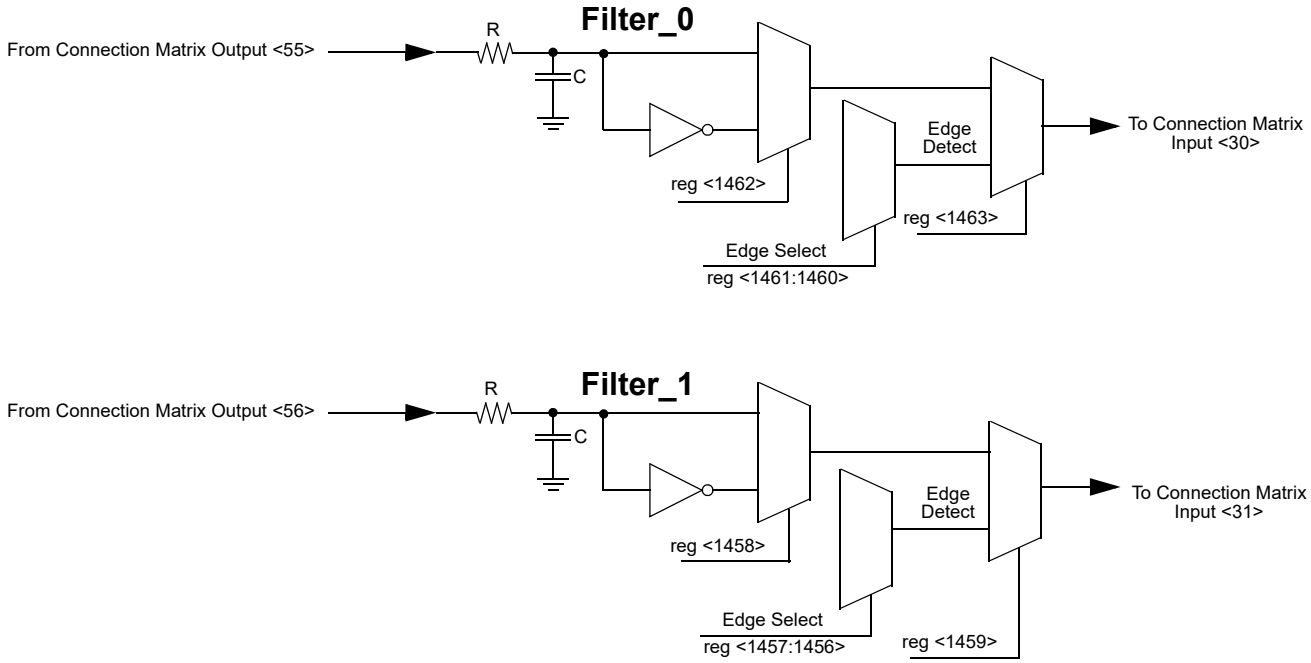

Figure 60. Deglitch Filter / Edge Detector

13.2 Deglitch Filter Register Settings

Table 80. Programmable Delay Register Settings

Signal Function	Register Bit Address	Register Definition
Filter_1/Edge Detector_1 Edge Select	reg<1457:1456>	00: Rising Edge Detector 01: Fall Edge Detector 10: Both Edge Detector 11: Both Edge Delay
Filter_1/Edge Detector_1 output Polarity Select	reg<1458>	0: Filter_1 output 1: Filter_1 output inverted
Filter_1 or Edge Detector_1 Select (Typ. 30 nS @VDD=3.3V)	reg<1459>	0: Filter_1 1: Edge Detector_1
Filter_0/Edge Detector_0 Edge Select	reg<1461:1460>	00: Rising Edge Detector 01: Fall Edge Detector 10: Both Edge Detector 11: Both Edge Delay

Table 80. Programmable Delay Register Settings

Signal Function	Register Bit Address	Register Definition
Filter_0/Edge Detector_0 output Polarity Select	reg<1462>	0: Filter_0 output 1: Filter_0 output inverted
Filter_0 or Edge Detector_0 Select (Typ. 47 nS @VDD=3.3V)	reg<1463>	0: Filter_0 1: Edge Detector_0

14.0 Voltage Reference (VREF)

14.1 Voltage Reference Overview

The SLG46534 has a Voltage Reference Macrocell to provide references to the four analog comparators. This macrocell can supply a user selection of fixed voltage references, /3 and /4 reference off of the V_{DD} power supply to the device, and externally supplied voltage references from PINs 5 and 11. See table below for the available selections for each analog comparator. Also see *Figure 61* below, which shows the reference output structure.

14.2 VREF Selection Table

Table 81. VREF Selection Table

SEL<4:0>	ACMP0_VREF	ACMP1_VREF	ACMP2_VREF
11101	PIN 5: ACMP0(-)/2	PIN 10: ACMP1(-)/2	PIN 11: ACMP2(-)/2
11100	PIN 10: ACMP0(-)/2	PIN 10: ACMP1(-)/2	PIN 10: ACMP2(-)/2
11011	PIN 5: ACMP0(-)	PIN 10: ACMP1(-)	PIN 11: ACMP2(-)
11010	PIN 10: ACMP0(-)	PIN 10: ACMP1(-)	PIN 10: ACMP2(-)
11001	VDD / 4	VDD / 4	VDD / 4
11000	VDD / 3	VDD / 3	VDD / 3
10111	1.20	1.20	1.20
10110	1.15	1.15	1.15
10101	1.10	1.10	1.10
10100	1.05	1.05	1.05
10011	1.00	1.00	1.00
10010	0.95	0.95	0.95
10001	0.90	0.90	0.90
10000	0.85	0.85	0.85
01111	0.80	0.80	0.80
01110	0.75	0.75	0.75
01101	0.70	0.70	0.70
01100	0.65	0.65	0.65
01011	0.60	0.60	0.60
01010	0.55	0.55	0.55
01001	0.50	0.50	0.50
01000	0.45	0.45	0.45
00111	0.40	0.40	0.40
00110	0.35	0.35	0.35
00101	0.30	0.30	0.30
00100	0.25	0.25	0.25
00011	0.20	0.20	0.20
00010	0.15	0.15	0.15
00001	0.10	0.10	0.10
00000	0.05	0.05	0.05

VDD	Practical VREF Range	Note
2.0 V - 5.5 V	50 mV ~ 1.2 V	
1.7 V - 2.0V	50 mV ~ 1.0 V	Do not operate above 1.0 V

14.3 VREF Block Diagram

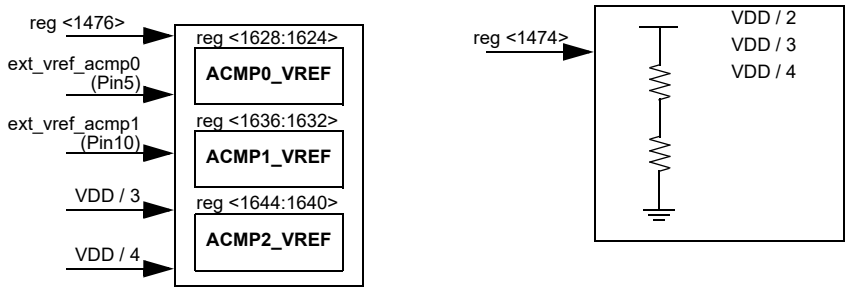

Figure 61. Voltage Reference Block Diagram

15.0 RC Oscillator (RC Osc)

The SLG46534 has three internal oscillators. RC Oscillator that runs at 25 kHz / 2 MHz (OSC0), Oscillator that runs at 25 MHz (OSC1) and Crystal Oscillator. It is possible to use all three oscillators simultaneously. The fundamental frequency can also come from clock input (Pin 14 for 25 kHz / 2 MHz and Pin 13 for 25 MHz or Crystal OSC), see section 20.0 External Clocking.

15.1 25 kHz/2 MHz and 25 MHz RC Oscillators

There are two divider stages that allow the user flexibility for introducing clock signals on various Connection Matrix Input lines. The predivider allows the selection of /1, /2, /4 or /8 divide down frequency from the fundamental. The second stage divider (only for 25 kHz / 2 MHz Oscillator) has an input of frequency from the predivider, and outputs one of seven different frequencies on Connection Matrix Input lines <27> (OUT0) and <28> (OUT1). See *Figure 62* and *Figure 63* below for details.

There are two modes of the POWER CONTROL pin, (reg<1658> for 25 kHz / 2 MHz OSC and reg<1657> for 25 MHz OSC):

- **POWER DOWN <0>**. If PWR CONTROL input of oscillator is LOW, the oscillator will be turned on. If PWR CONTROL input of oscillator is HIGH the oscillator will be turned off and OSC divider will reset.
- **FORCE ON <1>**. If PWR CONTROL input of oscillator is HIGH, the oscillator will be turned on. If PWR CONTROL input of oscillator is LOW the oscillator will be turned off.

The PWR CONTROL signal has the highest priority.

The SLG46534 has a 25 kHz / 2 MHz OSC FAST START-UP function reg<1338> (1 – on, 0 – off). It allows the OSC to run immediately after power-up. Start-up time is less than one cycle. Note that when OSC FAST START-UP is on, the current consumption will rise.

The user can select two OSC POWER MODEs (reg<1343 for 25 kHz / 2 MHz OSC and reg<1341> for 25 MHz OSC):

- If **AUTO POWER ON <0>** is selected, the OSC will run only when any macrocell that uses OSC is powered on.
- If **FORCE POWER ON <1>** is selected, the OSC will run when the SLG46534 is powered on.

OSC can be turned on by:

- Register control (force power on)
- Delay mode, when delay requires OSC
- CNT/FSM

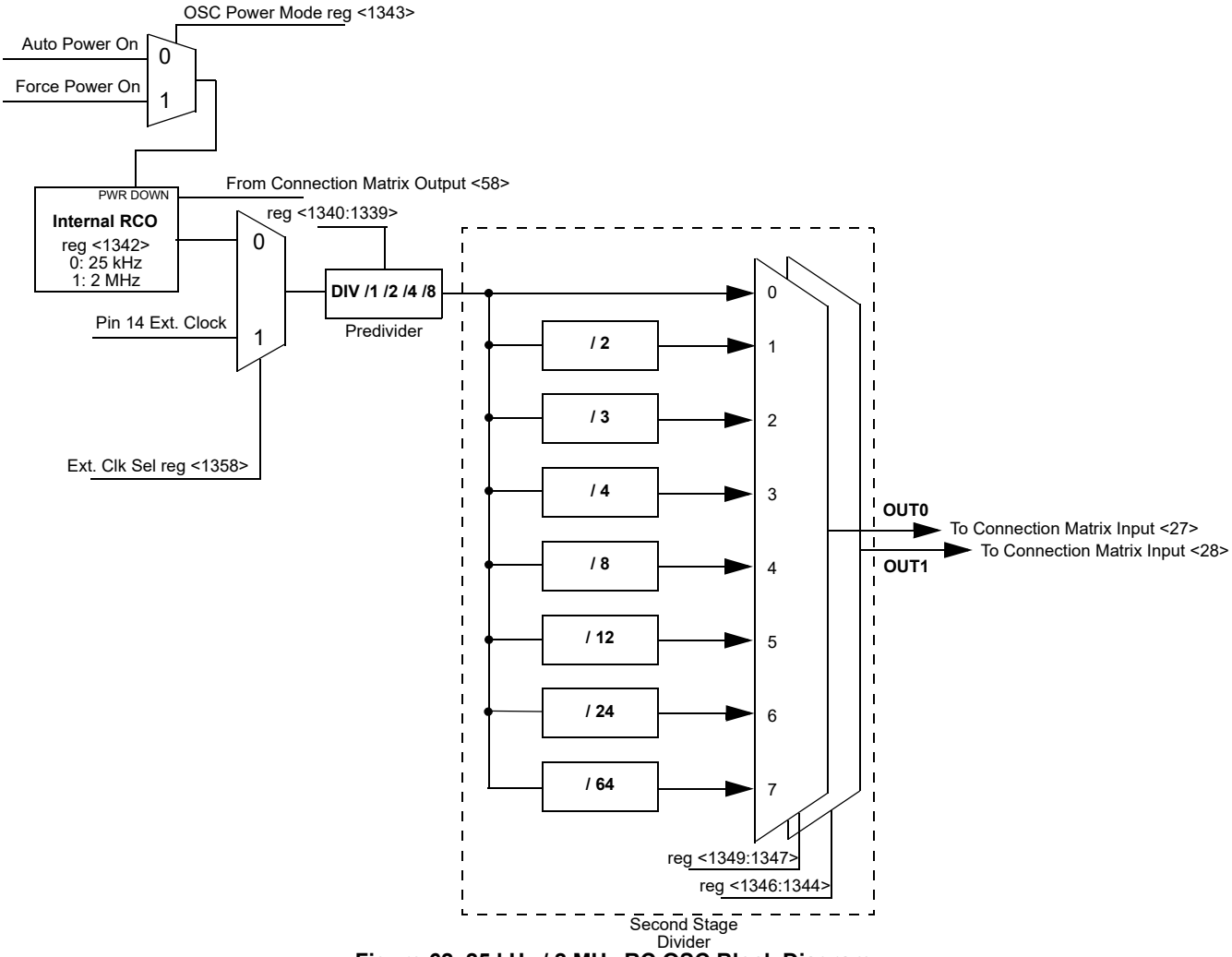

Figure 62. 25 kHz / 2 MHz RC OSC Block Diagram

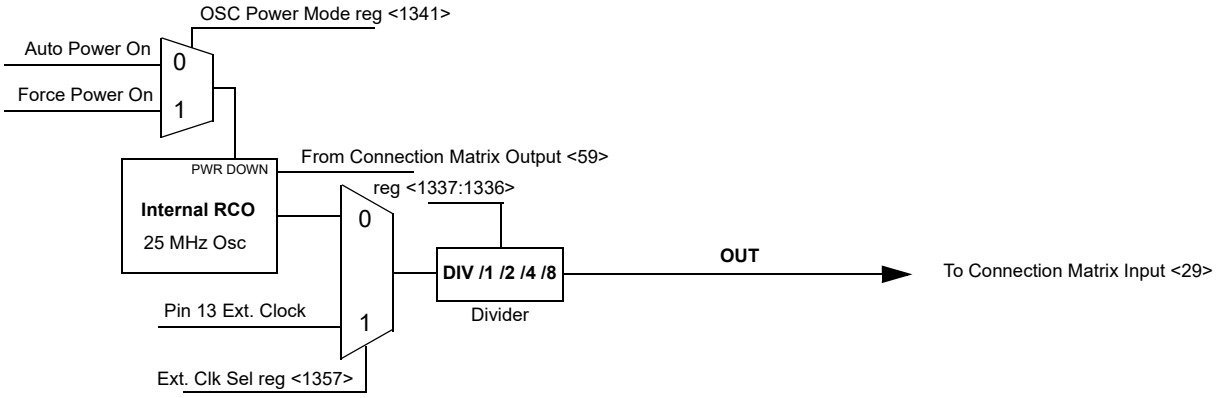

Figure 63. 25 MHz RC OSC Block Diagram

15.2 Oscillator Power On delay

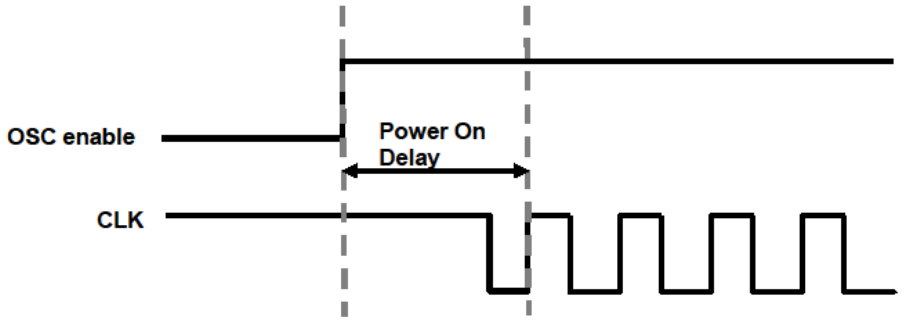

Figure 64. Oscillator Startup Diagram

Note 1: OSC power mode: "Auto Power On".

Note 2: 'OSC enable' signal appears when any macrocell that uses OSC is powered on.

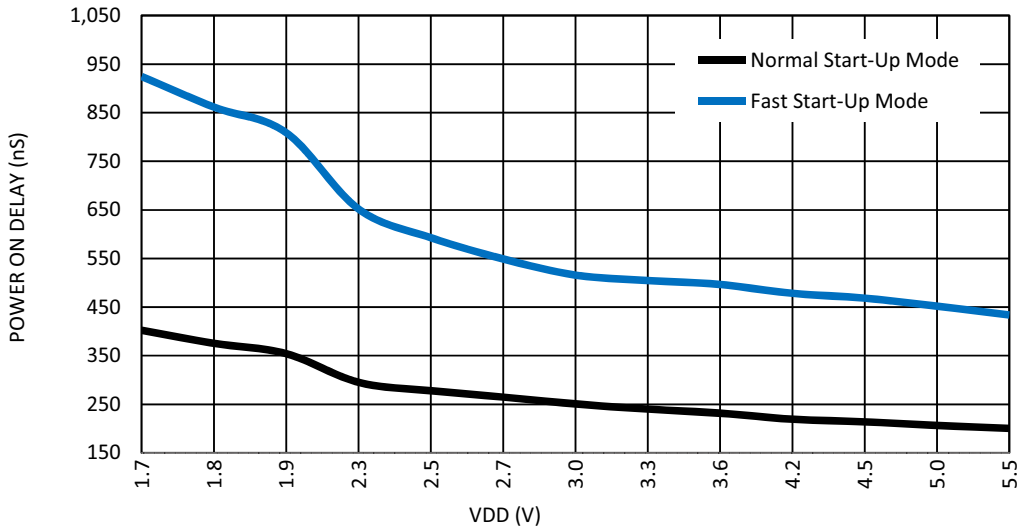

Figure 65. RC Oscillator Maximum Power On Delay vs. VDD at room temperature, OSC0 = 2 MHz

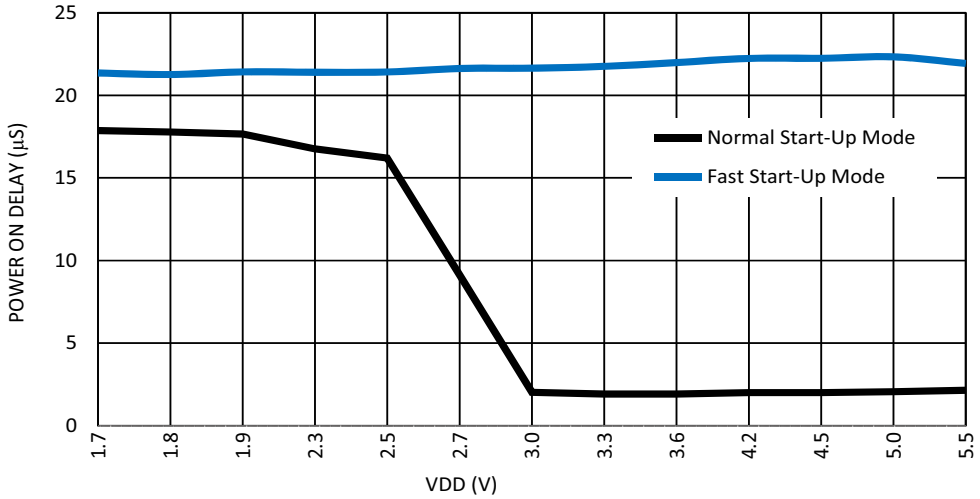

Figure 66. RC Oscillator Maximum Power On Delay vs. VDD at room temperature, OSC0 = 25 kHz

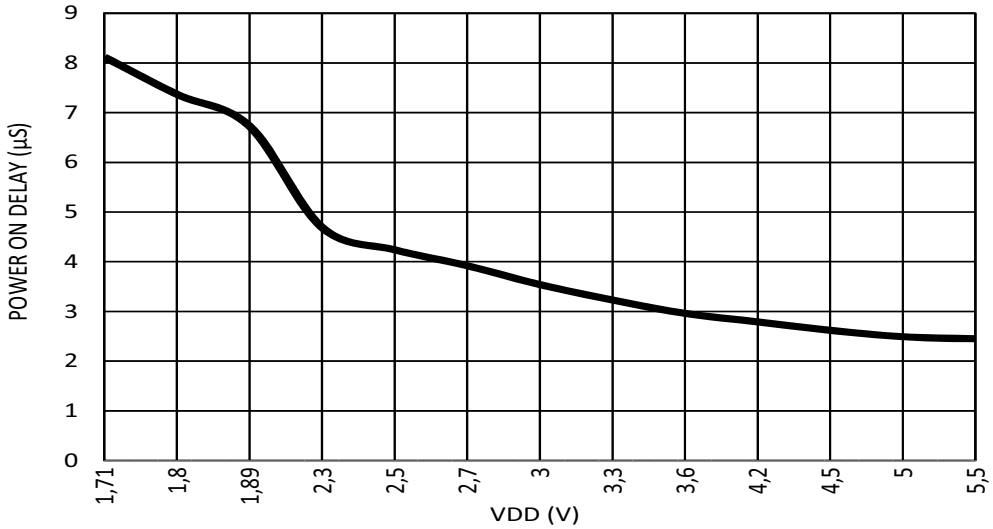

Figure 67. OSC1 (25 MHz) Maximum Power On Delay vs. VDD at room temperature

15.3 Oscillator Accuracy

Note: OSC power setting: Force Power On; Clock to matrix input - enable; Bandgap: turn on by register - enable.

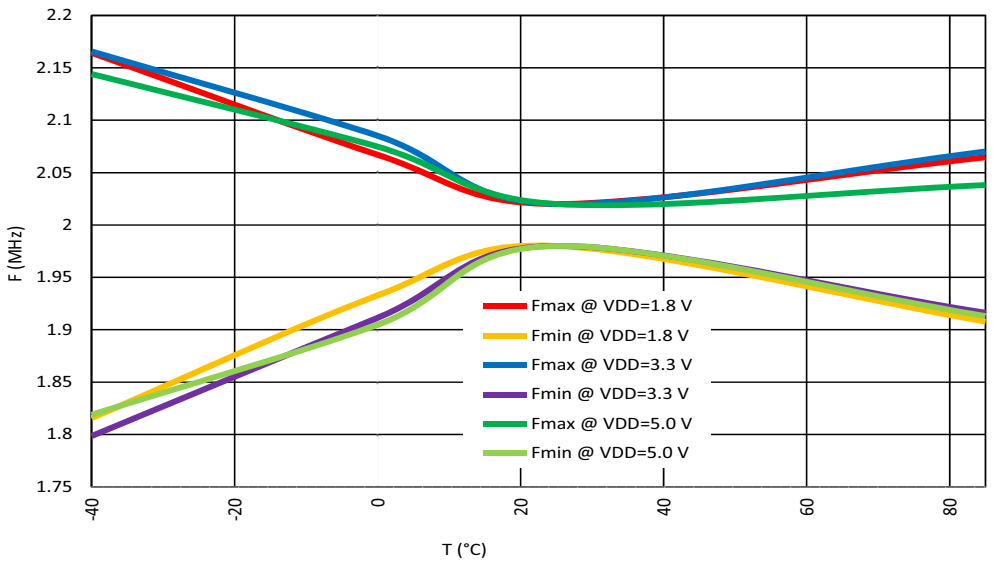

Figure 68. RC Oscillator Frequency vs. Temperature, RC OSC0=2 MHz

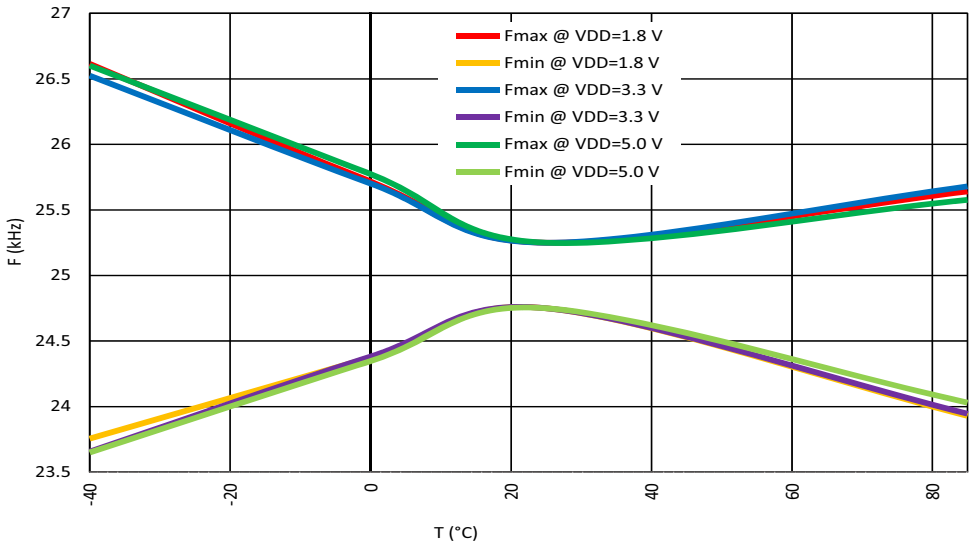

Figure 69. RC Oscillator Frequency vs. Temperature, RC OSC0=25 kHz

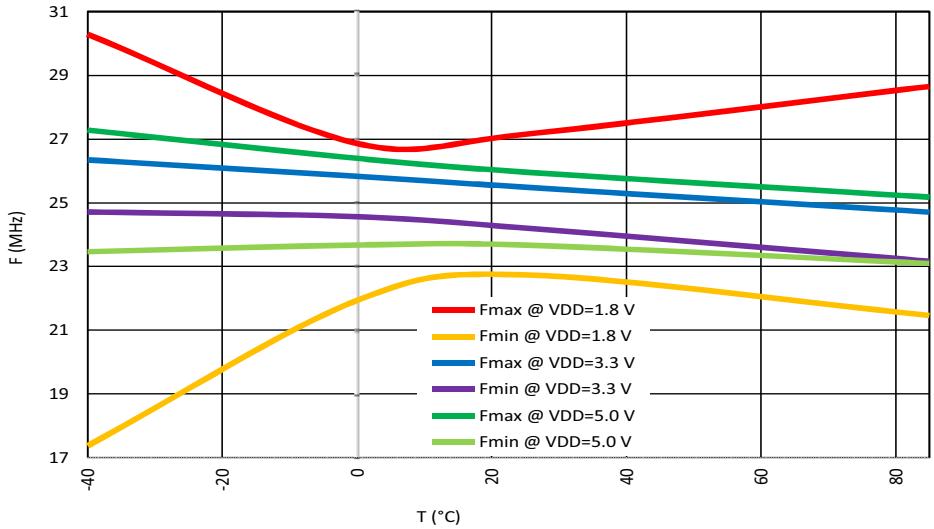

Figure 70. OSC1 (25 MHz) Frequency vs. Temperature

Note 1: For more information see section 5.12 OSC Specifications.

Note 2: 25 MHz RC OSC1 performance is not guaranteed at VDD < 2.5 V.

16.0 Crystal Oscillator

The Crystal OSC provides high precision and stability of the output frequency. Pin 13 and Pin 12 are input and output, respectively, of an inverting amplifier which is configured for use as an On-chip Oscillator, as shown in *Figure 72*. Either a quartz crystal or a ceramic resonator may be used. The optimal value of the capacitors depends on the crystal or resonator in use, the amount of stray capacitance, and the electromagnetic noise of the environment. Refer to *Table 82*. For the ceramic resonators, the capacitor values given by the manufacturer should be used. It is possible to use an external clock source, it must be connected to Pin 13. In this case no external components are required.

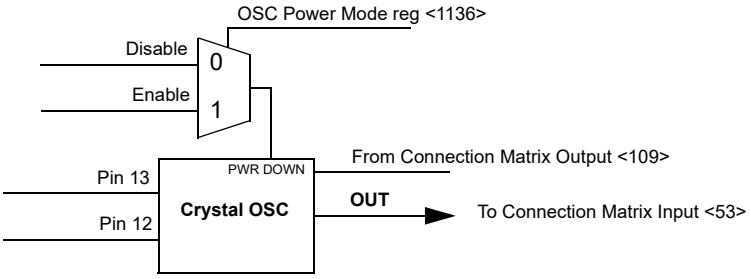

Figure 71. Crystal OSC Block Diagram

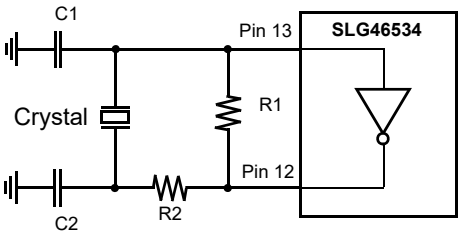

Figure 72. External Crystal Connection

Table 82. External Components Selection Table

f	C1	C2	R1	R2
32.768 kHz	10 pF	330 pF	20 MΩ	20 kΩ
4 - 40 MHz	12 pF	12 pF	1 MΩ	0 Ω

17.0 Power On Reset (POR)

The SLG46534 has a power-on reset (POR) macrocell to ensure correct device initialization and operation of all macrocells in the device. The purpose of the POR circuit is to have consistent behavior and predictable results when the VDD power is first ramping to the device, and also while the VDD is falling during power-down. To accomplish this goal, the POR drives a defined sequence of internal events that trigger changes to the states of different macrocells inside the device, and finally to the state of the I/O pins.

17.1 General Operation

The SLG46534 is guaranteed to be powered down and nonoperational when the VDD voltage (voltage on PIN1) is less than Power Off Threshold (see in Electrical Characteristics table), but not less than -0.6 V. Another essential condition for the chip to be powered down is that no voltage higher (see Note 1) than the VDD voltage is applied to any other PIN. For example, if VDD voltage is 0.3 V, applying a voltage higher than 0.3 V to any other PIN is incorrect, and can lead to incorrect or unexpected device behavior.

Note 1. There is a 0.6 V margin due to forward drop voltage of the ESD protection diodes.

To start the POR sequence in the SLG46534, the voltage applied on the VDD should be higher than the Power_ON threshold (see Note 2). The full operational VDD range for the SLG46534 is 1.71 V – 5.5 V (1.8 V ±5% - 5 V±10%). This means that the VDD voltage must ramp up to the operational voltage value, but the POR sequence will start earlier, as soon as the VDD voltage rises to the Power_ON threshold. After the POR sequence has started, the SLG46534 will have a typical period of time to go through all the steps in the sequence (noted in the datasheet for that device), and will be ready and completely operational after the POR sequence is complete.

Note 2. The Power_ON threshold is defined in Electrical Characteristics table.

To power down the chip the VDD voltage should be lower than the operational and to guarantee that chip is powered down it should be less than Power Off Threshold.

All PINs are in high impedance state when the chip is powered down and while the POR sequence is taking place. The last step in the POR sequence releases the I/O structures from the high impedance state, at which time the device is operational. The pin configuration at this point in time is defined by the design programmed into the chip. Also as it was mentioned before the voltage on PINs can’t be bigger than the VDD, this rule also applies to the case when the chip is powered on.

17.2 POR Sequence

The POR system generates a sequence of signals that enable certain macrocells. The sequence is shown in *Figure 73*.

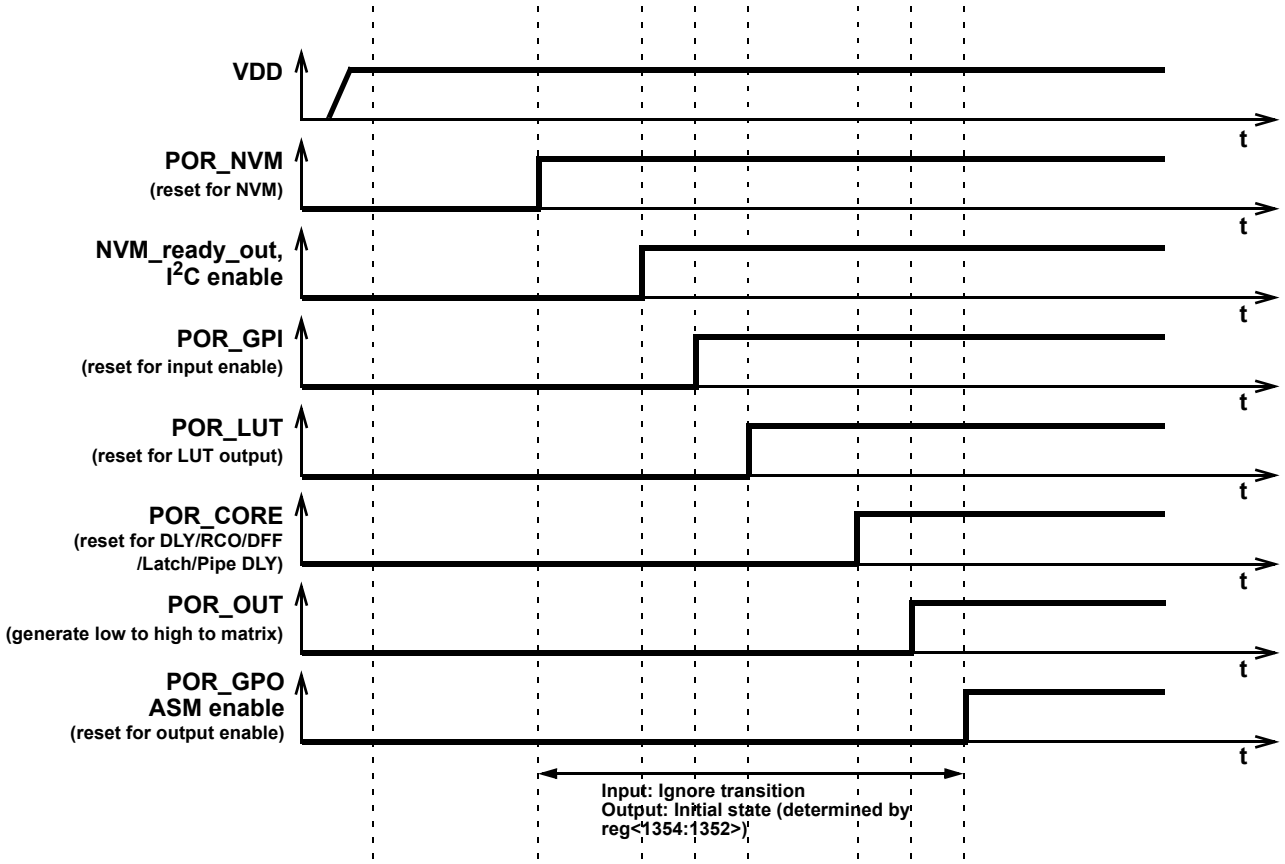

Figure 73. POR sequence

As can be seen from *Figure 73* after the VDD has start ramping up and crosses the Power_ON threshold, first, the on-chip NVM memory is reset. Next the chip reads the data from NVM, and transfers this information to SRAM registers that serve to configure each macrocell, and the Connection Matrix which routes signals between macrocells. The third stage causes the reset of the input pins, and then to enable them. After that, the LUTs are reset and become active. After LUTs the Delay cells, RC OSC, DFFs, Latches and Pipe Delay are initialized. Only after all macrocells are initialized internal POR signal (POR macrocell output) goes from LOW to HIGH. The last portion of the device to be initialized are the output PINs, which transition from high impedance to active at this point.

The typical time that takes to complete the POR sequence varies by device type in the GreenPAK family. It also depends on many environmental factors, such as: slew rate, VDD value, temperature and even will vary from chip to chip (process influence).

17.3 Macrocells Output States During POR Sequence

To have a full picture of SLG46534 operation during powering and POR sequence, review the overview the macrocell output states during the POR sequence (*Figure 74* describes the output signals states).

First, before the NVM has been reset, all macrocells have their output set to logic LOW (except the output PINs which are in high impedance state). Before the NVM is ready, all macrocell outputs are unpredictable (except the output PINs). On the next step, some of the macrocells start initialization: input pins output state becomes LOW; LUTs also output LOW. Only P DLY macrocell configured as edge detector becomes active at this time. After that input PINs are enabled. Next, only LUTs are configured. Next, all other macrocells are initialized. After macrocells are initialized, internal POR matrix signal switches from LOW to HIGH. The last are output PINs that become active and determined by the input signals.

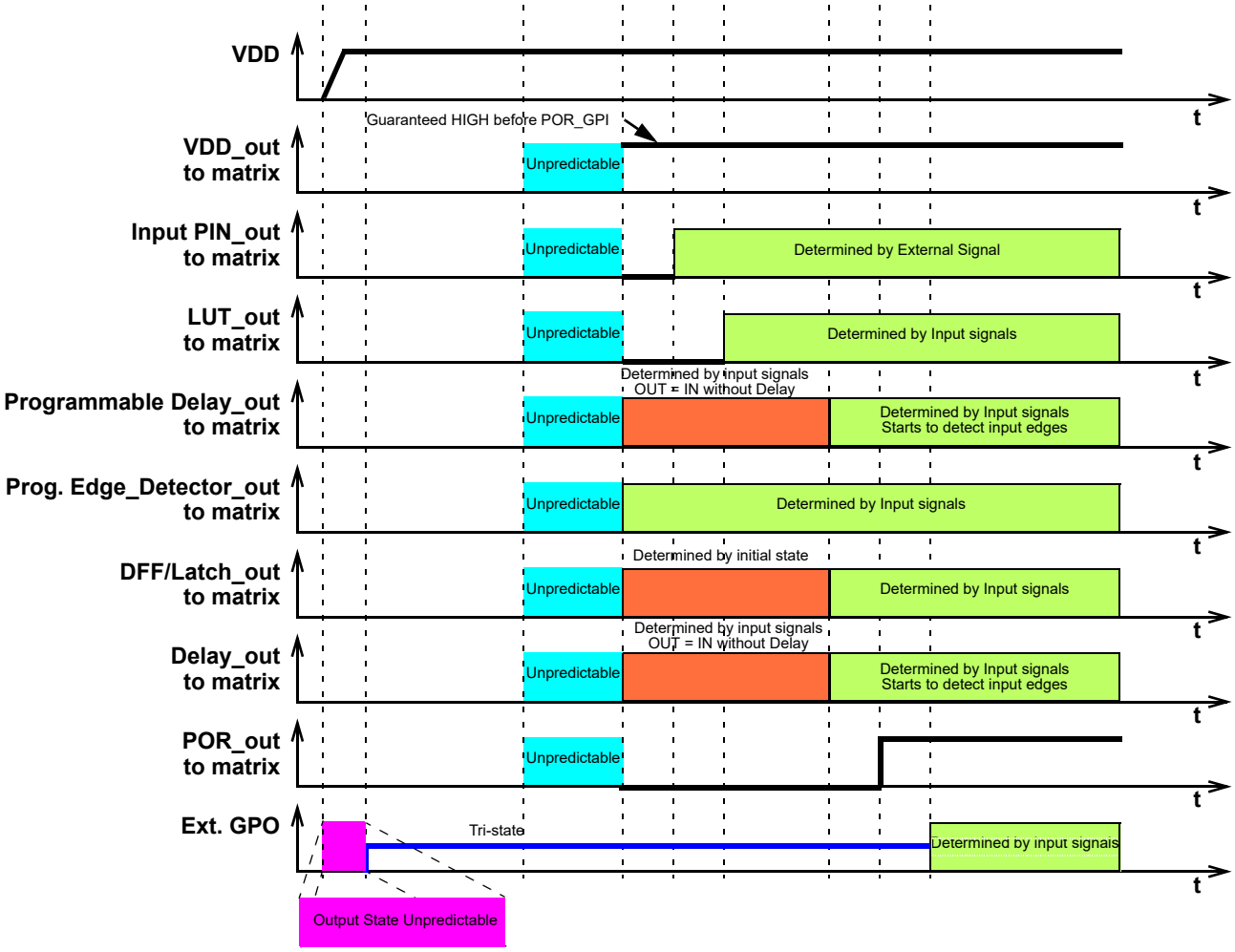

Figure 74. Internal Macrocell States during POR sequence

17.3.1 Initialization

All internal macrocells by default have initial low level. Starting from indicated power-up time of 1.15 V - 1.6 V, macrocells in GPAK are powered on while forced to the reset state, All outputs are in Hi-Z and chip starts loading data from NVM. Then the reset signal is released for internal macrocells and they start to initialize according to the following sequence:

1. I^2C;
2. Input PINs, ACMP, pull up/down;
3. LUTs;
4. DFFs, Delays/Counters, Pipe Delay;
5. POR output to matrix;
6. Output PIN corresponds to the internal logic.

The POR signal going high indicates the mentioned power-up sequence is complete.

Note: The maximum voltage applied to any PIN should not be higher than the VDD level. There are ESD Diodes between PIN –> VDD and PIN –> GND on each PIN. So if the input signal applied to PIN is higher than VDD, then current will sink through the diode to VDD. Exceeding VDD results in leakage current on the input PIN, and VDD will be pulled up, following the voltage on the input PIN.There is no effect from input pin when input voltage is applied at the same time as VDD.

17.3.2 Power Down

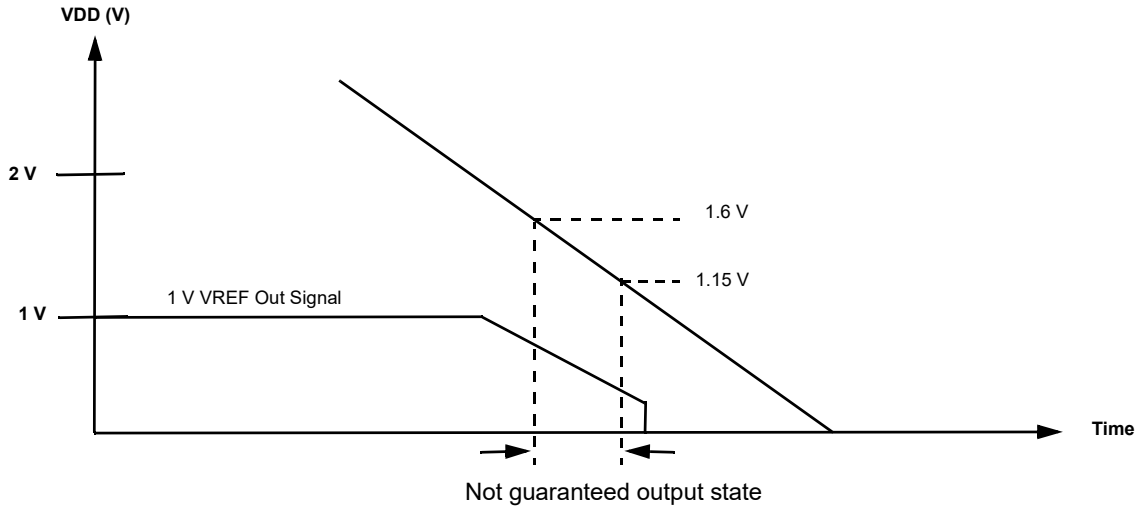

Figure 75. Power Down

During powerdown, macrocells in SLG46534 are powered off after VDD falling down below Power Off Threshold. Please note that during a slow rampdown, outputs can possibly switch state during this time.

18.0 Asynchronous State Machine (ASM) Macrocell

18.1 ASM Macrocell Overview

The Asynchronous State Machine (ASM) macrocell is designed to allow the user to create state machines with between 2 to 8 states. The user has flexibility to define the available states, the available state transitions, and the input signals (a, b, c …) that will cause transitions from one state to another state, as shown in *Figure 76*.

This macrocell has a total of 25 inputs, as shown in *Figure 77*, which come from the Connection Matrix outputs. Of these 25 inputs, 24 are user selectable for driving general state transitions, and 1 is for driving a state transition to an Initial / Reset state. Each of the 24 inputs is level sensitive and active high, meaning that a high level input will drive the user selected transition from one state to another. The fact that there are 24 inputs puts the upper bound of 24 possible state transitions total in the user defined state machine design. There is on nReset input which will drive an immediate state transition to the user-defined Initial / Reset state when active, shown in red, in the *Figure 76*. For more details refer to section *18.2 ASM Inputs*.

There are a total of 8 outputs, which go to the Connections Matrix inputs, and from there can be routed to other internal macrocells or pins. The 8 outputs are user defined for each of the possible 8 states. This information is held in the Connection Matrix Output RAM. For more details refer to section *18.3 ASM Outputs*.

In using this macrocell, the user must take into consideration the critical timing required on all input and output signals. The timing waveforms and timing specifications for this macrocell are all measured relative to the input signals (which come into the macrocell on the Connection Matrix outputs) and on the outputs from the macrocell (which are direct connections to Connection Matrix inputs). The user must consider any delays from other logic and internal chip connections, including I/O delays, to insure that signals are properly processed, and state transitions are deterministic.

The GPAK Designer development tools support user designs for the ASM macrocell at both the physical level and logic level. *Figure 76* is a representation of the user design at the logical level, and *Figure 77* shows the physical resources inside the macrocell. To best utilize this macrocell, the user must develop a logical representation of their desired state machine, as well as a physical mapping of the input and outputs required for the desired functionality.

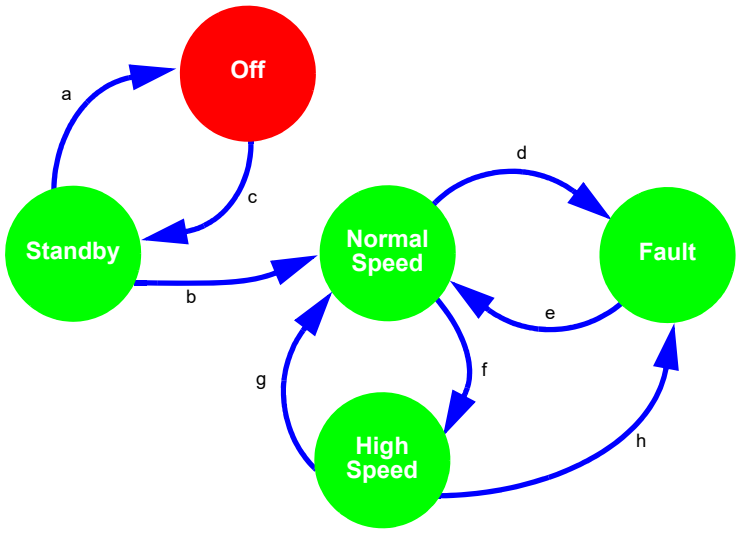

Figure 76. Asynchronous State Machine State Transitions

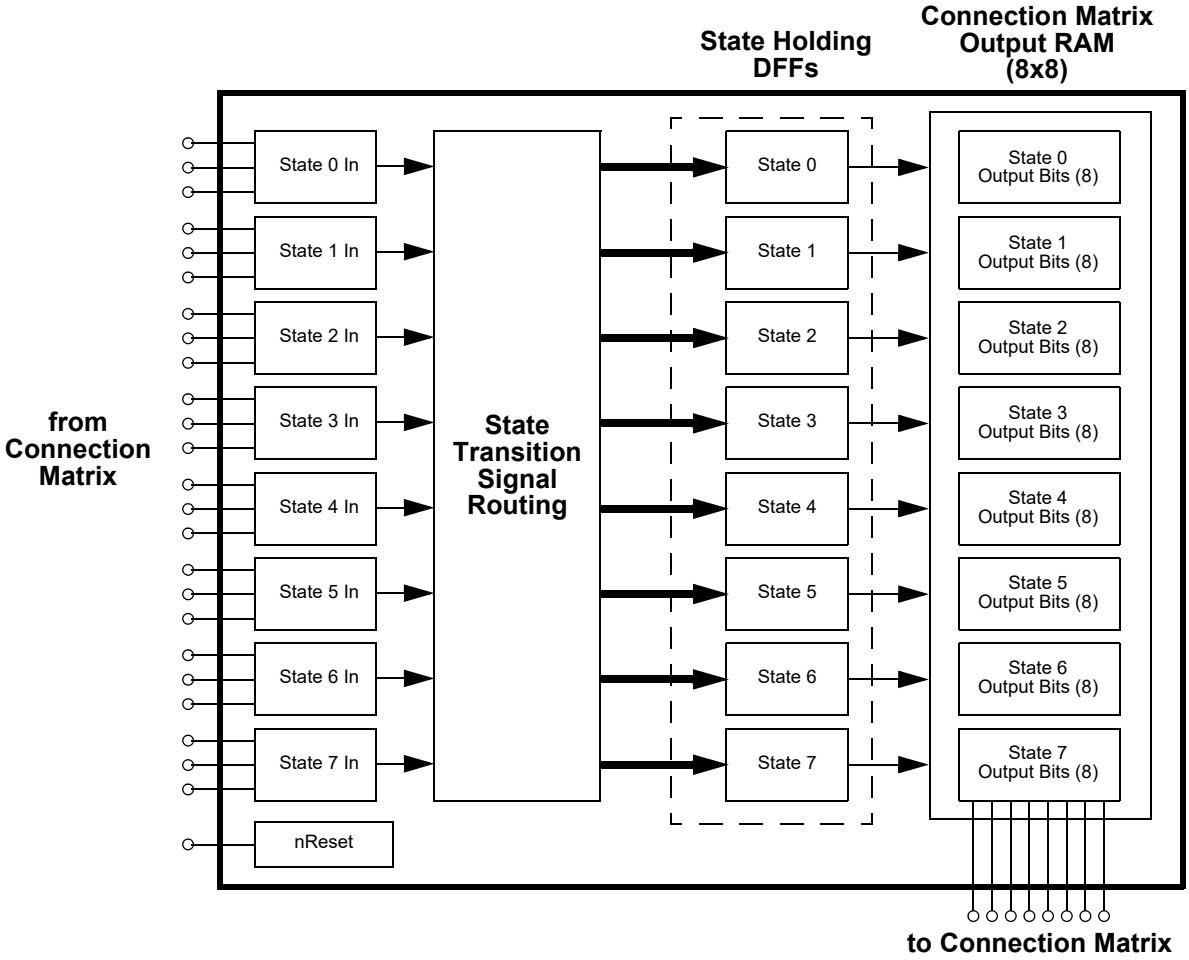

Figure 77. Asynchronous State Machine

18.2 ASM Inputs

The ASM macrocell has a total of 25 inputs which come from the Connection Matrix outputs. Of these 25 inputs, 24 are user selectable for driving general state transitions, and 1 is for driving a state transition to an Initial / Reset state.

There are a total of 24 inputs to the ASM macrocell for general state transitions, highlighted in red in *Figure 78*. Each of these inputs is level sensitive, and active high. A high level input will trigger a state transition.

These inputs are grouped so that each set of 3 inputs can drive a state transition **going into** a particular state. As an example, there are three inputs that can drive a state transition to State 1. This sets an upper bound on the number of transitions that the user can select going into a particular state to be 3, shown in *Figure 79*.

There is no limitation on the number of transitions that can be supported coming out of a particular state, the user can select to have transitions going from a state to all other states, shown in *Figure 80*.

The ASM macrocell also has a nReset input highlighted in blue in *Figure 78*. This input is level sensitive and active low. An active signal on this input will drive an immediate state transition to the user-defined Initial / Reset state. The user can choose which state within the ASM Editor inside GPAK Designer is the initial state.

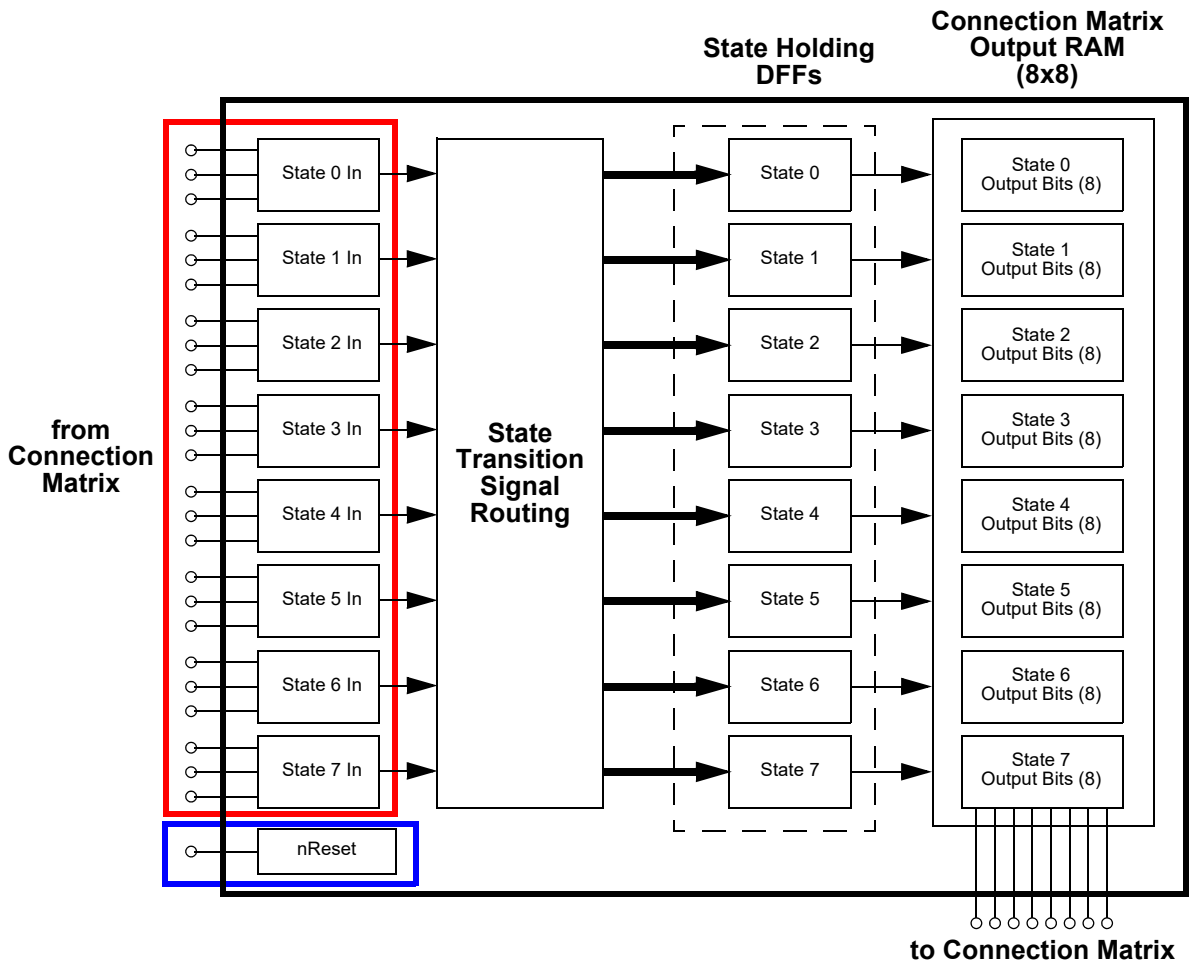

Figure 78. Asynchronous State Machine Inputs

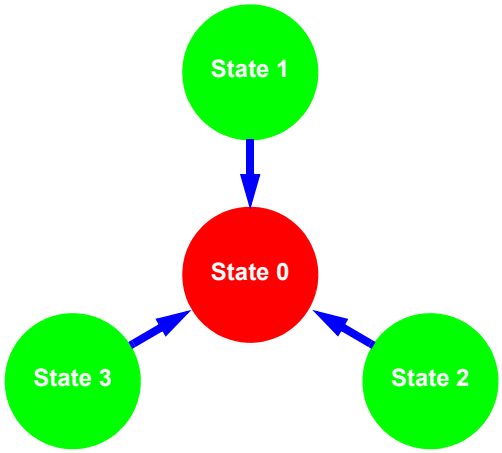

Figure 79. Maximum 3 State Transitions into Given State

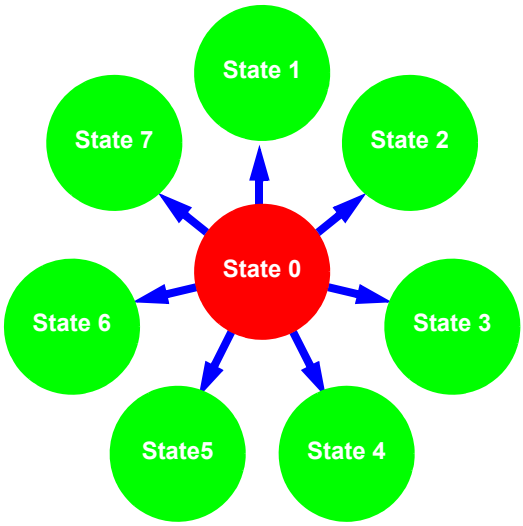

Figure 80. Maximum 7 State Transitions out of a Given State

18.3 ASM Outputs

There are a total of 8 outputs from the ASM macrocell, which go to the Connections Matrix inputs, and from there can be routed to other internal macrocells or pins. The 8 outputs are user defined for each of the possible 8 states, this information is held in the Connection Matrix Output RAM, shown in *Figure 81*. The Connection Matrix Output RAM has a total of 64 bits, arranged as 8 bits per state. The values loaded in each of the 8 bits define the signal level on each of the 8 ASM macrocell outputs.

The ASM Editor inside the GPAK Designer software allows the user to make their selections for the value of each bit in the Connection Matrix Output RAM, which selects the level of the macrocell outputs based on the current state of the ASM macrocell, as shown in *Figure 81*.

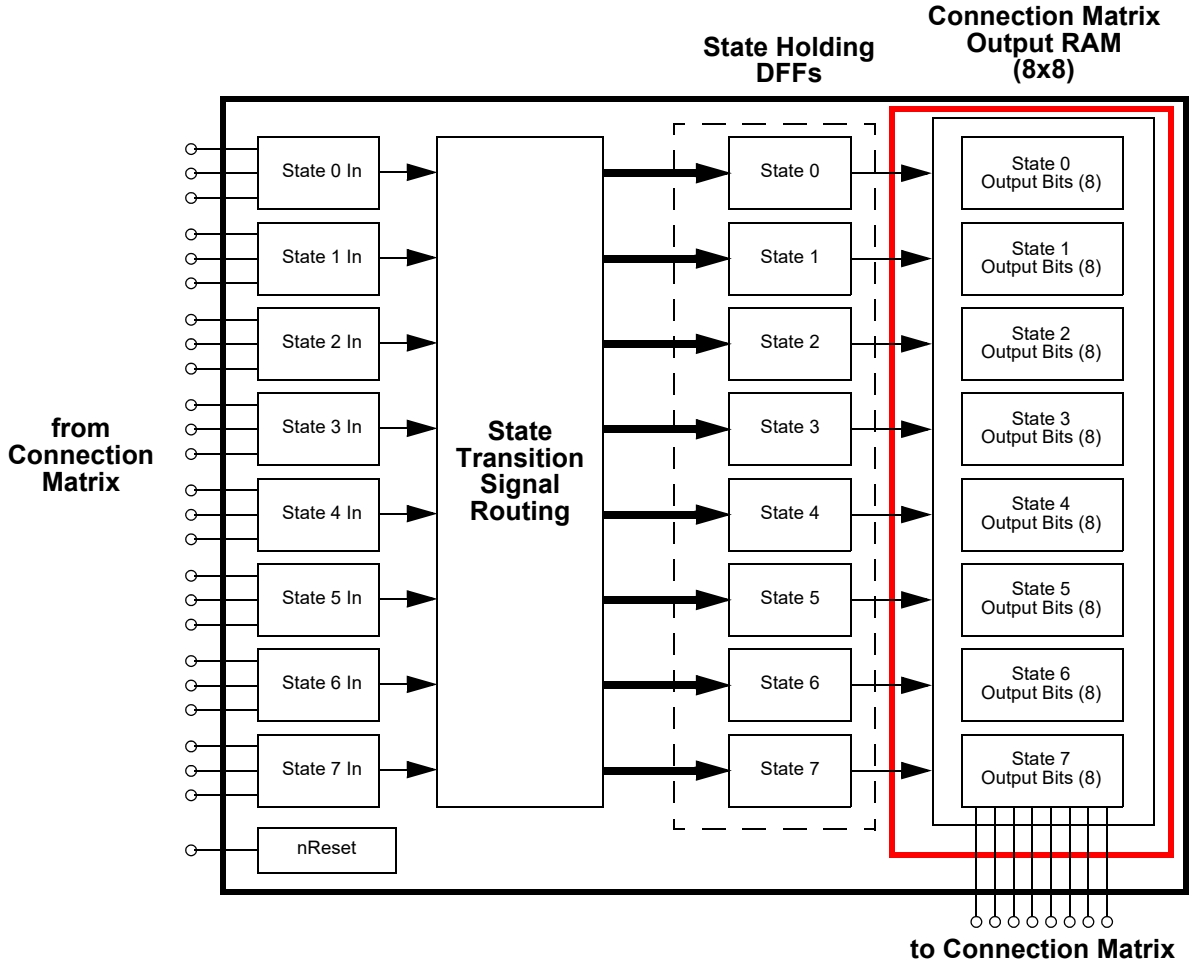

Figure 81. Connection Matrix Output RAM

Table 83. ASM Editor - Connection Matrix Output RAM

RAM								
State name	**Connection Matrix Output RAM**							
	OUT7	**OUT6**	**OUT5**	**OUT4**	**OUT3**	**OUT2**	**OUT1**	**OUT0**
State 0	0	0	0	0	0	0	0	1
State 1	0	0	0	0	0	0	1	0
State 2	0	0	0	0	0	1	0	0
State 3	0	0	0	0	1	0	0	0
State 4	0	0	0	1	0	0	0	0
State 5	0	0	1	0	0	0	0	0
State 6	0	1	0	0	0	0	0	0
State 7	1	0	0	0	0	0	0	0

There is a possibility to configure ASM (it's settings and transitions) via I2C. Registers (reg<197:0>) correspond for ASM inputs, registers (reg<1727:1664>) correspond for ASM outputs configuration. Using I2C commands (see section *19.4 I2C Serial Communications Commands*) it is possible to read ASM settings and connections, as well as change them. Additionally, user can change Connection Matrix Output RAM bit configuration (bytes 0xD0…0xD7)

Note: After Connection Matrix Output RAM was updated via I2C, ASM outputs to Connection Matrix can be changed only after ASM changes its state or after reset event. To change ASM outputs to Connection Matrix instantly after I2C write command, ASM must be in reset all the time.

18.4 Basic ASM Timing

The basic state transition timing from input on Matrix Connection output to output on Matrix Connection input is shown in *Figure 82* and *Figure 83*. The time from a valid input signal to the time that there is a valid change of state and valid signals being available on the state outputs is State Machine Output Delay Time (Tst_out_delay). The minimum and maximum values of Tst_out_delay define the differential timing between the shortest state transition (input on matrix output and output on matrix input) and the longest state transition (input on matrix output and output on matrix input).

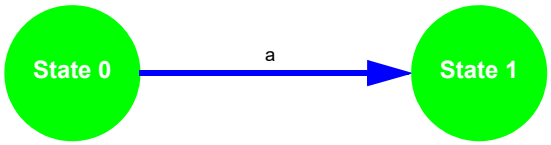

Figure 82. State Transition

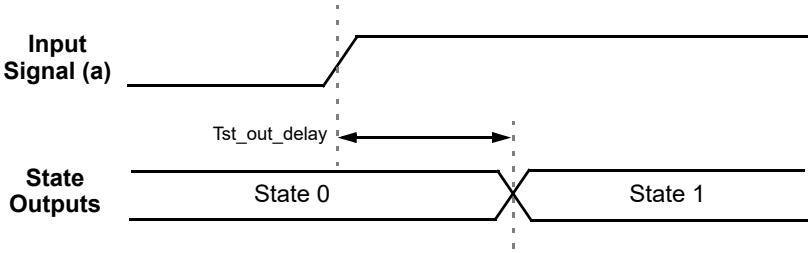

Figure 83. State Transition Timing

18.5 Asynchronous State Machines vs. Synchronous State Machines

It is important to note that this macrocell is designed for asynchronous operation, which means the following:

1. No clock source is needed, it reacts only to input signals
2. The input signals do not have to be synchronized to each other, the macrocell will react to the earliest valid signal for state transition.
3. This macrocell does not have traditional set-up and hold time specifications which are related to incoming clock, as this macrocell has no clock source.
4. The macrocell only consumes power while in state transition.

18.6 ASM Power Considerations

A benefit of the asynchronous nature of this macrocell is that it will consume power only during state transitions. Shown in *Figure 82* and *Figure 84* below, the current consumption of the macrocell will be a fraction of a µA between state transitions, and will rise only during state transitions. See Section 5.7 IDD Estimator to find average current during state transitions.

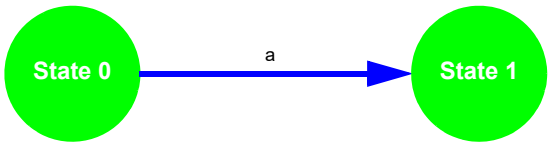

Figure 84. State Transition

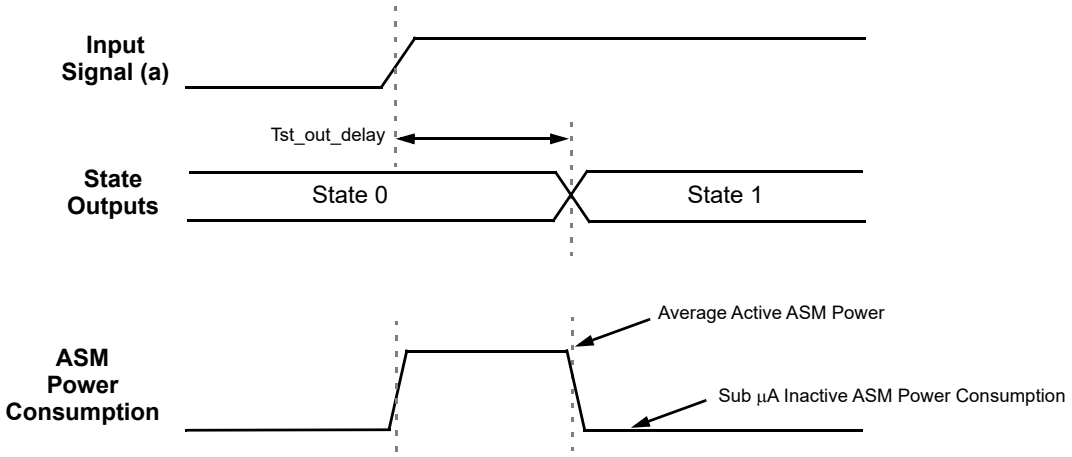

Figure 85. State Transition Timing and Power Consumption

18.7 ASM Logical vs. Physical Design

A successful design with the ASM macrocell must include both the logic level design as well as the physical level design. The GPAK Designer development software support user designs for the ASM macrocell at both the logic level and physical level. The logic level design of the user defined state machine takes place inside the ASM Editor. In the ASM Editor, the user can select and name states, define and name allowed state transitions, define the Initial / Reset state and define the output values for the 8 outputs in the Output RAM Matrix. The physical level design takes place in the general GPAK Designer window, and here the user makes connections for the sources for ASM input signals, as well as making connections for destinations for ASM output signals.

18.8 ASM Special Case Timing Considerations

18.8.1 State Transition Pulse Input Timing

All inputs to the ASM macrocell are level sensitive. If the input to the state machine macrocell for a state transition is a pulse, there is a minimum pulse width on the input to the state machine macrocell (as measured at the matrix input to the macrocell) which is guaranteed to result in a state transition shown in *Figure 86* and *Figure 87*. This pulse width is defined by the State Machine Input Pulse Acceptance Time (Tst_pulse). If a pulse width that is shorter than Tst_pulse is input to the state machine macrocell, it is indeterminate whether the state transition will happen or not. If a pulse that is rejected (invalid due to the pulse width being narrower than the guaranteed minimum of Tst_pulse), this will not stop a valid pulse on another state transition input that does meet minimum pulse width.

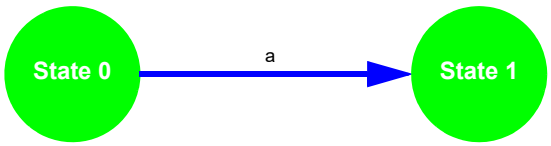

Figure 86. State Transition

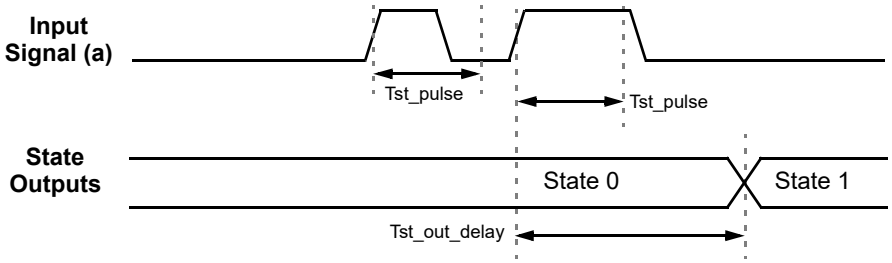

Figure 87. State Transition Pulse Input Timing

18.8.2 State Transition Competing Input Timing

There will be situations where two input signals can be valid inputs that will drive two different state transitions from a given state. In that sense, the two signals are “competing” (signals a and b in *Figure 88*), and the signal that arrives sooner should drive the state transition that will “win”, or drive the state transition. If one signal arrives Tst_comp before the other one, it is guaranteed to win, and the state transition that it codes for will be taken, as shown in *Figure 89*. If the two signals arrive within Tst_comp of each other, it will be indeterminate which state transition will win, but one of the transitions will take place as long as the winning signal satisfies the pulse width criteria described in the paragraph above, as shown in *Figure 90*.

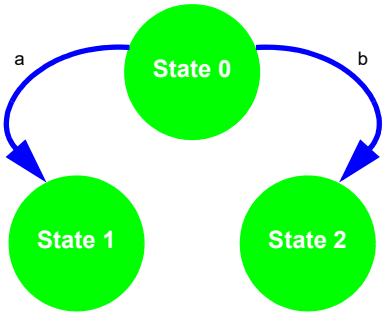

Figure 88. State Transition - Competing Inputs

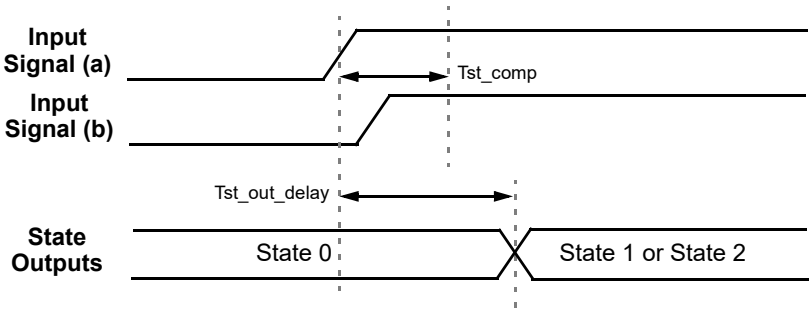

Figure 89. State Transition Timing - Competing Inputs Indeterminate

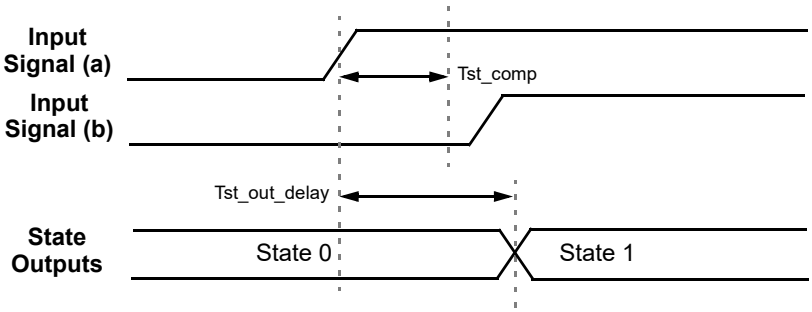

Figure 90. State Transition Timing - Competing Inputs Determinable

18.8.3 ASM State Transition Sequential Timing

It is possible to have a valid input signal for a transition out from a particular state be active before the state is active. If this is the case, the macrocell will only stay in that particular state for Tst_out_delay time before making the transition to the next state. An example of this sequential behavior is shown in *Figure 91* and the associated timing is shown in *Figure 92*.

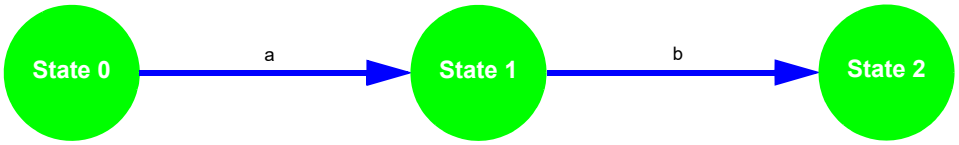

Figure 91. State Transition - Sequential

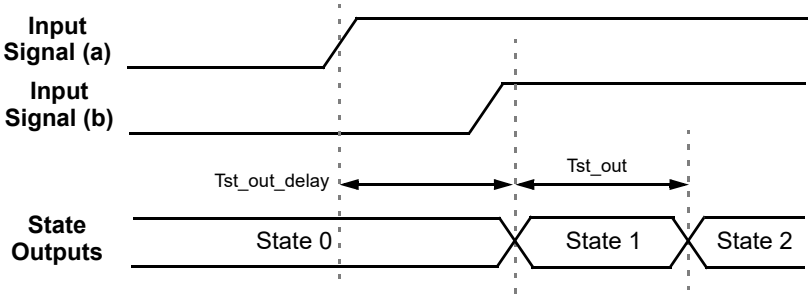

Figure 92. State Transition - Sequential Timing

18.8.4 State Transition Closed Cycling

It is possible to have a closed cycle of state transitions that will run continuously if there are valid inputs that are active at the same time. The rate at which the state transitions will take place is determined by Tst_out_delay. The example shown here in *Figure 93* involves cycling between two states, but any number of two – eight states can be included in state transition closed cycling of this nature. *Figure 94* shows the associated timing for closed cycling.

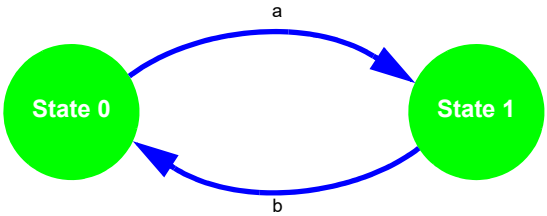

Figure 93. State Transition - Closed Cycling

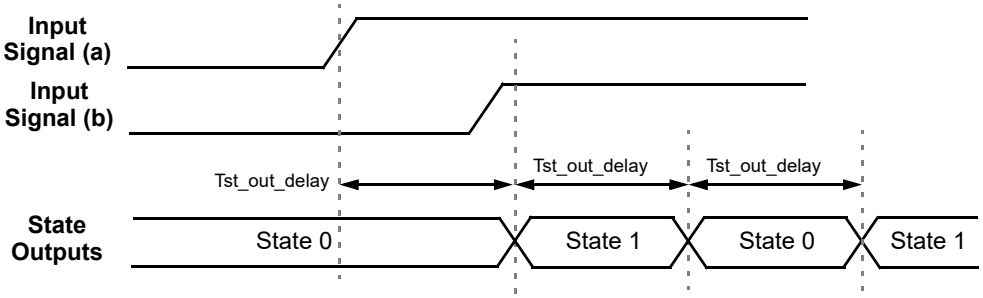

Figure 94. State Transition - Closed Cycling Timing

19.0 I²C Serial Communications Macrocell

19.1 I²C Serial Communications Macrocell Overview

In the standard use case for the GreenPAK devices, the configuration choices made by the user are stored as bit settings in the Non-Volatile Memory (NVM), and this information is transferred at startup time to volatile RAM registers that enable the configuration of the macrocells. Other RAM registers in the device are responsible for setting the connections in the Connection Matrix to route signals in the manner most appropriate for the user's application.

The I²C Serial Communications Macrocell in this device allows an I²C bus Master to read and write this information via a serial channel directly to the RAM registers, allowing the remote re-configuration of macrocells, and remote changes to signal chains within the device.

An I²C bus Master is also able read and write other register bits that are not associated with NVM memory. As an example, the input lines to the Connection Matrix can be read as digital register bits. These are the signal outputs of each of the macrocells in the device, giving an I²C bus Master the capability to remotely read the current value of any macrocell.

The user has the flexibility to control read access and write access via registers bits reg<1832>, reg<1870>, and reg<1871>. See section *19.5 I2C Serial Command Register Protection* for more details on I²C read/write memory protection.

Note: GreenPAK I²C is fully compatible with standard I²C protocol.

19.2 I²C Serial Communications Device Addressing

Each command to the I²C Serial Communications macrocell begins with a Control Byte. The bits inside this Control Byte are shown in *Figure 95*. After the Start bit, the first four bits are a control code, which can be set by the user in reg<1867:1864>. This gives the user flexibility on the chip level addressing of this device and other devices on the same I²C bus. The Block Address is the next three bits (A10,A9, A8), which will define the most significant bits in the addressing of the data to be read or written by the command. The last bit in the Control Byte is the R/$\overline{W}$ bit, which selects whether a read command or write command is requested, with a "1" selecting for a Read command, and a "0" selecting for a Write command. This Control Byte will be followed by an Acknowledge bit (ACK), which is sent by this device to indicate successful communication of the Control Byte data.

In the I²C-bus specification and user manual, there are two groups of eight addresses (0000 xxx and 1111 xxx) that are reserved for the special functions, such as a system General Call address. If the user of this device choses to set the Control Code to either "1111" or "0000" in a system with other slave device, please consult the I²C-bus specification and user manual to understand the addressing and implementation of these special functions, to insure reliable operation.

In the read and write command address structure, there are a total of 11 bits of addressing, each pointing to a unique byte of information, resulting in a total address space of 2K bytes. Of this 2K byte address space, the valid addresses accessible to the I²C Macrocell on the SLG46534 are in the range from 0 (0x00) to 255 (0xFF). The MSB address bits (A10, A9 and A8) will be "0" for all commands to the SLG46534.

With the exception of the Current Address Read command, all commands will have the Control Byte followed by the Word Address. *Figure 95* shows this basic command structure.

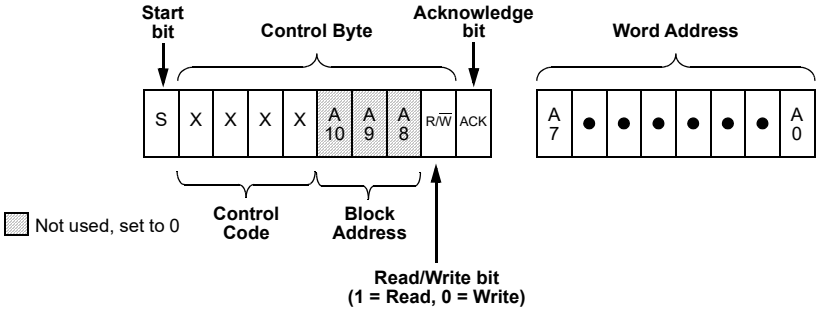

Figure 95. Basic Command Structure

19.3 I²C Serial General Timing

General timing characteristics for the I²C Serial Communications macrocell are shown in *Figure 96*. Timing specifications can be found in the AC Characteristics section.

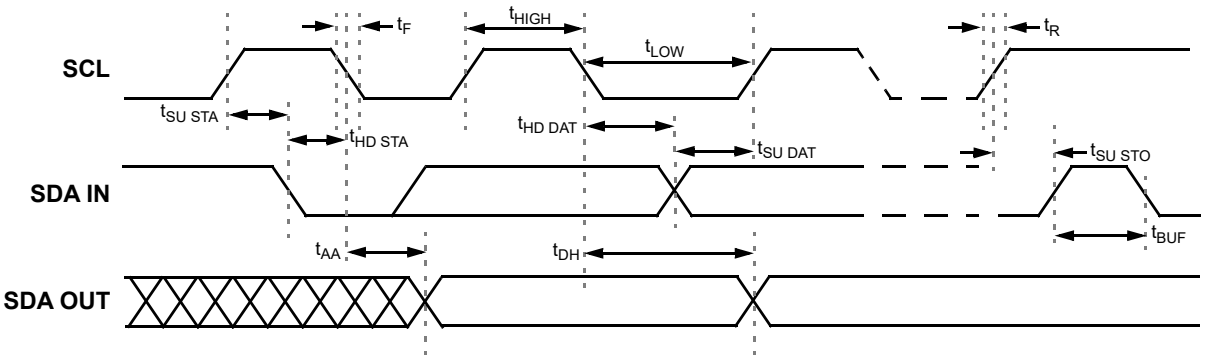

Figure 96. I²C General Timing Characteristics

19.4 I²C Serial Communications Commands

19.4.1 Byte Write Command

Following the Start condition from the Master, the Control Code [4 bits], the Block Address [3 bits] and the R/$\overline{W}$ bit (set to "0"), are placed onto the I²C bus by the Master. After the SLG46534 sends an Acknowledge bit (ACK), the next byte transmitted by the Master is the Word Address. The Block Address (A10, A9, A8), combined with the Word Address (A7 through A0), together set the internal address pointer in the SLG46534 where the data byte is to be written. After the SLG46534 sends another Acknowledge bit, the Master will transmit the data byte to be written into the addressed memory location. The SLG46534 again provides an Acknowledge bit and then the Master generates a Stop condition. The internal write cycle for the data will take place at the time that the SLG46534 generates the Acknowledge bit.

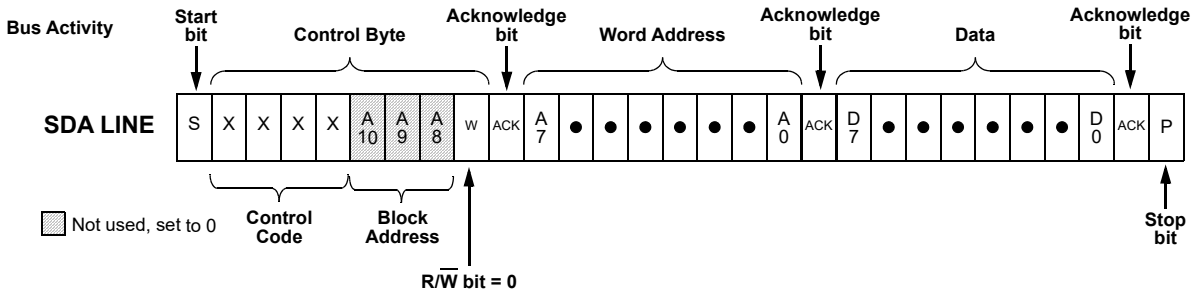

Figure 97. Byte Write Command, R/$\overline{W}$ = 0

19.4.2 Sequential Write Command

The write Control Byte, Word Address and the first data byte are transmitted to the SLG46534 in the same way as in a Byte Write command. However, instead of generating a Stop condition, the Master continues to transmit data bytes to the SLG46534. Each subsequent data byte will increment the internal address counter, and will be written into the next higher byte in the command addressing. As in the case of the Byte Write command, the internal write cycle will take place at the time that the SLG46534 generates the Acknowledge bit.

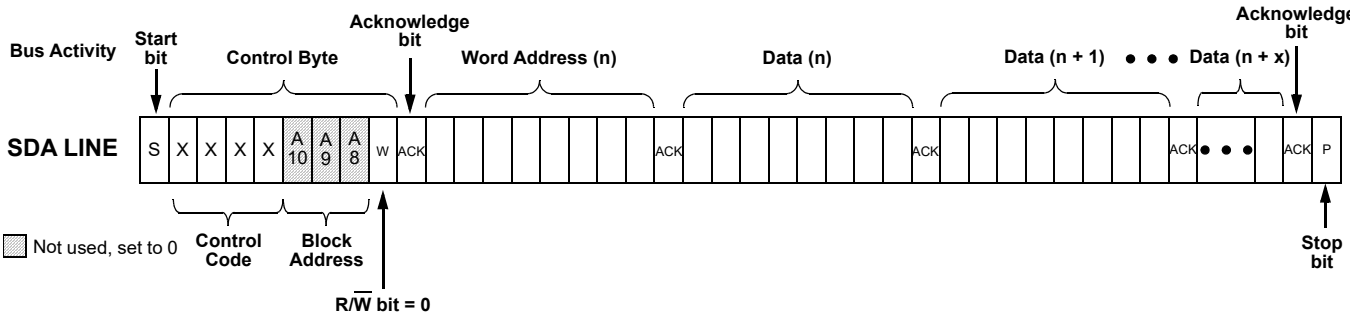

Figure 98. Sequential Write Command, R/$\overline{W}$ = 0

19.4.3 Current Address Read Command

The Current Address Read Command reads from the current pointer address location. The address pointer is incremented at the first STOP bit following any write control byte. For example, if a Write or Random Read (which contains a write control byte) writes or reads data up to address n, the address pointer would get incremented to n+1 upon the STOP of that command. Subsequently, a Current Address Read that follows would start reading data at n+1. The Current Address Read Command contains the Control Byte sent by the Master, with the R/$\overline{W}$ bit = “1”. The SLG46534 will issue an Acknowledge bit, and then transmit eight data bits for the requested byte. The Master will not issue an Acknowledge bit, and follow immediately with a Stop condition.

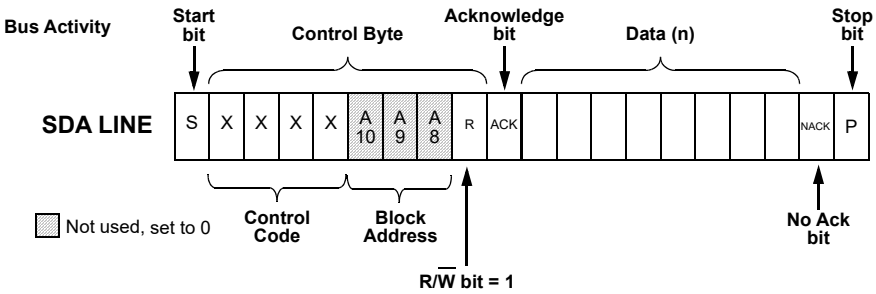

Figure 99. Current Address Read Command, R/$\overline{W}$ = 1

19.4.4 Random Read Command

The Random Read command starts with a Control Byte (with R/$\overline{W}$ bit set to “0”, indicating a write command) and Word Address to set the internal byte address, followed by a Start bit, and then the Control Byte for the read (exactly the same as the Byte Write command). The Start bit in the middle of the command will halt the decoding of a Write command, but will set the internal address counter in preparation for the second half of the command. After the Start bit, the Master issues a second control byte with the R/$\overline{W}$ bit set to “1”, after which the SLG46534 issues an Acknowledge bit, followed by the requested eight data bits.

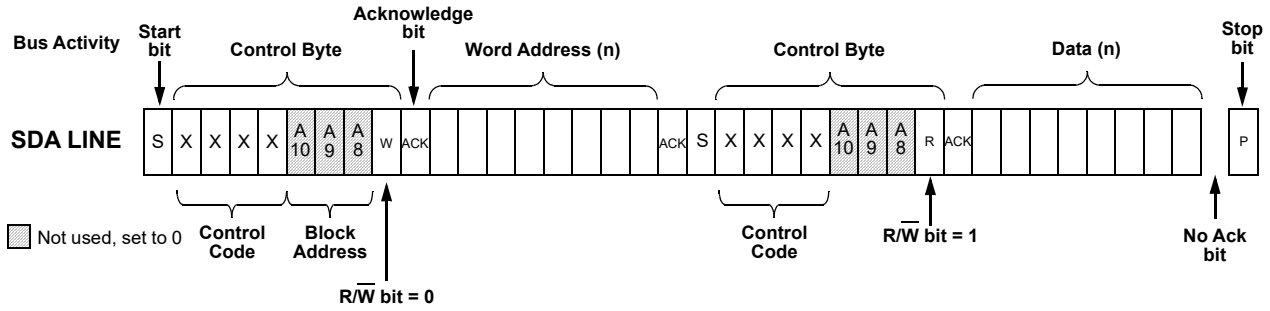

Figure 100. Random Read Command

19.4.5 Sequential Read Command

The Sequential Read command is initiated in the same way as a Current Address Read or Random Read command, except that once the SLG46534 transmits the first data byte, the Master issues an Acknowledge bit as opposed to a Stop condition in a random read. The Master can continue reading sequential bytes of data, and will terminate the command with a Stop condition.

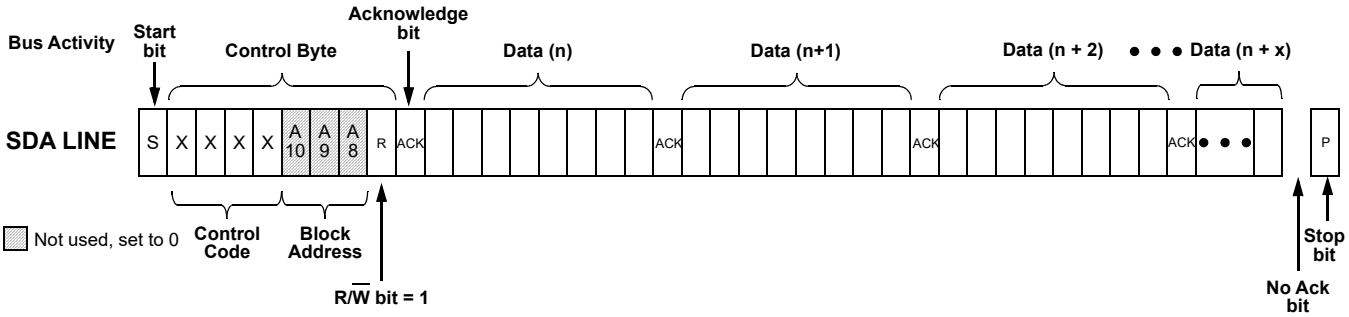

Figure 101. Sequential Read Command

19.4.6 I²C Serial Command Register Map

These register addresses are broken down into four Banks to give the user greater control on access to reading and writing information in each bank. Each of the four banks is 512 bits (64 bytes) in length. Writing information to register bits in these Banks will change the configuration of the device, resulting in either a change in the interconnection options provided by the Connection Matrix, or by changing the configuration of individual macrocells. During device use, all register bits can be read or written via I²C, unless protection bits are set to prevent this.

See Section *21.0 Appendix A - SLG46534 Register Definition* for detailed information on all register bits

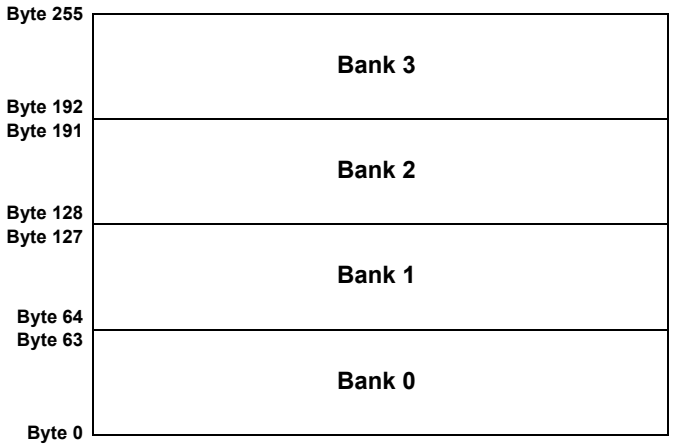

Figure 102. Register Bank Map

19.5 I²C Serial Command Register Protection

The memory space is divided into four banks, each of which has 512bits (64bytes). There are three bits that allow the user to define rules for reading and writing bits in each of these banks via I²C:

- reg<1832> I²C lock for read bits <1535:0> (Bank 0/1/2). If the system provides any read commands to the addresses in these three banks, the device will respond with 'FFH' in data field.
- reg<1871> I²C lock for write bits <1535:0> (Bank 0/1/2). If the system provides any write commands to the addresses in these three banks, the device will acknowledge these commands, but will not do internal writes to the register space.
- reg<1870> I²C lock for write all bits (Bank 0/1/2/3). If the system provides any write commands to the addresses in these four banks, the device will acknowledge these commands, but will not do internal writes to the register space.

Note 1. reg<1870> is higher priority than reg<1871>, and if reg<1870> is set, than reg<1871> does not have any effect.

Note 2. If the user sets Pins 8 and 9 function to a selection other than SDA and SCL, all access via I²C will be disabled.

If reg <1870> is not set, register bits in Bank 3 are open to read and write commands via I²C with the following exceptions:

- reg<1663> IO Latching Enable During I2C Write Interface is always protected from I²C write, see Note 3.
- reg<1871> Bank 0/1/2 I²C-write protection bit is always protected from I²C write
- reg<1867:1864> I²C Control Code Bit [3:0] is always protected from I²C write

Note 3. If reg<1663> = 1, all outputs are latched while inputs and internal macrocells retain their status during I²C write

Note 4. Any write commands that come to the device via I²C that are not blocked, based on the protection bits, will change the contents of the RAM register bits that mirror the NVM bits. These write commands will not change the NVM bits themselves, and a POR event will restore the register bits to original programmed contents of the NVM.

See Section *21.0 Appendix A - SLG46534 Register Definition* for detailed information on all registers.

19.5.1 Register Read/Write Protection

There are six read/write protect modes for the design sequence from being corrupted or copied. See *Table 84* for details.

Table 84. Read/Write Protection Options

Bank	Byte	Bits	Description	Lock Status					
				Unlocked	Locked for read bits <1535:0>	Locked for write bits <1535:0>	Locked for write all bits	Locked for read and write bits <1535:0>	Locked for read bits <1535:0> and write all bits
				reg <1832>=0, <1871>=0, <1870>=0	reg <1832>=1, <1871>=0, <1870>=0	reg <1832>=0, <1871>=0, <1870>=0	reg <1832>=0, <1871>=x, <1870>=1	reg <1832>=1, <1871>=1, <1870>=0	reg <1832>=1, <1871>=x, <1870>=1
0	0-63	511-0	Connection Matrix Outputs Configuration	R/W	W	R	R	-	-
1	64-109	879-512		R/W	W	R	R	-	-
	110-127	880-1023	Reserved	-	-	-	-	-	-
2	128-186	1495-1024	Function Configuration for PINs, LUTs/DFFs, OSC, ASM and some configuration for DLYs, ACMP	R/W	W	R	R	-	-
	187-191	1535-1496	Reserved	-	-	-	-	-	-
3	192-206	1655-1536	CNT/DLY counter data and some LUTs truth table, ACMP Vref	R/W	R/W	R/W	R	R/W	R
	207	1663	IO Latching Enable During I2C Write Interface	R	R	R	R	R	R
		1662	I2C reset bit with reloading NVM into Data register	R/W	R/W	R/W	R	R/W	R
		1661-1659	Reserved	R	R	R	R	R	R
		1658-1656	OSC Power Control	R/W	R/W	R/W	R	R/W	R

Table 84. Read/Write Protection Options

Bank	Byte	Bits	Description	Lock Status					
				Unlocked	Locked for read bits <1535:0>	Locked for write bits <1535:0>	Locked for write all bits	Locked for read and write bits <1535:0>	Locked for read bits <1535:0> and write all bits
				reg <1832>=0, <1871>=0, <1870>=0	reg <1832>=1, <1871>=0, <1870>=0	reg <1832>=0, <1871>=0, <1870>=0	reg <1832>=0, <1871>=x, <1870>=1	reg <1832>=1, <1871>=1, <1870>=0	reg <1832>=1, <1871>=x, <1870>=1
3	208-223	1791-1664	ASM output RAM and User configurable RAM / OTP	R/W	R/W	R/W	R	R/W	R
	224-227	1823-1792	Reserved	-	-	-	-	-	-
	228	1831-1824	Reserved	R/W	R/W	R/W	R	R/W	R
	229	1839-1836	Product Family ID	R	R	R	R	R	R
		1835-1834	Reserved	-	-	-	-	-	-
		1833	Reserved	R	R	R	R	R	R
		1832	I2C Lock for read bits<1535:0>	R	R	R	R	R	R
	230	1847-1840	Pattern ID	R/W	R/W	R/W	R	R/W	R
	231	1855-1848	Reserved	R	R	R	R	R	R
	232	1863-1856	Reserved	R	R	R	R	R	R
	233	1871	I2C Lock for write bits<1535:0>	R	R	R	R	R	R
		1870	I2C Lock for write all bits	R	R	R	R	R	R
		1869-1868	Reserved	-	-	-	-	-	-
		1867-1864	I2C Control Code	R	R	R	R	R	R
	234-239	1919-1872	Counter Current Value	R	R	R	R	R	R
	240-243	1951-1920	Macrocells Output Values (Connection Matrix Inputs)	R	R	R	R	R	R
	244	1959-1952	Connection Matrix Virtual Inputs	R/W	R/W	R/W	R	R/W	R
	245-247	2007-1983	Macrocells Output Values (Connection Matrix Inputs)	R	R	R	R	R	R
	248-250	2007-1984	Reserved	R	R	R	R	R	R

Table 84. Read/Write Protection Options

Bank	Byte	Bits	Description	Lock Status					
				Unlocked	Locked for read bits <1535:0>	Locked for write bits <1535:0>	Locked for write all bits	Locked for read and write bits <1535:0>	Locked for read bits <1535:0> and write all bits
				reg <1832>=0, <1871>=0, <1870>=0	reg <1832>=1, <1871>=0, <1870>=0	reg <1832>=0, <1871>=0, <1870>=0	reg <1832>=0, <1871>=x, <1870>=1	reg <1832>=1, <1871>=1, <1870>=0	reg <1832>=1, <1871>=x, <1870>=1
3	251	2015-2008	Reserved	R/W	R/W	R/W	R	R/W	R
	252-253	2031-2016	Reserved	R	R	R	R	R	R
	254	2039-2032	Reserved	R/W	R/W	R/W	R	R/W	R
	255	2047-2040	Reserved	R/W	R/W	R/W	R	R/W	R

R/W	Allow Read and Write Data
W	Allow Write Data Only
R	Allow Read Data Only
-	The Data is protected for Read and Write

19.5.1.1 I^{2}C Serial Reset Command

If I^{2}C serial communication is established with the device, it is possible to reset the device to initial power up conditions, including configuration of all macrocells, and all connections provided by the Connection Matrix. This is implemented by setting reg<1662> I^{2}C reset bit to “1”, which causes the device to re-enable the Power On Reset (POR) sequence, including the reload of all register data from NVM. During the POR sequence, the outputs of the device will be in tri-state. After the reset has taken place, the contents of reg<1662> will be set to “0” automatically. The timing diagram shown below illustrates the sequence of events for this reset function.

Note: I^{2}C Serial Reset Command is not available during emulation.

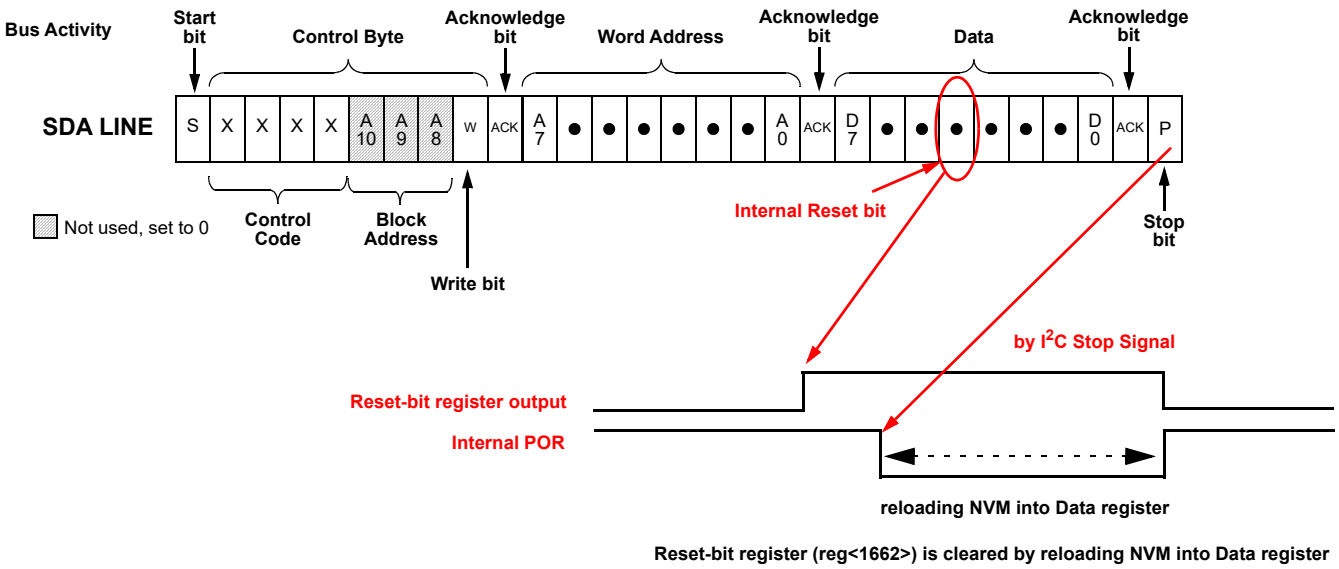

1) I^2C write with reg<1662>=1 (I^2C reset bit with reloading NVM into Data register)
2) POR go to LOW and reloading NVM into Data register start after "STOP" of I^2C
3) POR go to HIGH after reloading NVM into Data register

Figure 103. Reset Command Timing

19.5.1.2 Reading Counter Data via I^{2}C

The current count value in four counters in the device can be read via I^{2}C. The counters that have this additional functionality are 16-bit CNT0 and CNT1, and 8-bit counters CNT4 and CNT6.

19.5.1.3 User RAM and OTP Memory Array

There are eight bytes of RAM memory that can be read and written remotely by I^{2}C commands. The initial contents of this memory space can be selected by the user, and this information will be transferred from OTP memory to the RAM memory space during the power-up sequence. The lowest order byte in this array (User Configurable RAM/OTP Byte 0) is located at I^{2}C address 0xD8, and the highest order byte in this array is located at I^{2}C address 0xDF.

Table 85. RAM Array Table

I2C Address (hex)	Highest Bit Address	Lowest Bit Address	Memory Byte
D8	1735	1728	User Configurable RAM/OTP Byte 0
D9	1743	1736	User Configurable RAM/OTP Byte 1
DA	1751	1744	User Configurable RAM/OTP Byte 2
DB	1759	1752	User Configurable RAM/OTP Byte 3
DC	1767	1760	User Configurable RAM/OTP Byte 4
DD	1775	1768	User Configurable RAM/OTP Byte 5
DE	1783	1776	User Configurable RAM/OTP Byte 6
DF	1791	1784	User Configurable RAM/OTP Byte 7

20.0 External Clocking

The SLG46534 supports several ways to use an external, higher accuracy clock as a reference source for internal operations

20.1 Crystal Mode

When reg<1136> is set to 1, an external crystal can be connected to pins 12 and 13 for supplying an accurate clock source. See section 16.0 Crystal Oscillator. An external clocking signal on pin 13 can be used in place of the crystal. The high and low limits for crystal frequency that can be selected are 32.768 kHz and 40 MHz.

20.2 Pin 14 Source for 25 KHz / 2 MHz Clock

When reg<1358> is set to 1, an external clocking signal on pin 14 will be routed in place of the internal RC oscillator derived 25 kHz/2 MHz clock source. See *Figure 62*. The high and low limits for external frequency that can be selected are 0 MHz and 77 MHz.

20.3 Pin 13 Source for 25 MHz Clock

When reg<1357> is set to 1, an external clocking signal on pin 13 will be routed in place of the internal RC oscillator derived 25 MHz clock source. See *Figure 63*. The high and low limits for external frequency that can be selected are 0 MHz and 84 MHz.

21.0 Appendix A - SLG46534 Register Definition

Address		Signal Function	Register Bit Definition	I²C Interface	
Byte	Register Bit			Read	Write
Note: For reg<0> to reg<1495>, I²C Read is valid (assuming reg <1832> = 0), I²C Write is valid (assuming reg <1871> = 0)					
Matrix 64-to-1 MUX's 6 selection bits					
00	reg<5:0>	Matrix OUT	ASM-state0-EN0	Valid	Valid
	reg<7:6>	Reserved		Valid	Valid
01	reg<13:8>	Matrix OUT	ASM-state0-EN1	Valid	Valid
	reg<15:14>	Reserved		Valid	Valid
02	reg<21:16>	Matrix OUT	ASM-state0-EN2	Valid	Valid
	reg<23:22>	Reserved		Valid	Valid
03	reg<29:24>	Matrix OUT	ASM-state1-EN0	Valid	Valid
	reg<31:30>	Reserved		Valid	Valid
04	reg<37:32>	Matrix OUT	ASM-state1-EN1	Valid	Valid
	reg<39:38>	Reserved		Valid	Valid
05	reg<45:40>	Matrix OUT	ASM-state1-EN2	Valid	Valid
	reg<47:46>	Reserved		Valid	Valid
06	reg<53:48>	Matrix OUT	ASM-state2-EN0	Valid	Valid
	reg<55:54>	Reserved		Valid	Valid
07	reg<61:56>	Matrix OUT	ASM-state2-EN1	Valid	Valid
	reg<63:62>	Reserved		Valid	Valid
08	reg<69:64>	Matrix OUT	ASM-state2-EN2	Valid	Valid
	reg<71:70>	Reserved		Valid	Valid
09	reg<77:72>	Matrix OUT	ASM-state3-EN0	Valid	Valid
	reg<79:78>	Reserved		Valid	Valid
0A	reg<85:80>	Matrix OUT	ASM-state3-EN1	Valid	Valid
	reg<87:86>	Reserved		Valid	Valid
0B	reg<93:88>	Matrix OUT	ASM-state3-EN2	Valid	Valid
	reg<95:94>	Reserved		Valid	Valid
0C	reg<101:96>	Matrix OUT	ASM-state4-EN0	Valid	Valid
	reg<103:102>	Reserved		Valid	Valid
0D	reg<109:104>	Matrix OUT	ASM-state4-EN1	Valid	Valid
	reg<111:110>	Reserved		Valid	Valid
0E	reg<117:112>	Matrix OUT	ASM-state4-EN2	Valid	Valid
	reg<119:118>	Reserved		Valid	Valid
0F	reg<125:120>	Matrix OUT	ASM-state5-EN0	Valid	Valid
	reg<127:126>	Reserved		Valid	Valid
10	reg<133:128>	Matrix OUT	ASM-state5-EN1	Valid	Valid
	reg<135:134>	Reserved		Valid	Valid
11	reg<141:136>	Matrix OUT	ASM-state5-EN2	Valid	Valid
	reg<143:142>	Reserved		Valid	Valid
12	reg<149:144>	Matrix OUT	ASM-state6-EN0	Valid	Valid
	reg<151:150>	Reserved		Valid	Valid

Address		Signal Function	Register Bit Definition	I²C Interface	
Byte	Register Bit			Read	Write
13	reg<157:152>	Matrix OUT	ASM-state6-EN1	Valid	Valid
	reg<159:158>	Reserved		Valid	Valid
14	reg<165:160>	Matrix OUT	ASM-state6-EN2	Valid	Valid
	reg<167:166>	Reserved		Valid	Valid
15	reg<173:168>	Matrix OUT	ASM-state7-EN0	Valid	Valid
	reg<175:174>	Reserved		Valid	Valid
16	reg<181:176>	Matrix OUT	ASM-state7-EN1	Valid	Valid
	reg<183:182>	Reserved		Valid	Valid
17	reg<189:184>	Matrix OUT	ASM-state7-EN2	Valid	Valid
	reg<191:190>	Reserved		Valid	Valid
18	reg<197:192>	Matrix OUT	ASM-state-RSTB	Valid	Valid
	reg<199:198>	Reserved		Valid	Valid
19	reg<205:200>	Reserved		Valid	Valid
	reg<207:206>	Reserved		Valid	Valid
1A	reg<213:208>	Reserved		Valid	Valid
	reg<215:214>	Reserved		Valid	Valid
1B	reg<221:216>	Matrix OUT	PIN3 Digital Output Source	Valid	Valid
	reg<223:222>	Reserved		Valid	Valid
1C	reg<229:224>	Reserved		Valid	Valid
	reg<231:230>	Reserved		Valid	Valid
1D	reg<237:232>	Reserved		Valid	Valid
	reg<239:238>	Reserved		Valid	Valid
1E	reg<245:240>	Matrix OUT	PIN4 Digital Output Source	Valid	Valid
	reg<247:246>	Reserved		Valid	Valid
1F	reg<253:248>	Matrix OUT	PIN5 Digital Output Source	Valid	Valid
	reg<255:254>	Reserved		Valid	Valid
20	reg<261:256>	Matrix OUT	PIN5 Output Enable	Valid	Valid
	reg<263:262>	Reserved		Valid	Valid
21	reg<269:264>	Matrix OUT	PIN6 Digital Output Source (SCL with VI/Input & NMOS open-drain)	Valid	Valid
	reg<271:270>	Reserved		Valid	Valid
22	reg<277:272>	Matrix OUT	PIN7 Digital Output Source (SDA with VI/Input & NMOS open-drain)	Valid	Valid
	reg<279:278>	Reserved		Valid	Valid
23	reg<285:280>	Matrix OUT	PIN8 Digital Output Source	Valid	Valid
	reg<287:286>	Reserved		Valid	Valid
24	reg<293:288>	Matrix OUT	PIN8 Output Enable	Valid	Valid
	reg<295:294>	Reserved		Valid	Valid
25	reg<301:296>	Matrix OUT	PIN10 Digital Output Source	Valid	Valid
	reg<303:302>	Reserved		Valid	Valid
26	reg<309:304>	Reserved		Valid	Valid
	reg<311:310>	Reserved		Valid	Valid

Address		Signal Function	Register Bit Definition	I²C Interface	
Byte	Register Bit			Read	Write
27	reg<317:312>	Reserved		Valid	Valid
	reg<319:318>	Reserved		Valid	Valid
28	reg<325:320>	Matrix OUT	PIN11 Digital Output Source	Valid	Valid
	reg<327:326>	Reserved		Valid	Valid
29	reg<333:328>	Matrix OUT	PIN11 Output Enable	Valid	Valid
	reg<335:334>	Reserved		Valid	Valid
2A	reg<341:336>	Reserved		Valid	Valid
	reg<343:342>	Reserved		Valid	Valid
2B	reg<349:344>	Matrix OUT	PIN12 Digital Output Source	Valid	Valid
	reg<351:350>	Reserved		Valid	Valid
2C	reg<357:352>	Matrix OUT	PIN12 Output Enable	Valid	Valid
	reg<359:358>	Reserved		Valid	Valid
2D	reg<365:360>	Matrix OUT	PIN13 Digital Output Source	Valid	Valid
	reg<367:366>	Reserved		Valid	Valid
2E	reg<373:368>	Reserved		Valid	Valid
	reg<375:374>	Reserved		Valid	Valid
2F	reg<381:376>	Reserved		Valid	Valid
	reg<383:382>	Reserved		Valid	Valid
30	reg<389:384>	Reserved		Valid	Valid
	reg<391:390>	Reserved		Valid	Valid
31	reg<397:392>	Reserved		Valid	Valid
	reg<399:398>	Reserved		Valid	Valid
32	reg<405:400>	Matrix OUT	PIN14 Digital Output Source	Valid	Valid
	reg<407:406>	Reserved		Valid	Valid
33	reg<413:408>	Matrix OUT	ACMP0 PDB (Power Down)	Valid	Valid
	reg<415:414>	Reserved		Valid	Valid
34	reg<421:416>	Matrix OUT	ACMP1 PDB (Power Down)	Valid	Valid
	reg<423:422>	Reserved		Valid	Valid
35	reg<429:424>	Matrix OUT	ACMP2 PDB (Power Down)	Valid	Valid
	reg<431:430>	Reserved		Valid	Valid
36	reg<437:432>	Reserved		Valid	Valid
	reg<439:438>	Reserved		Valid	Valid
37	reg<445:440>	Matrix OUT	Input of Filter_0 with fixed time edge detector	Valid	Valid
	reg<447:446>	Reserved		Valid	Valid
38	reg<453:448>	Matrix OUT	Input of Filter_1 with fixed time edge detector	Valid	Valid
	reg<455:454>	Reserved		Valid	Valid
39	reg<461:456>	Matrix OUT	Input of Programmable Delay & Edge Detector	Valid	Valid
	reg<463:462>	Reserved		Valid	Valid
3A	reg<469:464>	Matrix OUT	OSC 25KHz/2MHz PDB (Power Down)	Valid	Valid
	reg<471:470>	Reserved		Valid	Valid

Address		Signal Function	Register Bit Definition	I²C Interface	
Byte	Register Bit			Read	Write
3B	reg<477:472>	Matrix OUT	OSC 25MHz PDB (Power Down)	Valid	Valid
	reg<479:478>	Reserved		Valid	Valid
3C	reg<485:480>	Matrix OUT	IN0 of LUT2_0 or Clock Input of DFF0	Valid	Valid
	reg<487:486>	Reserved		Valid	Valid
3D	reg<493:488>	Matrix OUT	IN1 of LUT2_0 or Data Input of DFF0	Valid	Valid
	reg<495:494>	Reserved		Valid	Valid
3E	reg<501:496>	Matrix OUT	IN0 of LUT2_1 or Clock Input of DFF1	Valid	Valid
	reg<503:502>	Reserved		Valid	Valid
3F	reg<509:504>	Matrix OUT	IN1 of LUT2_1 or Data Input of DFF1	Valid	Valid
	reg<511:510>	Reserved		Valid	Valid
40	reg<517:512>	Matrix OUT	IN0 of LUT2_2 or Clock Input of DFF2	Valid	Valid
	reg<519:518>	Reserved		Valid	Valid
41	reg<525:520>	Matrix OUT	IN1 of LUT2_2 or Data Input of DFF2	Valid	Valid
	reg<527:526>	Reserved		Valid	Valid
42	reg<533:528>	Matrix OUT	IN0 of LUT2_3 or Clock Input of PGEN	Valid	Valid
	reg<535:534>	Reserved		Valid	Valid
43	reg<541:536>	Matrix OUT	IN1 of LUT2_3 or RSTB of PGEN	Valid	Valid
	reg<543:542>	Reserved		Valid	Valid
44	reg<549:544>	Matrix OUT	IN0 of LUT3_0 or Clock Input of DFF3	Valid	Valid
	reg<551:550>	Reserved		Valid	Valid
45	reg<557:552>	Matrix OUT	IN1 of LUT3_0 or Data Input of DFF3	Valid	Valid
	reg<559:558>	Reserved		Valid	Valid
46	reg<565:560>	Matrix OUT	IN2 of LUT3_0 or RSTB (SETB) of DFF3	Valid	Valid
	reg<567:566>	Reserved		Valid	Valid
47	reg<573:568>	Matrix OUT	IN0 of LUT3_1 or Clock Input of DFF4	Valid	Valid
	reg<575:574>	Reserved		Valid	Valid
48	reg<581:576>	Matrix OUT	IN1 of LUT3_1 or Data Input of DFF4	Valid	Valid
	reg<583:582>	Reserved		Valid	Valid
49	reg<589:584>	Matrix OUT	IN2 of LUT3_1 or RSTB (SETB) of DFF4	Valid	Valid
	reg<591:590>	Reserved		Valid	Valid
4A	reg<597:592>	Matrix OUT	IN0 of LUT3_2 or Clock Input of DFF5	Valid	Valid
	reg<599:598>	Reserved		Valid	Valid
4B	reg<605:600>	Matrix OUT	IN1 of LUT3_2 or Data Input of DFF5	Valid	Valid
	reg<607:606>	Reserved		Valid	Valid
4C	reg<613:608>	Matrix OUT	IN2 of LUT3_2 or RSTB (SETB) of DFF5	Valid	Valid
	reg<615:614>	Reserved		Valid	Valid
4D	reg<621:616>	Matrix OUT	IN0 of LUT3_3 or Clock Input of DFF6	Valid	Valid
	reg<623:622>	Reserved		Valid	Valid
4E	reg<629:624>	Matrix OUT	IN1 of LUT3_3 or Data Input of DFF6	Valid	Valid
	reg<631:630>	Reserved		Valid	Valid
4F	reg<637:632>	Matrix OUT	IN2 of LUT3_3 or RSTB (SETB) of DFF6	Valid	Valid
	reg<639:638>	Reserved		Valid	Valid

Address		Signal Function	Register Bit Definition	I²C Interface	
Byte	Register Bit			Read	Write
50	reg<645:640>	Matrix OUT	IN0 of LUT3_4 or Clock Input of DFF7	Valid	Valid
	reg<647:646>	Reserved		Valid	Valid
51	reg<653:648>	Matrix OUT	IN1 of LUT3_4 or Data Input of DFF7	Valid	Valid
	reg<655:654>	Reserved		Valid	Valid
52	reg<661:656>	Matrix OUT	IN2 of LUT3_4 or RSTB (SETB) of DFF7	Valid	Valid
	reg<663:662>	Reserved		Valid	Valid
53	reg<669:664>	Matrix OUT	IN0 of LUT3_5 or Delay2 Input (or Counter2 RST Input)	Valid	Valid
	reg<671:670>	Reserved		Valid	Valid
54	reg<677:672>	Matrix OUT	IN1 of LUT3_5 or External Clock Input of Delay2 (or Counter2)	Valid	Valid
	reg<679:678>	Reserved		Valid	Valid
55	reg<685:680>	Matrix OUT	IN2 of LUT3_5	Valid	Valid
	reg<687:686>	Reserved		Valid	Valid
56	reg<693:688>	Matrix OUT	IN0 of LUT3_6 or Delay3 Input (or Counter3 RST Input)	Valid	Valid
	reg<695:694>	Reserved		Valid	Valid
57	reg<701:696>	Matrix OUT	IN1 of LUT3_6 or External Clock Input of Delay3 (or Counter3)	Valid	Valid
	reg<703:702>	Reserved		Valid	Valid
58	reg 709:704>	Matrix OUT	IN2 of LUT3_6	Valid	Valid
	reg<711:710>	Reserved		Valid	Valid
59	reg<717:712>	Matrix OUT	IN0 of LUT3_7 or Delay4 Input (or Counter4 RST Input)	Valid	Valid
	reg<719:718>	Reserved		Valid	Valid
5A	reg<725:720>	Matrix OUT	IN1 of LUT3_7 or External Clock Input of Delay4 (or Counter4)	Valid	Valid
	reg<727:726>	Reserved		Valid	Valid
5B	reg<733:728>	Matrix OUT	IN2 of LUT3_7	Valid	Valid
	reg<735:734>	Reserved		Valid	Valid
5C	reg<741:736>	Matrix OUT	IN0 of LUT3_8 or Delay5 Input (or Counter5 RST Input)	Valid	Valid
	reg<743:742>	Reserved		Valid	Valid
5D	reg<749:744>	Matrix OUT	IN1 of LUT3_8 or External Clock Input of Delay5 (or Counter5)	Valid	Valid
	reg<751:750>	Reserved		Valid	Valid
5E	reg<757:752>	Matrix OUT	IN2 of LUT3_8	Valid	Valid
	reg<759:758>	Reserved		Valid	Valid
5F	reg<765:760>	Matrix OUT	IN0 of LUT3_9 or Delay6 Input (or Counter6 RST Input)	Valid	Valid
	reg<767:766>	Reserved		Valid	Valid
60	reg<773:768>	Matrix OUT	IN1 of LUT3_9 or External Clock Input of Delay6 (or Counter6)	Valid	Valid
	reg<775:774>	Reserved		Valid	Valid

Address		Signal Function	Register Bit Definition	I²C Interface	
Byte	Register Bit			Read	Write
61	reg<781:776>	Matrix OUT	IN2 of LUT3_9	Valid	Valid
	reg<783:782>	Reserved		Valid	Valid
62	reg<789:784>	Matrix OUT	IN0 of LUT3_10 or Input of Pipe Delay	Valid	Valid
	reg<791:790>	Reserved		Valid	Valid
63	reg<797:792>	Matrix OUT	IN1 of LUT3_10 or RSTB of Pipe Delay	Valid	Valid
	reg<799:798>	Reserved		Valid	Valid
64	reg<805:800>	Matrix OUT	IN2 of LUT3_10 or Clock of Pipe Delay	Valid	Valid
	reg<807:806>	Reserved		Valid	Valid
65	reg<813:808>	Matrix OUT	IN0 of LUT4_0 or Delay0 Input (or Counter0 RST/SET Input)	Valid	Valid
	reg<815:814>	Reserved		Valid	Valid
66	reg<821:816>	Matrix OUT	IN1 of LUT4_0 or External Clock Input of Delay0 (or Counter0)	Valid	Valid
	reg<823:822>	Reserved		Valid	Valid
67	reg<829:824>	Matrix OUT	IN2 of LUT4_0 or UP Input of FSM0	Valid	Valid
	reg<831:830>	Reserved		Valid	Valid
68	reg<837:832>	Matrix OUT	IN3 of LUT4_0 or KEEP Input of FSM0	Valid	Valid
	reg<839:838>	Reserved		Valid	Valid
69	reg<845:840>	Matrix OUT	IN0 of LUT4_1 or Delay1 Input (or Counter1 RST/SET Input)	Valid	Valid
	reg<847:846>	Reserved		Valid	Valid
6A	reg<853:848>	Matrix OUT	IN1 of LUT4_1 or External Clock Input of Delay1 (or Counter1)	Valid	Valid
	reg<855:854>	Reserved		Valid	Valid
6B	reg<861:856>	Matrix OUT	IN2 of LUT4_1 or UP Input of FSM1	Valid	Valid
	reg<863:862>	Reserved		Valid	Valid
6C	reg<869:864>	Matrix OUT	IN3 of LUT4_1 or KEEP Input of FSM1	Valid	Valid
	reg<871:870>	Reserved		Valid	Valid
6D	reg<877:872>	Matrix OUT	PD of crystal oscillator by reg<1268>	Valid	Valid
	reg<879:878>	Reserved		Valid	Valid
6E	reg<887:880>	Reserved		Valid	Valid
6F	reg<895:888>	Reserved		Valid	Valid
70	reg<903:896>	Reserved		Valid	Valid
71	reg<911:904>	Reserved		Valid	Valid
72	reg<919:912>	Reserved		Valid	Valid
73	reg<927:920>	Reserved		Valid	Valid
74	reg<935:928>	Reserved		Valid	Valid
75	reg<943:936>	Reserved		Valid	Valid
76	reg<951:944>	Reserved		Valid	Valid
77	reg<959:952>	Reserved		Valid	Valid
78	reg<967:960>	Reserved		Valid	Valid
79	reg<975:968>	Reserved		Valid	Valid
7A	reg<983:976>	Reserved		Valid	Valid
7B	reg<991:984>	Reserved		Valid	Valid

Address		Signal Function	Register Bit Definition	I²C Interface	
Byte	Register Bit			Read	Write
7C	reg<999:992>	Reserved		Valid	Valid
7D	reg<1007:1000>	Reserved		Valid	Valid
7E	reg<1015:1008>	Reserved		Valid	Valid
7F	reg<1023:1016>	Reserved		Valid	Valid
PIN 2					
80	reg<1024>	Reserved		Valid	Valid
	reg<1025>	Reserved		Valid	Valid
	reg<1027:1026>	Reserved		Valid	Valid
	reg<1029:1028>	PIN2 Pull Down Resistor Value Selection	00: Floating 01: 10 K 10: 100 K 11: 1 M	Valid	Valid
	reg<1031:1030>	PIN2 Mode Control	00: Digital Input without Schmitt Trigger 01: Digital Input with Schmitt Trigger 10: Low Voltage Digital Input 11: Reserved	Valid	Valid
Reserved					
81	reg<1032>	Reserved			
	reg<1033>	Reserved			
	reg<1035:1034>	Reserved			
	reg<1037:1036>	Reserved			
	reg<1039:1038>	Reserved			
PIN 3					
82	reg<1040>	Reserved		Valid	Valid
	reg<1041>	PIN3 Driver Strength Selection	0: 1X 1: 2X	Valid	Valid
	reg<1042>	PIN3 Pull Up/Down Resistor Selection	0: Pull Down Resistor 1: Pull Up Resistor	Valid	Valid
	reg<1044:1043>	PIN3 Pull Up/Down Resistor Value Selection	00: Floating 01: 10 K 10: 100 K 11: 1 M	Valid	Valid
	reg<1047:1045>	PIN3 Mode Control	000: Digital Input without Schmitt Trigger 001: Digital Input with Schmitt Trigger 010: Low Voltage Digital Input 011: Reserved 100: Push Pull 101: Open Drain NMOS 110: Open Drain PMOS 111: Open Drain NMOS	Valid	Valid
Reserved					
83	reg<1048>	Reserved			
	reg<1049>	Reserved			
	reg<1051:1050>	Reserved			
	reg<1053:1052>	Reserved			
	reg<1055:1054>	Reserved			

Address		Signal Function	Register Bit Definition	I²C Interface	
Byte	Register Bit			Read	Write
PIN 4					
84	reg<1056>	Reserved		Valid	Valid
	reg<1057>	PIN4 Driver Strength Selection	0: 1X 1: 2X	Valid	Valid
	reg<1058>	PIN4 Pull Up/Down Resistor Selection	0: Pull Down Resistor 1: Pull Up Resistor	Valid	Valid
	reg<1060:1059>	PIN4 Pull Up/Down Resistor Value Selection	00: Floating 01: 10 K 10: 100 K 11: 1 M	Valid	Valid
	reg<1063:1061>	PIN4 Mode Control	000: Digital Input without Schmitt Trigger 001: Digital Input with Schmitt Trigger 010: Low Voltage Digital Input 011: Analog Input/Output 100: Push Pull 101: Open Drain NMOS 110: Open Drain PMOS 111: Analog Input & Open Drain	Valid	Valid
PIN 5					
85	reg<1064>	Reserved		Valid	Valid
	reg<1065>	PIN5 Pull Up/Down Resistor Selection	0: Pull Down Resistor 1: Pull Up Resistor	Valid	Valid
	reg<1067:1066>	PIN5 Pull Up/Down Resistor Value Selection	00: Floating 01: 10 K 10: 100 K 11: 1 M	Valid	Valid
	reg<1069:1068>	PIN5 Mode Control (sig_pin5_oe=0)	00: Digital Input without Schmitt Trigger 01: Digital Input with Schmitt Trigger 10: Low Voltage Digital Input 11: Analog Input/Output	Valid	Valid
	reg<1071:1070>	PIN5 Mode Control (sig_pin5_oe=1)	00: Push Pull 1X 01: Push Pull 2X 10: Open Drain NMOS 1X 11: Open Drain NMOS 2X	Valid	Valid
PIN 6					
86	reg<1072>	Reserved		Valid	Valid
	reg<1073>	IO6 Driver Strength Selection	0: 1X 1: 2X	Valid	Valid
	reg<1074>	Select SCL & Virtual Input 0 or PIN6	0: SCL & Virtual Input 0 1: PIN6	Valid	Valid
	reg<1076:1075>	PIN6 (or SCL) Pull Down Resistor Value Selection	00: Floating 01: 10 K 10: 100 K 11: 1 M	Valid	Valid
86	reg<1079:1077>	PIN6 (or SCL) Mode Control	000: Digital Input without Schmitt Trigger 001: Digital Input with Schmitt Trigger, 010: Low Voltage Digital Input 011: Reserved 100: Open Drain NMOS 101: Open Drain NMOS 110: Open Drain NMOS 111: Reserved	Valid	Valid

Address		Signal Function	Register Bit Definition	I²C Interface	
Byte	Register Bit			Read	Write
PIN 7					
87	reg<1080>	Reserved		Valid	Valid
	reg<1081>	PIN7 (or SDA) Driver Strength Selection	0: 1X (I^2C up to 400 KHz) 1: 2X (I^2C up to 1 MHz)	Valid	Valid
	reg<1082>	Select SDA & Virtual Input 1 or PIN7	0: SDA & Virtual Input 1 1: PIN7	Valid	Valid
	reg<1084:1083>	PIN7 (or SDA) Pull Down Resistor Value Selection	00: Floating 01: 10 K 10: 100 K 11: 1 M	Valid	Valid
	reg<1087:1085>	PIN7 (or SDA) Mode Control	000: Digital Input without Schmitt Trigger 001: Digital Input with Schmitt Trigger 010: Low Voltage Digital Input 011: Reserved 100: Open Drain NMOS 101: Open Drain NMOS 110: Open Drain NMOS 111: Reserved	Valid	Valid
PIN 8					
88	reg<1088>	PIN8 4X Drive (4X, NMOS Open Drain) Selection	0: 4X Drive OFF 1: 4X Drive ON (if sig_pin8_oe='1' & PIN8 Mode Control = '1X')	Valid	Valid
	reg<1089>	PIN8 Pull Up/Down Resistor Selection	0: Pull Down Resistor 1: Pull Up Resistor	Valid	Valid
	reg<1091:1090>	PIN8 Pull Up/Down Resistor Value Selection	00: Floating 01: 10 K 10: 100 K 11: 1 M	Valid	Valid
	reg<1093:1092>	PIN8 Mode Control (sig_pin8_oe=0)	00: Digital Input without Schmitt Trigger 01: Digital Input with Schmitt Trigger 10: Low Voltage Digital Input 11: Analog Input/Output	Valid	Valid
	reg<1095:1094>	PIN8 Mode Control (sig_pin8_oe=1)	00: Push Pull 1X 01: Push Pull 2X 10: Open Drain NMOS 1X 11: Open Drain NMOS 2X	Valid	Valid

Address		Signal Function	Register Bit Definition	I²C Interface	
Byte	Register Bit			Read	Write
PIN 10					
89	reg<1096>	PIN10 4X Drive (4X, NMOS Open Drain) Selection	0: 4X Drive OFF (Default) 1: 4X Drive ON (if PIN10 Mode Control = '101')	Valid	Valid
	reg<1097>	PIN10 Driver Strength Selection	0: 1X 1: 2X	Valid	Valid
	reg<1098>	PIN10 Pull Up/Down Resistor Selection	0: Pull Down Resistor 1: Pull Up Resistor	Valid	Valid
	reg<1100:1099>	PIN10 Pull Up/Down Resistor Value Selection	00: Floating 01: 10 K 10: 100 K 11: 1 M	Valid	Valid
	reg<1103:1101>	PIN10 Mode Control	000: Digital Input without Schmitt Trigger 001: Digital Input with Schmitt Trigger 010: Low Voltage Digital Input 011: Analog Input/Output 100: Push Pull 101: Open Drain NMOS 110: Open Drain PMOS 111: Analog Input & Open Drain	Valid	Valid
Reserved					
8A	reg<1104>	Reserved			
	reg<1105>	Reserved			
	reg<1107:1106>	Reserved			
	reg<1109:1108>	Reserved			
	reg<1111:1110>	Reserved			
PIN 11					
8B	reg<1112>	Reserved		Valid	Valid
	reg<1113>	PIN11 Pull Up/Down Resistor Selection	0: Pull Down Resistor 1: Pull Up Resistor	Valid	Valid
	reg<1115:1114>	PIN11 Pull Up/Down Resistor Value Selection	00: Floating 01: 10 K 10: 100 K 11: 1 M	Valid	Valid
	reg<1117:1116>	PIN11 Mode Control (sig_pin11_oe=0)	00: Digital Input without Schmitt Trigger 01: Digital Input with Schmitt Trigger 10: Low Voltage Digital Input 11: Reserved	Valid	Valid
	reg<1119:1118>	PIN11 Mode Control (sig_pin11_oe=1)	00: Push Pull 1X 01: Push Pull 2X 10: Reserved 11: Reserved	Valid	Valid
Reserved					
8C	reg<1120>	Reserved			
	reg<1121>	Reserved			
	reg<1122>	Reserved			
	reg<1124:1123>	Reserved			
	reg<1127:1125>	Reserved			

Address		Signal Function	Register Bit Definition	I²C Interface	
Byte	Register Bit			Read	Write
PIN 12					
8D	reg<1128>	Reserved		Valid	Valid
	reg<1129>	PIN12 Pull Up/Down Resistor Selection	0: Pull Down Resistor 1: Pull Up Resistor	Valid	Valid
	reg<1131:1130>	PIN12 Pull Up/Down Resistor Value Selection	00: Floating 01: 10 K 10: 100 K 11: 1 M	Valid	Valid
	reg<1133:1132>	PIN12 Mode Control (sig_pin12_oe=0)	00: Digital Input without Schmitt Trigger 01: Digital Input with Schmitt Trigger 10: Low Voltage Digital Input 11: Reserved	Valid	Valid
	reg<1135:1134>	PIN12 Mode Control (sig_pin12_oe=1)	00: Push Pull 1X 01: Push Pull 2X 10: Open Drain NMOS 1X 11: Open Drain NMOS 2X	Valid	Valid
PIN 13					
8E	reg<1136>	X1 & X2 for crystal OSC enable	0: Disable 1: Enable	Valid	Valid
	reg<1137>	PIN13 Driver Strength Selection	0: 1X 1: 2X	Valid	Valid
	reg<1138>	PIN13 Pull Up/Down Resistor Selection	0: Pull Down Resistor 1: Pull Up Resistor	Valid	Valid
	reg<1140:1139>	PIN13 Pull Up/Down Resistor Value Selection	00: Floating 01: 10 K 10: 100 K 11: 1 M	Valid	Valid
	reg<1143:1141>	PIN13 Mode Control	000: Digital Input without Schmitt Trigger 001: Digital Input with Schmitt Trigger 010: Low Voltage Digital Input 011: Sel for XOSC (X1) 100: Push Pull 101: Open Drain NMOS 110: Open Drain PMOS 111: Open Drain NMOS	Valid	Valid
Reserved					
8F	reg<1144>	Reserved			
	reg<1145>	Reserved			
	reg<1147:1146>	Reserved			
	reg<1149:1148>	Reserved			
	reg<1151:1150>	Reserved			
Reserved					
90	reg<1152>	Reserved			
	reg<1153>	Reserved			
	reg<1155:1154>	Reserved			
	reg<1157:1156>	Reserved			
	reg<1159:1158>	Reserved			

Address		Signal Function	Register Bit Definition	I²C Interface	
Byte	Register Bit			Read	Write
PIN 14					
91	reg<1160>	Reserved		Valid	Valid
	reg<1161>	PIN14 Driver Strength Selection	0: 1X 1: 2X	Valid	Valid
	reg<1162>	PIN14 Pull Up/Down Resistor Selection	0: Pull Down Resistor 1: Pull Up Resistor	Valid	Valid
	reg<1164:1163>	PIN14 Pull Up/Down Resistor Value Selection	00: Floating 01: 10 K 10: 100 K 11: 1 M	Valid	Valid
	reg<1167:1165>	PIN14 Mode Control	000: Digital Input without Schmitt Trigger 001: Digital Input with Schmitt Trigger 010: Low Voltage Digital Input 011: Reserved 100: Push Pull 101: Open Drain NMOS 110: Open Drain PMOS 111: Open Drain NMOS	Valid	Valid
ACMP1					
92	reg<1168>	ACMP1 Positive Input Source Select	0: IO8 1: ACMP0 IN+ source	Valid	Valid
	reg<1169>	ACMP1 Analog Buffer Enable (Max. BW 1MHz)	0: Disable analog buffer 1: Enable analog buffer	Valid	Valid
	reg<1171:1170>	ACMP1 Hysteresis Enable	00: 0 mV 01: 25 mV 10: 50 mV 11: 200 mV	Valid	Valid
ACMP0					
92	reg<1172>	ACMP0 Positive Input Source Select	0: IO4 1: VDD	Valid	Valid
	reg<1173>	ACMP0 Analog Buffer Enable (Max. BW 1 MHz)	0: Disable analog buffer 1: Enable analog buffer	Valid	Valid
	reg<1175:1174>	ACMP0 Hysteresis Enable	00: 0 mV 01: 25 mV 10: 50 mV 11: 200 mV	Valid	Valid
Reserved					
93	reg<1177:1176>	Reserved			
	reg<1179:1178>	Reserved			
ACMP2					
93	reg<1180>	Reserved			
	reg<1182:1181>	ACMP2 Hysteresis Enable	00: 0 mV 01: 25 mV 10: 50 mV 11: 200 mV	Valid	Valid
ACMP1 100 uA Current Source Enable					
93	reg<1183>	ACMP1 100 uA Current Source Enable	0: Disable 1: Enable	Valid	Valid

Address		Signal Function	Register Bit Definition	I²C Interface	
Byte	Register Bit			Read	Write
LUT3_x Function Select					
94	reg<1184>	LUT3_3 or DFF6 with RSTB/SETB Select	0: LUT3_3 1: DFF6 with RSTB/SETB	Valid	Valid
	reg<1185>	LUT3_2 or DFF5 with RSTB/SETB Select	0: LUT3_2 1: DFF5 with RSTB/SETB	Valid	Valid
	reg<1186>	LUT3_1 or DFF4 with RSTB/SETB Select	0: LUT3_1 1: DFF4 with RSTB/SETB	Valid	Valid
	reg<1187>	LUT3_0 or DFF3 with RSTB/SETB Select (Two consecutive DFFs if reg<1471>=1 for SM)	0: LUT3_0 1: DFF3 with RSTB/SETB	Valid	Valid
LUT2_x Function Select					
94	reg<1188>	LUT2_3 or PGEN Select	0: LUT2_3 1: PGEN	Valid	Valid
	reg<1189>	LUT2_2 or DFF2 Select	0: LUT2_2 1: DFF2	Valid	Valid
	reg<1190>	LUT2_1 or DFF1 Select	0: LUT2_1 1: DFF1	Valid	Valid
	reg<1191>	LUT2_0 or DFF0 Select	0: LUT2_0 1: DFF0	Valid	Valid
LUT4_x Function Select					
95	reg<1192>	LUT4_1 or DLY/CNT1(16bits) Select	0: LUT4_1 1: DLY/CNT1(16bits)	Valid	Valid
	reg<1193>	LUT4_0 or DLY/CNT0(16bits) Select	0: LUT4_0 1: DLY/CNT0(16bits)	Valid	Valid
LUT3_x Function Select					
95	reg<1194>	LUT3_9 or DLY/CNT6(8bits) Select	0: LUT3_9 1: DLY/CNT6(8bits)	Valid	Valid
	reg<1195>	LUT3_8 or DLY/CNT5(8bits) Select	0: LUT3_8 1: DLY/CNT5(8bits)	Valid	Valid
	reg<1196>	LUT3_7 or DLY/CNT4(8bits) Select	0: LUT3_7 1: DLY/CNT4(8bits)	Valid	Valid
	reg<1197>	LUT3_6 or DLY/CNT3(8bits) Select	0: LUT3_6 1: DLY/CNT3(8bits)	Valid	Valid
	reg<1198>	LUT3_5 or DLY/CNT2(8bits) Select	0: LUT3_5 1: DLY/CNT2(8bits)	Valid	Valid
	reg<1199>	LUT3_4 or DFF7 with RSTB/SETB Select	0: LUT3_4 1: DFF7 with RSTB/SETB	Valid	Valid
LUT2_1 / DFF1					
96	reg<1200>	LUT2_1 <0>		Valid	Valid
	reg<1201>	LUT2_1 <1> / DFF1 Initial Polarity Select	0: Low 1: High	Valid	Valid
	reg<1202>	LUT2_1 <2> / DFF1 Output Select	0: Q output 1: QB output	Valid	Valid
	reg<1203>	LUT2_1 <3> / DFF1 or Latch Select	0: DFF function 1: Latch function	Valid	Valid
LUT2_0 / DFF0					
96	reg<1204>	LUT2_0 <0>		Valid	Valid

Address		Signal Function	Register Bit Definition	I²C Interface	
Byte	Register Bit			Read	Write
96	reg<1205>	LUT2_0 <1> / DFF0 Initial Polarity Select	0: Low 1: High	Valid	Valid
	reg<1206>	LUT2_0 <2> / DFF0 Output Select	0: Q output 1: QB output	Valid	Valid
	reg<1207>	LUT2_0 <3> / DFF0 or Latch Select	0: DFF function 1: Latch function	Valid	Valid
LUT2_3 / PGEN					
97	reg<1211:1208>	LUT2_3<3:0> or PGEN 4bit counter data<3:0>		Valid	Valid
LUT2_2 / DFF2					
97	reg<1212>	LUT2_2 <0>		Valid	Valid
	reg<1213>	LUT2_2 <1> / DFF2 Initial Polarity Select	0: Low 1: High	Valid	Valid
	reg<1214>	LUT2_2 <2> / DFF2 Output Select	0: Q output 1: QB output	Valid	Valid
	reg<1215>	LUT2_2 <3> / DFF2 or Latch Select	0: DFF function 1: Latch function	Valid	Valid
LUT3_0 / DFF3					
98	reg<1219:1216>	LUT3_0 <3:0>		Valid	Valid
	reg<1220>	LUT3_0 <4> / DFF3 Initial Polarity Select	0: Low 1: High	Valid	Valid
	reg<1221>	LUT3_0 <5> / DFF3 RSTB or SETB Select	0: RSTB from Matrix Output 1: SETB from Matrix Output	Valid	Valid
	reg<1222>	LUT3_0 <6> / DFF3 Output Select	0: Q output 1: QB output	Valid	Valid
	reg<1223>	LUT3_0 <7> / DFF3 or Latch Select	0: DFF function 1: Latch function	Valid	Valid
LUT3_1 / DFF4					
99	reg<1227:1224>	LUT3_1 <3:0>		Valid	Valid
	reg<1228>	LUT3_1 <4> / DFF4 Initial Polarity Select	0: Low 1: High	Valid	Valid
	reg<1229>	LUT3_1 <5> / DFF4 RSTB or SETB Select	0: RSTB from Matrix Output 1: SETB from Matrix Output	Valid	Valid
	reg<1230>	LUT3_1 <6> / DFF4 Output Select	0: Q output 1: QB output	Valid	Valid
	reg<1231>	LUT3_1 <7> / DFF4 or Latch Select	0: DFF function 1: Latch function	Valid	Valid
LUT3_2 / DFF5					
9A	reg<1235:1232>	LUT3_2 <3:0>		Valid	Valid
	reg<1236>	LUT3_2 <4> / DFF5 Initial Polarity Select	0: Low 1: High	Valid	Valid
	reg<1237>	LUT3_2 <5> / DFF5 RSTB or SETB Select	0: RSTB from Matrix Output 1: SETB from Matrix Output	Valid	Valid
	reg<1238>	LUT3_2 <6> / DFF5 Output Select	0: Q output 1: QB output	Valid	Valid
9A	reg<1239>	LUT3_2 <7> / DFF5 or Latch Select	0: DFF function 1: Latch function	Valid	Valid

Address		Signal Function	Register Bit Definition	I²C Interface	
Byte	Register Bit			Read	Write
LUT3_3 / DFF6					
9B	reg<1243:1240>	LUT3_3 <3:0>		Valid	Valid
	reg<1244>	LUT3_3 <4> / DFF6 Initial Polarity Select	0: Low 1: High	Valid	Valid
	reg<1245>	LUT3_3 <5> / DFF6 RSTB or SETB Select	0: RSTB from Matrix Output 1: SETB from Matrix Output	Valid	Valid
	reg<1246>	LUT3_3 <6> / DFF6 Output Select	0: Q output 1: QB output	Valid	Valid
	reg<1247>	LUT3_3 <7> / DFF6 or Latch Select	0: DFF function 1: Latch function	Valid	Valid
LUT3_4 / DFF7					
9C	reg<1251:1248>	LUT3_4 <3:0>		Valid	Valid
	reg<1252>	LUT3_4 <4> / DFF7 Initial Polarity Select	0: Low 1: High	Valid	Valid
	reg<1253>	LUT3_4 <5> / DFF7 RSTB or SETB Select	0: RSTB from Matrix Output 1: SETB from Matrix Output	Valid	Valid
	reg<1254>	LUT3_4 <6> / DFF7 Output Select	0: Q output 1: QB output	Valid	Valid
	reg<1255>	LUT3_4 <7> / DFF7 or Latch Select	0: DFF function 1: Latch function	Valid	Valid
LUT3_10 / Pipe Delay					
9D	reg<1259:1256>	LUT3_10 <3:0> / Pipe Delay OUT0 Select		Valid	Valid
	reg<1263:1260>	LUT3_10 <7:4> / Pipe Delay OUT1 Select		Valid	Valid
9E	reg<1265:1264>	Select the Edge Mode of Programmable Delay & Edge Detector	00: Rising Edge Detector 01: Falling Edge Detector 10: Both Edge Detector 11: Both Edge Delay	Valid	Valid
	reg<1267:1266>	Delay Value Select for Programmable Delay & Edge Detector (VDD = 3.3 V, typical)	00: 125 ns 01: 250 ns 10: 375 ns 11: 500 ns	Valid	Valid
	reg<1269:1268>	Crystal oscillator Power down enable	00: No matrix PD 01: matrix PD for crystal oscillator 10: Reserved 11: Reserved	Valid	Valid
	reg<1270>	LUT3_10 or Pipe Delay Select	0: LUT3_10 1: Pipe Delay	Valid	Valid
	reg<1271>	Pipe Delay OUT1 Polarity Select	0: Non-inverted 1: Inverted	Valid	Valid

Address		Signal Function	Register Bit Definition	I²C Interface	
Byte	Register Bit			Read	Write
DLY/CNT2					
9F	reg<1273:1272>	DLY2 Mode Select or Asynchronous CNT2 Reset	00: On both Falling and Rising Edges (for Delay & Counter Reset) 01: on Falling Edge only (for Delay & Counter Reset) 10: on Rising Edge only (for Delay & Counter Reset) 11: No Delay on either Falling or Rising Edges / High Level Reset	Valid	Valid
	reg<1276:1274>	DLY/CNT2 Clock Source Select	000: Internal OSC clock 001: OSC/4 010: OSC/12 011: OSC/24 100: OSC/64 101: 25 MHz OSC clock 110: External Clock 111: Counter1 Overflow	Valid	Valid
	reg<1277>	DLY/CNT2 Output Selection if DLY/CNT2 Mode Selection is "11"	0: Default Output 1: Edge Detector Output	Valid	Valid
	reg<1279:1278>	DLY/CNT2 Mode Selection	00: Delay mode 01: One Shot 10: Freq. Detect 11: Counter mode	Valid	Valid
DLY/CNT3					
A0	reg<1281:1280>	DLY3 Mode Select or Asynchronous CNT3 Reset	00: On both Falling and Rising Edges (for Delay & Counter Reset) 01: on Falling Edge only (for Delay & Counter Reset) 10: on Rising Edge only (for Delay & Counter Reset) 11: No Delay on either Falling or Rising Edges / High Level Reset	Valid	Valid
	reg<1284:1282>	DLY/CNT3 Clock Source Select	000: Internal OSC clock 001: OSC/4 010: OSC/12 011: OSC/24 100: OSC/64 101: 25 MHz OSC clock 110: External Clock 111: Counter2 Overflow	Valid	Valid
	reg<1285>	DLY/CNT3 Output Selection if DLY/CNT3 Mode Selection is "11"	0: Default Output 1: Edge Detector Output	Valid	Valid
	reg<1287:1286>	DLY/CNT3 Mode Selection	00: Delay mode 01: One Shot 10: Freq. Detect 11: Counter mode	Valid	Valid

Address		Signal Function	Register Bit Definition	I²C Interface	
Byte	Register Bit			Read	Write
DLY/CNT4					
A1	reg<1289:1288>	DLY4 Mode Select or Asynchronous CNT4 Reset	00: On both Falling and Rising Edges (for Delay & Counter Reset) 01: on Falling Edge only (for Delay & Counter Reset) 10: on Rising Edge only (for Delay & Counter Reset) 11: No Delay on either Falling or Rising Edges / High Level Reset	Valid	Valid
	reg<1292:1290>	DLY/CNT4 Clock Source Select	000: Internal OSC clock 001: OSC/4 010: OSC/12 011: OSC/24 100: OSC/64 101: 25MHz OSC clock 110: External Clock 111: Counter3 Overflow	Valid	Valid
	reg<1293>	DLY/CNT4 Output Selection if DLY/CNT4 Mode Selection is "11"	0: Default Output 1: Edge Detector Output	Valid	Valid
	reg<1295:1294>	DLY/CNT4 Mode Selection	00: Delay mode 01: One Shot 10: Freq. Detect 11: Counter mode	Valid	Valid
DLY/CNT5					
A2	reg<1297:1296>	DLY5 Mode Select or Asynchronous CNT5 Reset	00: On both Falling and Rising Edges (for Delay & Counter Reset) 01: on Falling Edge only (for Delay & Counter Reset) 10: on Rising Edge only (for Delay & Counter Reset) 11: No Delay on either Falling or Rising Edges / High Level Reset	Valid	Valid
	reg<1300:1298>	DLY/CNT5 Clock Source Select	000: Internal OSC clock 001: OSC/4 010: OSC/12 011: OSC/24 100: OSC/64 101: 25MHz OSC clock 110: External Clock 111: Counter4 Overflow	Valid	Valid
	reg<1301>	DLY/CNT5 Output Selection if DLY/CNT5 Mode Selection is "11"	0: Default Output 1: Edge Detector Output	Valid	Valid
	reg<1303:1302>	DLY/CNT5 Mode Selection	00: Delay mode 01: One Shot 10: Freq. Detect 11: Counter mode	Valid	Valid

Address		Signal Function	Register Bit Definition	I²C Interface	
Byte	Register Bit			Read	Write
DLY/CNT6					
A3	reg<1305:1304>	DLY6 Mode Select or Asynchronous CNT6 Reset	00: On both Falling and Rising Edges (for Delay & Counter Reset) 01: on Falling Edge only (for Delay & Counter Reset) 10: on Rising Edge only (for Delay & Counter Reset) 11: No Delay on either Falling or Rising Edges / High Level Reset	Valid	Valid
	reg<1308:1306>	DLY/CNT6 Clock Source Select	000: Internal OSC clock 001: OSC/4 010: OSC/12, 011: OSC/24 100: OSC/64 101: 25MHz OSC clock 110: External Clock 111: Counter5 Overflow	Valid	Valid
	reg<1309>	DLY/CNT6 Output Selection if DLY/CNT6 Mode Selection is "11"	0: Default Output 1: Edge Detector Output	Valid	Valid
	reg<1311:1310>	DLY/CNT6 Mode Selection	00: Delay mode 01: One Shot 10: Freq. Detect 11: Counter mode	Valid	Valid
DLY/CNT0					
A4	reg<1313:1312>	DLY0 Mode Select or Asynchronous CNT0 Reset (16bits)	00: On both Falling and Rising Edges (for Delay & Counter Reset) 01: on Falling Edge only (for Delay & Counter Reset) 10: on Rising Edge only (for Delay & Counter Reset) 11: No Delay on either Falling or Rising Edges / High Level Reset or Set	Valid	Valid
	reg<1316:1314>	DLY/CNT0 Clock Source Select (16bits)	000: Internal OSC clock 001: OSC/4 010: OSC/12 011: OSC/24 100: OSC/64 101: 25MHz OSC clock 110: External Clock 111: Counter6 Overflow	Valid	Valid
	reg<1317>	CNT0/FSM0's Q are Set to data or Reset to 0s Selection (16bits)	0: Reset to 0s 1: Set to data (Reg<1583:1576, 1591:1584>)	Valid	Valid
	reg<1319:1318>	DLY/CNT0 Mode Selection (16bits)	00: Delay mode 01: One Shot 10: Freq. Detect 11: Counter mode	Valid	Valid

Address		Signal Function	Register Bit Definition	I²C Interface	
Byte	Register Bit			Read	Write
DLY/CNT1					
A5	reg<1321:1320>	DLY1 Mode Select or Asynchronous CNT1 Reset (16bits)	00: On both Falling and Rising Edges (for Delay & Counter Reset) 01: on Falling Edge only (for Delay & Counter Reset) 10: on Rising Edge only (for Delay & Counter Reset) 11: No Delay on either Falling or Rising Edges / High Level Reset or Set	Valid	Valid
	reg<1324:1322>	DLY/CNT1 Clock Source Select (16bits)	000: Internal OSC clock 001: OSC/4 010: OSC/12 011: OSC/24 100: OSC/64 101: 25MHz OSC clock 110: External Clock 111: Counter0 Overflow	Valid	Valid
	reg<1325>	CNT1/FSM1's Q are Set to data or Reset to 0s Selection (16bits)	0: Reset to 0s 1: Set to data (Reg<1599:1592, 1607:1600>)	Valid	Valid
	reg<1327:1326>	DLY/CNT1 Mode Selection (16bits)	00: Delay mode 01: One Shot 10: Freq. Detect 11: Counter mode	Valid	Valid
DLY/CNTx One-Shot / Freq. Detect Output Polarity					
A6	reg<1328>	Reserved		Valid	Valid
	reg<1329>	Select the Polarity of DLY/CNT6's One Shot / Freq. Detect Output	0: Default Output 1: Inverted Output	Valid	Valid
	reg<1330>	Select the Polarity of DLY/CNT5's One Shot / Freq. Detect Output	0: Default Output 1: Inverted Output	Valid	Valid
	reg<1331>	Select the Polarity of DLY/CNT4's One Shot / Freq. Detect Output	0: Default Output 1: Inverted Output	Valid	Valid
	reg<1332>	Select the Polarity of DLY/CNT3's One Shot / Freq. Detect Output	0: Default Output 1: Inverted Output	Valid	Valid
	reg<1333>	Select the Polarity of DLY/CNT2's One Shot / Freq. Detect Output	0: Default Output 1: Inverted Output	Valid	Valid
	reg<1334>	Select the Polarity of DLY/CNT1's One Shot / Freq. Detect Output	0: Default Output 1: Inverted Output	Valid	Valid
	reg<1335>	Select the Polarity of DLY/CNT0's One Shot / Freq. Detect Output	0: Default Output 1: Inverted Output	Valid	Valid
Oscillator					
A7	reg<1337:1336>	OSC Clock Pre-divider for 25 MHz	00: Div1 01: Div2 10: Div4 11: Div8	Valid	Valid
	reg<1338>	OSC Fast Start-Up Enable for 25 KHz/2 MHz	0: Disable 1: Enable	Valid	Valid
	reg<1340:1339>	OSC Clock Pre-divider for 25 KHz/2 MHz	00: Div1 01: Div2 10: Div4 11: Div8	Valid	Valid

Address		Signal Function	Register Bit Definition	I²C Interface	
Byte	Register Bit			Read	Write
A7	reg<1341>	Force 25 MHz Oscillator ON	0: Auto Power ON (If any CNT/DLY use 25MHz source) 1: Force Power ON	Valid	Valid
	reg<1342>	Oscillator (25 KHz: Ring OSC, 2M: RC-OSC) Select	0: 25 KHz Ring OSC 1: 2 MHz RC-OSC	Valid	Valid
	reg<1343>	Force 25 KHz/2MHz Oscillator ON	0: Auto Power ON (if any CNT/DLY use 25K/2MHz source) 1: Force Power ON	Valid	Valid
A8	reg<1346:1344>	Internal OSC 25 KHz/2 MHz Frequency Divider Control for matrix input <28>	000: OSC/1 001: OSC/2 010: OSC/3 011: OSC/4 100: OSC/8 101: OSC/12 110: OSC/24 111: OSC/64	Valid	Valid
	reg<1349:1347>	Internal OSC 25 KHz/2 MHz Frequency Divider Control for matrix input <27>	000: OSC/1 001: OSC/2 010: OSC/3 011: OSC/4 100: OSC/8 101: OSC/12 110: OSC/24 111: OSC/64	Valid	Valid
	reg<1350>	OSC Clock 25 KHz/2 MHz to matrix input <28> enable	0: Disable 1: Enable	Valid	Valid
	reg<1351>	OSC Clock 25 KHz/2 MHz to matrix input <27> enable	0: Disable 1: Enable	Valid	Valid
A9	reg<1354:1352>	ASM_reg_init<2:0> for ASM state default setup bits		Valid	Valid
	reg<1355>	Reserved	Reserved	Valid	Valid
	reg<1356>	OSC Clock 25 MHz to matrix input <29> enable	0: Disable 1: Enable	Valid	Valid
	reg<1357>	External Clock Source Select instead of 25 MHz	0: Internal Oscillator 1: External Clock from Pin13	Valid	Valid
	reg<1358>	External Clock Source Select instead of 25 KHz/2 MHz	0: Internal Oscillator 1: External Clock from Pin14	Valid	Valid
	reg<1359>	Reserved		Valid	Valid
ASM 8-to-1 MUX's 3 selection bits					
AA	reg<1362:1360>	ASM_state0_dec8x1_EN1		Valid	Valid
	reg<1363>	Reserved		Valid	Valid
	reg<1366:1364>	ASM_state0_dec8x1_EN0		Valid	Valid
	reg<1367>	Reserved		Valid	Valid
AB	reg<1370:1368>	ASM_state1_dec8x1_EN0		Valid	Valid
	reg<1371>	Reserved		Valid	Valid
	reg<1374:1372>	ASM_state0_dec8x1_EN2		Valid	Valid
	reg<1375>	Reserved		Valid	Valid
AC	reg<1378:1376>	ASM_state1_dec8x1_EN2		Valid	Valid
	reg<1379>	Reserved		Valid	Valid

Address		Signal Function	Register Bit Definition	I²C Interface	
Byte	Register Bit			Read	Write
AC	reg<1382:1380>	ASM_state1_dec8x1_EN1		Valid	Valid
	reg<1383>	Reserved		Valid	Valid
AD	reg<1386:1384>	ASM_state2_dec8x1_EN1		Valid	Valid
	reg<1387>	Reserved		Valid	Valid
	reg<1390:1388>	ASM_state2_dec8x1_EN0		Valid	Valid
	reg<1391>	Reserved		Valid	Valid
AE	reg<1394:1392>	ASM_state3_dec8x1_EN0		Valid	Valid
	reg<1395>	Reserved		Valid	Valid
	reg<1398:1396>	ASM_state2_dec8x1_EN2		Valid	Valid
	reg<1399>	Reserved		Valid	Valid
AF	reg<1402:1400>	ASM_state3_dec8x1_EN2		Valid	Valid
	reg<1403>	Reserved		Valid	Valid
	reg<1406:1404>	ASM_state3_dec8x1_EN1		Valid	Valid
	reg<1407>	Reserved		Valid	Valid
B0	reg<1410:1408>	ASM_state4_dec8x1_EN1		Valid	Valid
	reg<1411>	Reserved		Valid	Valid
	reg<1414:1412>	ASM_state4_dec8x1_EN0		Valid	Valid
	reg<1415>	Reserved		Valid	Valid
B1	reg<1418:1416>	ASM_state5_dec8x1_EN0		Valid	Valid
	reg<1419>	Reserved		Valid	Valid
	reg<1422:1420>	ASM_state4_dec8x1_EN2		Valid	Valid
	reg<1423>	Reserved		Valid	Valid
B2	reg<1426:1424>	ASM_state5_dec8x1_EN2		Valid	Valid
	reg<1427>	Reserved		Valid	Valid
	reg<1430:1428>	ASM_state5_dec8x1_EN1		Valid	Valid
	reg<1431>	Reserved		Valid	Valid
B3	reg<1434:1432>	ASM_state6_dec8x1_EN1		Valid	Valid
	reg<1435>	Reserved		Valid	Valid
	reg<1438:1436>	ASM_state6_dec8x1_EN0		Valid	Valid
	reg<1439>	Reserved		Valid	Valid
B4	reg<1442:1440>	ASM_state7_dec8x1_EN0		Valid	Valid
	reg<1443>	Reserved		Valid	Valid
	reg<1446:1444>	ASM_state6_dec8x1_EN2		Valid	Valid
	reg<1447>	Reserved		Valid	Valid
B5	reg<1450:1448>	ASM_state7_dec8x1_EN2		Valid	Valid
	reg<1451>	Reserved		Valid	Valid
	reg<1454:1452>	ASM_state7_dec8x1_EN1		Valid	Valid
	reg<1455>	Reserved		Valid	Valid

Address		Signal Function	Register Bit Definition	I²C Interface	
Byte	Register Bit			Read	Write
Filter / Edge Detector					
B6	reg<1457:1456>	Select the edge mode of Edge Detector_1	00: Rising Edge 01: Falling Edge 10: Both Edge 11: Delay	Valid	Valid
	reg<1458>	Filter_1/Edge Detector_1 output Polarity Select	0: Filter_1 output 1: Filter_1 output inverted	Valid	Valid
	reg<1459>	Filter_1or Edge Detector_1 Select (Typ. 30 ns @VDD=3.3 V)	0: Filter_1 1: Edge Detector_1	Valid	Valid
	reg<1461:1460>	Select the edge mode of Edge Detector_0	00: Rising Edge 01: Falling Edge 10: Both Edge 11: Delay	Valid	Valid
	reg<1462>	Filter_0/Edge Detector_0 output Polarity Select	0: Filter_0 output 1: Filter_0 output inverted	Valid	Valid
	reg<1463>	Filter_0 or Edge Detector_0 Select (Typ. 47 ns @VDD=3.3 V)	0: Filter_0 1: Edge Detector_0	Valid	Valid
VREF / Bandgap					
B7	reg<1465:1464>	Reserved		Valid	Valid
	reg<1466>	Bandgap OK for ACMP Output Delay Time Select, the start Time is "resetb_core go to High"	0: 500 uS 1: 50 uS	Valid	Valid
	reg<1467>	Reserved		Valid	Valid
	reg<1468>	Reserved		Valid	Valid
	reg<1469>	Reserved		Valid	Valid
	reg<1470>	Reserved		Valid	Valid
	reg<1471>	Two consecutive DFFs enable for SM	0: Disable 1: Enable	Valid	Valid
B8	reg<1474:1472>	Power divider (VDD/3, VDD/4) ON/OFF	0XX: Power divider off (if there is no use of VDD/3, VDD/4 @ ACMP negative in) 100: Reservedb X10: Reserved XX1:Reserved	Valid	Valid
	reg<1475>	VDD Bypass Enable when device power is 1.8 V	0: Regulator Auto ON 1: Regulator OFF (VDD Bypass)	Valid	Valid
	reg<1476>	Force Bandgap ON	0: Auto-Mode 1: Enable (if chip is Power Down, the Bandgap will Power Down even if it is Set to 1).	Valid	Valid
	reg<1477>	NVM Power Down	0: None (Or Programming Enable) 1: Power Down (Or Programming Disable)	Valid	Valid
	reg<1478>	Reserved		Valid	Valid
	reg<1479>	GPIO Quick Charge Enable	0: Disable 1: Enable	Valid	Valid
B9	reg<1482:1480>	Reserved		Valid	Valid
	reg<1483>	Reserved		Valid	Valid
	reg<1486:1484>	Reserved		Valid	Valid
	reg<1487>	Reserved		Valid	Valid

Address		Signal Function	Register Bit Definition	I²C Interface	
Byte	Register Bit			Read	Write
BA	reg<1488>	Reserved		Valid	Valid
	reg<1489>	Wake time Selection in Wake Sleep Mode	0: short wake time 1: normal wake time	Valid	Valid
	reg<1490>	ACMP0 Wake & Sleep function Enable	0: Disable 1: Enable	Valid	Valid
	reg<1491>	ACMP1 Wake & Sleep function Enable	0: Disable 1: Enable	Valid	Valid
	reg<1492>	ACMP2 Wake & Sleep function Enable	0: Disable 1: Enable	Valid	Valid
	reg<1493>	Reserved		Valid	Valid
	reg<1494>	Wake Sleep Output State When WS Oscillator is Power Down if DLY/CNT0 Mode Selection is "11"	0: Low 1: High	Valid	Valid
	reg<1495>	Wake Sleep Ratio Control Mode Selection if DLY/CNT0 Mode Selection is "11"	0: Default Mode 1: Wake Sleep Ratio Control Mode	Valid	Valid
BB	reg<1503:1496>	Reserved		Valid	Valid
BC	reg<1511:1504>	Reserved		Valid	Valid
BD	reg<1519:1512>	Reserved		Valid	Valid
BE	reg<1527:1520>	Reserved		Valid	Valid
BF	reg<1535:1528>	Reserved		Valid	Valid
LUT / DLY/CNT Control Data					
C0	reg<1543:1536>	LUT3_5 <7:0> or DLY/CNT2 Control Data	1 - 255 (Delay Time = [Counter Control Data + 1] / Freq)	Valid	Valid
C1	reg<1551:1544>	LUT3_6 <7:0> or DLY/CNT3 Control Data	1 - 255 (Delay Time = [Counter Control Data + 1] / Freq)	Valid	Valid
C2	reg<1559:1552>	LUT3_7 <7:0> or DLY/CNT4 Control Data	1 - 255 (Delay Time = [Counter Control Data + 1] / Freq)	Valid	Valid
C3	reg<1567:1560>	LUT3_8 <7:0> or DLY/CNT5 Control Data	1 - 255 (Delay Time = [Counter Control Data + 1] / Freq)	Valid	Valid
C4	reg<1575:1568>	LUT3_9 <7:0> or DLY/CNT6 Control Data	1 - 255 (Delay Time = [Counter Control Data + 1] / Freq)	Valid	Valid
C5	reg<1583:1576>	LUT4_0 <15:0> or DLY/CNT0 (16bits, <15:0> = <1591:1576>) Control Data	1 - 16535 (Delay Time = [Counter Control Data + 2] / Freq)	Valid	Valid
C6	reg<1591:1584>			Valid	Valid
C7	reg<1599:1592>	LUT4_1 <15:0> or DLY/CNT1 (16bits, <15:0> = <1607:1592>) Control Data	1 - 65535 (Delay Time = [Counter Control Data + 2] / Freq)	Valid	Valid
C8	reg<1607:1600>			Valid	Valid
C9	reg<1615:1608>	PGEN pattern data <15:0> = <1623:1608>		Valid	Valid
CA	reg<1623:1616>			Valid	Valid

Address		Signal Function	Register Bit Definition	I²C Interface	
Byte	Register Bit			Read	Write
ACMP0					
CB	reg<1628:1624>	ACMP0-IN Voltage Select	00000: 50 mV 00001: 100 mV 00010: 150 mV 00011: 200 mV 00100: 250 mV 00101: 300 mV 00110: 350 mV 00111: 400 mV 01000: 450 mV 01001: 500 mV 01010: 550 mV 01011: 600 mV 01100: 650 mV 01101: 700 mV 01110: 750 mV 01111: 800 mV 10000: 850 mV 10001: 900 mV 10010: 950 mV 10011: 1 V 10100: 1.05 V 10101: 1.1 V 10110: 1.15 V 10111: 1.2 V 11000: VDD/3 11001: VDD/4 11010: PIN10: EXT_VREF 11011: PIN5: ACMP0- 11100: PIN10: EXT_VREF/2 11101: PIN5: ACMP0-/2	Valid	Valid
	reg<1630:1629>	ACMP0 Positive Input Divider	00: 1.0X 01: 0.5X 10: 0.33X 11: 0.25X	Valid	Valid
	reg<1631>	ACMP0 Low Bandwidth (MAX: 1MHz) Enable	0: OFF 1:ON	Valid	Valid
ACMP1					
CC	reg<1636:1632>	ACMP1-IN Voltage Select	00000: 50 mV 00001: 100 mV 00010: 150 mV 00011: 200 mV 00100: 250 mV 00101: 300 mV 00110: 350 mV 00111: 400 mV 01000: 450 mV 01001: 500 mV 01010: 550 mV 01011: 600 mV 01100: 650 mV 01101: 700 mV 01110: 750 mV 01111: 800 mV 10000: 850 mV 10001: 900 mV 10010: 950 mV 10011: 1 V 10100: 1.05 V 10101: 1.1 V 10110: 1.15 V 10111: 1.2 V 11000: VDD/3 11001: VDD/4 11010: PIN10: EXT_VREF 11011: PIN10: EXT_VREF 11100: PIN10: EXT_VREF/2 11101: PIN10: EXT_VREF/2	Valid	Valid
	reg<1638:1637>	ACMP1 Positive Input Divider	00: 1.0X 01: 0.5X 10: 0.33X 11: 0.25X	Valid	Valid
	reg<1639>	ACMP1 Low Bandwidth (MAX: 1MHz) Enable	0: OFF 1: ON	Valid	Valid

Address		Signal Function	Register Bit Definition	I²C Interface	
Byte	Register Bit			Read	Write
ACMP2					
CD	reg<1644:1640>	ACMP2-IN Voltage Select	00000: 50 mV 00001: 100 mV 00010: 150 mV 00011: 200 mV 00100: 250 mV 00101: 300 mV 00110: 350 mV 00111: 400 mV 01000: 450 mV 01001: 500 mV 01010: 550 mV 01011: 600 mV 01100: 650 mV 01101: 700 mV 01110: 750 mV 01111: 800 mV 10000: 850 mV 10001: 900 mV 10010: 950 mV 10011: 1 V 10100: 1.05 V 10101: 1.1 V 10110: 1.15 V 10111: 1.2 V 11000: VDD/3 11001: VDD/4 11010: PIN10: EXT_VREF 11011: Reserved 11100: PIN10: EXT_VREF/2 11101: Reserved	Valid	Valid
	reg<1646:1645>	ACMP2 Positive Input Divider	00: 1.0X 01: 0.5X 10: 0.33X 11: 0.25X	Valid	Valid
	reg<1647>	ACMP2 Low Bandwidth (MAX: 1MHz) Enable	0: OFF 1: ON	Valid	Valid
Reserved					
CE	reg<1652:1648>	Reserved			
	reg<1654:1653>	Reserved			
	reg<1655>	Reserved			
Misc.					
CF	reg<1656>	Reserved		Valid	Valid
	reg<1657>	Switch from “Matrix OUT: OSC 25MHz PD” to “Matrix OUT: OSC 25MHz Force On”	0: OSC PD 1: OSC Force On (Matrix Output <59>)	Valid	Valid
	reg<1658>	Switch from “Matrix OUT: OSC 25KHz/2MHz PD” to “Matrix OUT: OSC 25KHz/2MHz Force On”	0: OSC PD 1: OSC Force On (Matrix Output <58>)	Valid	Valid
	reg<1659>	Reserved		Valid	Valid
CF	reg<1660>	Reserved		Valid	Valid
	reg<1661>	Reserved		Valid	Valid
	reg<1662>	I²C reset bit with reloading NVM into Data register	0: Keep existing condition 1: Reset execution	Valid	Valid
	reg<1663>	IO Latching Enable During I²C Write Interface	0: Disable 1: Enable	Valid	Valid
D0	reg<1671:1664>	RAM 8 outputs for ASM-state0		Valid	Valid
D1	reg<1679:1672>	RAM 8 outputs for ASM-state1		Valid	Valid
D2	reg<1687:1680>	RAM 8 outputs for ASM-state2		Valid	Valid
D3	reg<1695:1688>	RAM 8 outputs for ASM-state3		Valid	Valid
D4	reg<1703:1696>	RAM 8 outputs for ASM-state4		Valid	Valid
D5	reg<1711:1704>	RAM 8 outputs for ASM-state5		Valid	Valid
D6	reg<1719:1712>	RAM 8 outputs for ASM-state6		Valid	Valid

Address		Signal Function	Register Bit Definition	I²C Interface	
Byte	Register Bit			Read	Write
D7	reg<1727:1720>	RAM 8 outputs for ASM-state7		Valid	Valid
D8	reg<1735:1728>	User configurable RAM / OTP Byte 0		Valid	Valid
D9	reg<1743:1736>	User configurable RAM / OTP Byte 1		Valid	Valid
DA	reg<1751:1744>	User configurable RAM / OTP Byte 2		Valid	Valid
DB	reg<1759:1752>	User configurable RAM / OTP Byte 3		Valid	Valid
DC	reg<1767:1760>	User configurable RAM / OTP Byte 4		Valid	Valid
DD	reg<1775:1768>	User configurable RAM / OTP Byte 5		Valid	Valid
DE	reg<1783:1776>	User configurable RAM / OTP Byte 6		Valid	Valid
DF	reg<1791:1784>	User configurable RAM / OTP Byte 7		Valid	Valid
E0	reg<1799:1792>	Reserved		Invalid	Invalid
E1	reg<1807:1800>	Reserved		Invalid	Invalid
E2	reg<1815:1808>	Reserved		Invalid	Invalid
E3	reg<1823:1816>	Reserved		Invalid	Invalid
E4	reg<1831:1824>	Reserved		Valid	Valid
E5	reg<1832>	I²C lock for read bits <1535:0> (Bank 0/1/2)	0: Disable (Programmed data can be read.), 1: Enable (Programmed data can't be read.)	Valid	Invalid
	reg<1833>	Reserved		Valid	Invalid
	reg<1835:1834>	Reserved		Valid	Invalid
	reg<1839:1836>	Reserved		Valid	Invalid
E6	reg<1847:1840>	16-bit Pattern ID Byte 0 (From NVM): ID[23:16]		Valid	Valid
E7	reg<1855:1848>	Reserved		Valid	Invalid
E8	reg<1863:1856>	Reserved		Valid	Invalid
E9	reg<1867:1864>	I²C Control Code Bit [3:0]	Value for slave address	Valid	Invalid
	reg<1868>	Reserved		Valid	Valid
	reg<1869>	Reserved		Valid	Valid
	reg<1870>	I²C lock for write all bits (Bank 0/1/2/3)	0: writable 1: Non-writable	Valid	Valid
	reg<1871>	I²C lock for write bits <1535:0> (Bank 0/1/2)	0: writable 1: Non-writable	Valid	Invalid
EA	reg<1879:1872>	CNT4 Counted Value		Valid	Invalid
EB	reg<1887:1880>	CNT0 (16bits) = <1895:1880> Counted Value		Valid	Invalid
EC	reg<1895:1888>			Valid	Invalid
ED	reg<1903:1896>	CNT6 Counted Value		Valid	Invalid
EE	reg<1911:1904>	CNT1 (16bits) = <1919:1904> Counted Value		Valid	Invalid
EF	reg<1919:1912>			Valid	Invalid

Address		Signal Function	Register Bit Definition	I²C Interface	
Byte	Register Bit			Read	Write
Matrix Input					
F0	reg<1920>	Matrix Input 0	GND	Valid	Invalid
	reg<1921>	Matrix Input 1	Pin2 Digital Input	Valid	Invalid
	reg<1922>	Matrix Input 2	GND	Valid	Invalid
	reg<1923>	Matrix Input 3	Pin3 Digital Input	Valid	Invalid
	reg<1924>	Matrix Input 4	GND	Valid	Invalid
	reg<1925>	Matrix Input 5	Pin4 Digital Input	Valid	Invalid
	reg<1926>	Matrix Input 6	Pin5 Digital Input	Valid	Invalid
	reg<1927>	Matrix Input 7	PIN8 Digital Input	Valid	Invalid
F1	reg<1928>	Matrix Input 8	LUT2_0 / DFF0 Output	Valid	Invalid
	reg<1929>	Matrix Input 9	LUT2_1 / DFF1 Output	Valid	Invalid
	reg<1930>	Matrix Input 10	LUT2_2 / DFF2 Output	Valid	Invalid
	reg<1931>	Matrix Input 11	LUT2_3 / PGEN Output	Valid	Invalid
	reg<1932>	Matrix Input 12	LUT3_0 / DFF3 Output	Valid	Invalid
	reg<1933>	Matrix Input 13	LUT3_1 / DFF4 Output	Valid	Invalid
	reg<1934>	Matrix Input 14	LUT3_2 / DFF5 Output	Valid	Invalid
	reg<1935>	Matrix Input 15	LUT3_3 / DFF6 Output	Valid	Invalid
F2	reg<1936>	Matrix Input 16	LUT3_4 / DFF7 Output	Valid	Invalid
	reg<1937>	Matrix Input 17	LUT3_5 / CNT_DLY2(8bit) Output	Valid	Invalid
	reg<1938>	Matrix Input 18	LUT3_6 / CNT_DLY3(8bit) Output	Valid	Invalid
	reg<1939>	Matrix Input 19	LUT3_7 / CNT_DLY4(8bit) Output	Valid	Invalid
	reg<1940>	Matrix Input 20	LUT3_8 / CNT_DLY5(8bit) Output	Valid	Invalid
	reg<1941>	Matrix Input 21	LUT3_9 / CNT_DLY6(8bit) Output	Valid	Invalid
	reg<1942>	Matrix Input 22	LUT4_0 / CNT_DLY0(16bit) Output	Valid	Invalid
	reg<1943>	Matrix Input 23	LUT4_1 / CNT_DLY1(16bit) Output	Valid	Invalid
F3	reg<1944>	Matrix Input 24	LUT3_10 / Pipe Delay (1st stage) Output	Valid	Invalid
	reg<1945>	Matrix Input 25	Pipe Delay Output0	Valid	Invalid
	reg<1946>	Matrix Input 26	Pipe Delay Output1	Valid	Invalid
	reg<1947>	Matrix Input 27	Fixed "L" output because it is OSC clock.	Valid	Invalid
	reg<1948>	Matrix Input 28	Fixed "L" output because it is OSC clock.	Valid	Invalid
	reg<1949>	Matrix Input 29	Fixed "L" output because it is OSC clock.	Valid	Invalid
	reg<1950>	Matrix Input 30	Filter0 / Edge Detect0 Output	Valid	Invalid
	reg<1951>	Matrix Input 31	Filter1 / Edge Detect1 Output	Valid	Invalid
F4	reg<1952>	Matrix Input 32	Virtual Input <0>	Valid	Valid
	reg<1953>	Matrix Input 33	Virtual Input <1>	Valid	Valid
	reg<1954>	Matrix Input 34	Virtual Input <2>	Valid	Valid
F4	reg<1955>	Matrix Input 35	Virtual Input <3>	Valid	Valid
	reg<1956>	Matrix Input 36	Virtual Input <4>	Valid	Valid
	reg<1957>	Matrix Input 37	Virtual Input <5>	Valid	Valid
	reg<1958>	Matrix Input 38	Virtual Input <6>	Valid	Valid
	reg<1959>	Matrix Input 39	Virtual Input <7>	Valid	Valid

Address		Signal Function	Register Bit Definition	I²C Interface	
Byte	Register Bit			Read	Write
F5	reg<1960>	Matrix Input 40	RAM_0 Output for ASM-state	Valid	Invalid
	reg<1961>	Matrix Input 41	RAM_1 Output for ASM-state	Valid	Invalid
	reg<1962>	Matrix Input 42	RAM_2 Output for ASM-state	Valid	Invalid
	reg<1963>	Matrix Input 43	RAM_3 Output for ASM-state	Valid	Invalid
	reg<1964>	Matrix Input 44	RAM_4 Output for ASM-state	Valid	Invalid
	reg<1965>	Matrix Input 45	RAM_5 Output for ASM-state	Valid	Invalid
	reg<1966>	Matrix Input 46	RAM_6 Output for ASM-state	Valid	Invalid
	reg<1967>	Matrix Input 47	RAM_7 Output for ASM-state	Valid	Invalid
F6	reg<1968>	Matrix Input 48	Pin10 Digital Input	Valid	Invalid
	reg<1969>	Matrix Input 49	GND	Valid	Invalid
	reg<1970>	Matrix Input 50	Pin11 Digital Input	Valid	Invalid
	reg<1971>	Matrix Input 51	GND	Valid	Invalid
	reg<1972>	Matrix Input 52	Pin12 Digital Input	Valid	Invalid
	reg<1973>	Matrix Input 53	Pin13 Digital Input	Valid	Invalid
	reg<1974>	Matrix Input 54	GND	Valid	Invalid
	reg<1975>	Matrix Input 55	GND	Valid	Invalid
F7	reg<1976>	Matrix Input 56	Pin14 Digital Input	Valid	Invalid
	reg<1977>	Matrix Input 57	ACMP_0 Output	Valid	Invalid
	reg<1978>	Matrix Input 58	ACMP_1 Output	Valid	Invalid
	reg<1979>	Matrix Input 59	ACMP_2 Output	Valid	Invalid
	reg<1980>	Reserved		Valid	Invalid
	reg<1981>	Matrix Input 61	Programmable Delay with Edge Detector Output	Valid	Invalid
	reg<1982>	Matrix Input 62	Resetb_core	Valid	Invalid
	reg<1983>	Matrix Input 63	VDD	Valid	Invalid
Reserved					
F8	reg<1991:1984>	Reserved		Valid	Invalid
F9	reg<1999:1992>	Reserved		Valid	Invalid
FA	reg<2007:2000>	Reserved		Valid	Invalid
FB	reg<2015:2008>	Reserved		Valid	Valid
FC	reg<2023:2016>	Reserved		Valid	Invalid
FD	reg<2031:2024>	Reserved		Valid	Invalid
FE	reg<2039:2032>	Reserved		Valid	Valid
FF	reg<2047:2040>	Reserved		Valid	Valid

22.0 Package Top Marking System Definition

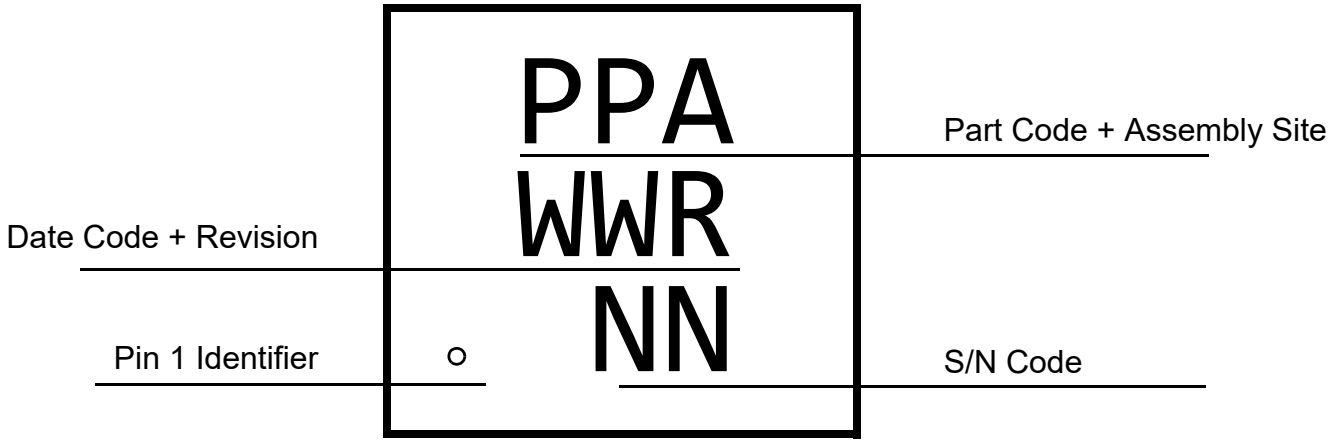

23.0 Package Drawing and Dimensions

STQFN 14L 2 x 2.2mm 0.4P COL Package
JEDEC MO-220, Variation WECE

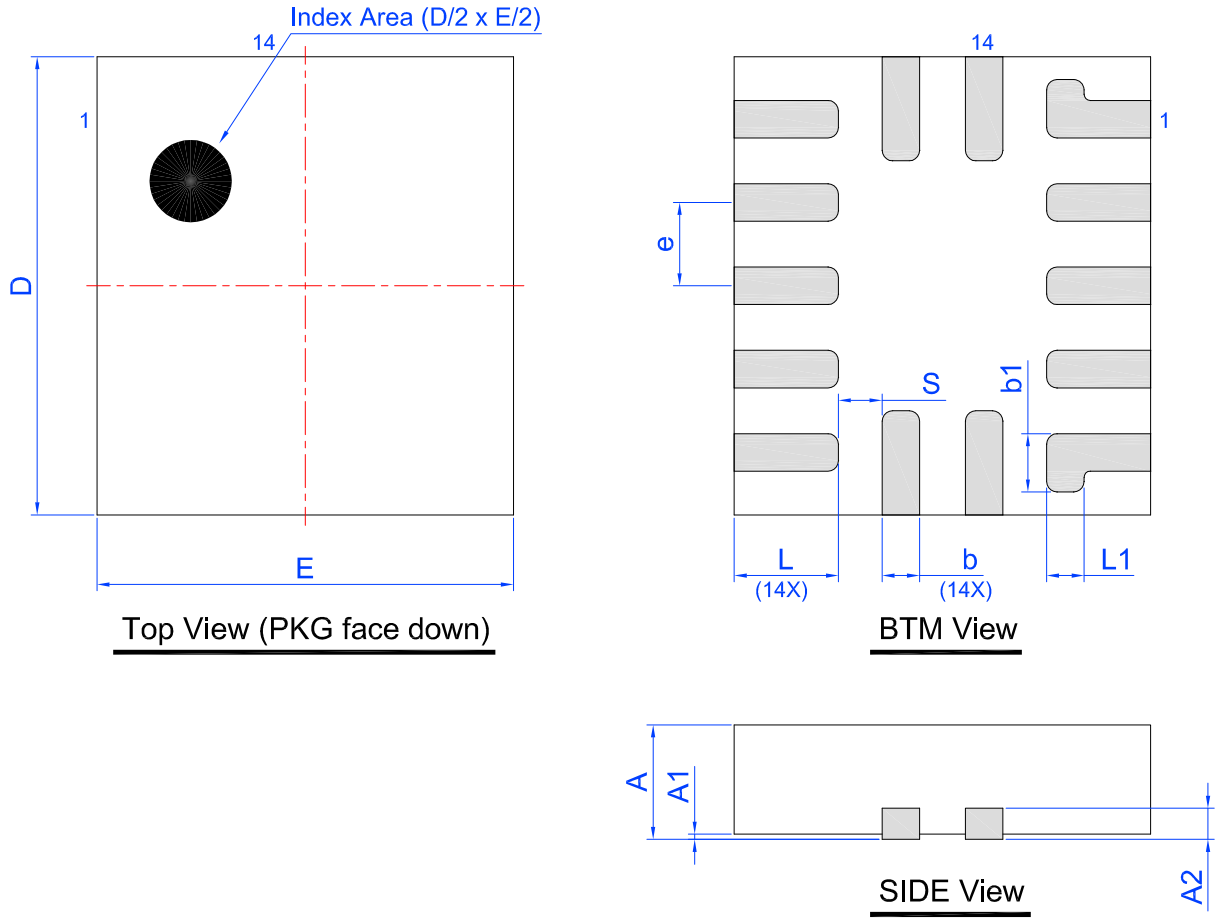

Unit: mm

Symbol	Min	Nom.	Max	Symbol	Min	Nom.	Max
A	0.50	0.55	0.60	D	2.15	2.20	2.25
A1	0.005	-	0.050	E	1.95	2.00	2.05
A2	0.10	0.15	0.20	L	0.45	0.50	0.55
b	0.13	0.18	0.23	S	0.21 TYP		
e	0.40 BSC			b1	0.28 TYP		
				L1	0.18 TYP		

24.0 Tape and Reel Specifications

Package Type	# of Pins	Nominal Package Size [mm]	Max Units		Reel & Hub Size [mm]	Leader (min)		Trailer (min)		Tape Width [mm]	Part Pitch [mm]
			per Reel	per Box		Pockets	Length [mm]	Pockets	Length [mm]		
STQFN 14L 2x2.2 mm 0.4P COL	14	2 x 2.2 x 0.55	3,000	3,000	178 / 60	100	400	100	400	8	4

24.1 Carrier Tape Drawing and Dimensions

Package Type	Pocket BTM Length	Pocket BTM Width	Pocket Depth	Index Hole Pitch	Pocket Pitch	Index Hole Diameter	Index Hole to Tape Edge	Index Hole to Pocket Center	Tape Width
	A0	B0	K0	P0	P1	D0	E	F	W
STQFN 14L 2x2.2 mm 0.4P COL	2.2	2.35	0.8	4	4	1.5	1.75	3.5	8

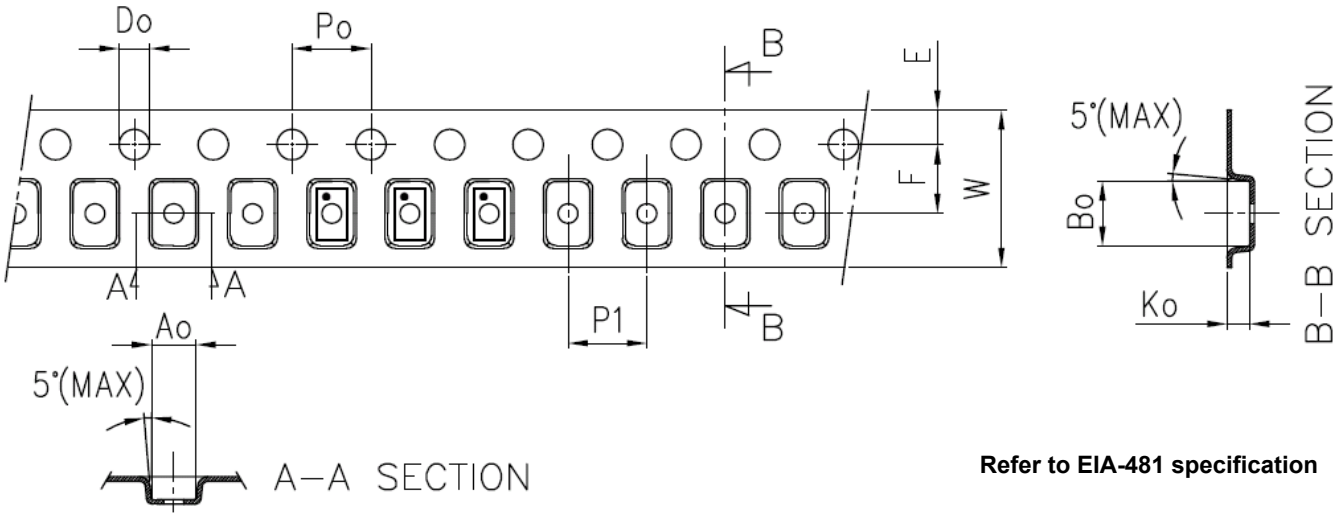

Refer to EIA-481 specification

25.0 Recommended Landing Pattern

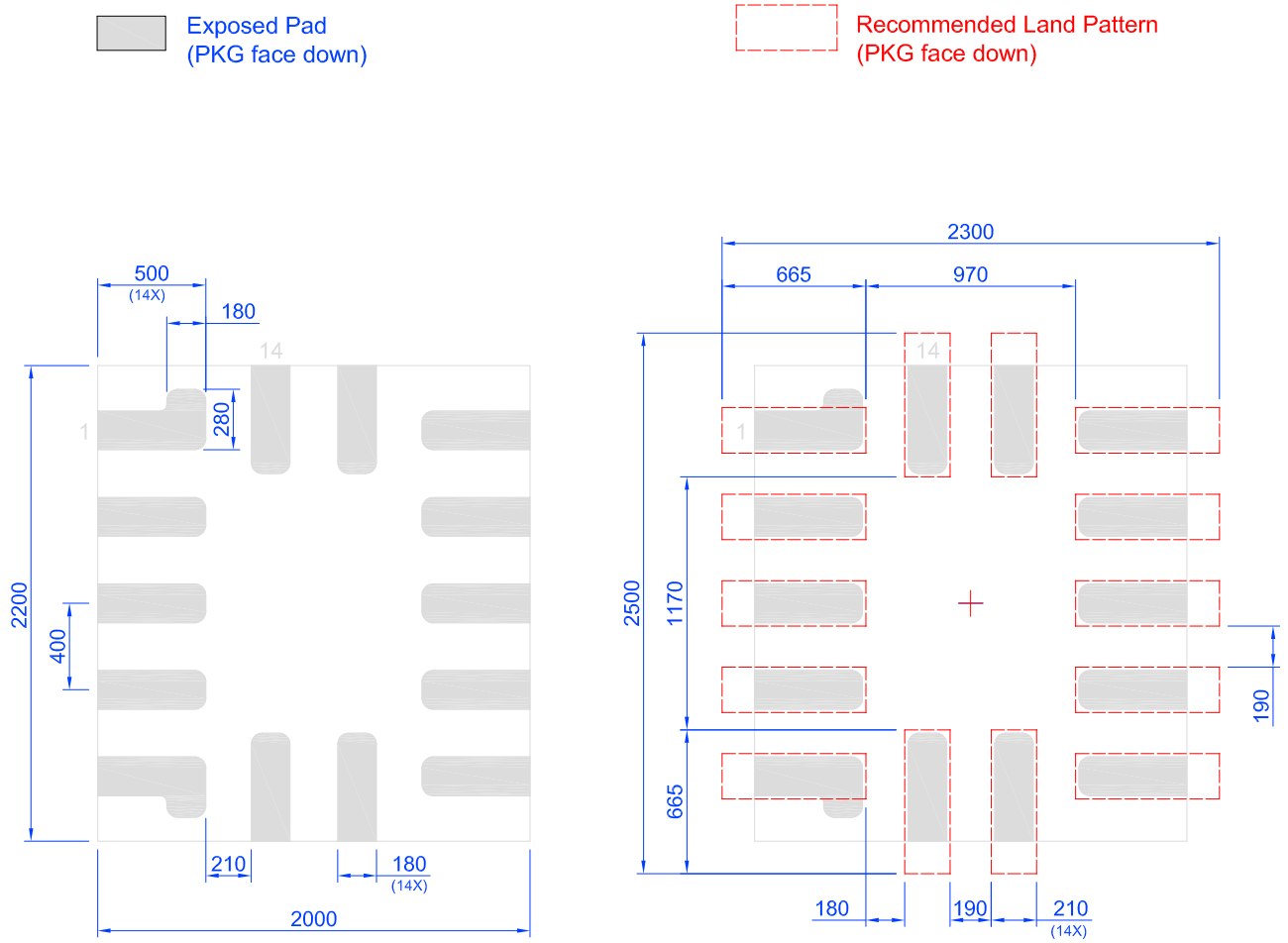

Unit:um

26.0 Recommended Reflow Soldering Profile

Please see IPC/JEDEC J-STD-020: latest revision for reflow profile based on package volume of 2.42 mm^3 (nominal). More information can be found at www.jedec.org.

27.0 Revision History

Date	Version	Change
10/12/2017	1.07	Updated Electrical Spec Fixed typos Updated I2C Specifications Updated subsection I2C Serial Reset Command Updated I2C Serial Command Register Protection Added Register Read/Write Protection subsection
5/24/2017	1.06	Fixed typos Updated reg<1831:1824> Updated Electrical Characteristics
5/5/2017	1.05	Updated Absolute Maximum Conditions Corrected table Typical Delay Estimated for Each Block at T=25°C
4/21/2017	1.04	Fixed typos Updated POR section
3/31/2017	1.03	Fixed quality of CNT Timing Diagrams Updated Section Programmable Delay / Edge Detector Fixed typos
12/20/2016	1.02	Corrected Oscillator Electrical Spec Updated Silego Website & Support Fixed typos Corrected figure WS controller Added table DLY/CNTx One-Shot / Freq. Detect Output Polarity Added data to table Programmable Delay Register Settings Updated figure Deglitch Filter / Edge Detector
11/16/2016	1.01	Fixed typos Corrected figure OSC1 Power On Delay Corrected table Typical Counter/Delay Offset Measurements Added subsection Difference in Counter Value for Counter, Delay, One-Shot and Frequency Detect Modes
10/21/2016	1.00	Production Release

Silego Website & Support

Silego Technology Website

Silego Technology provides online support via our website at http://www.silego.com/.This website is used as a means to make files and information easily available to customers.

For more information regarding Silego Green products, please visit our website.

Our Green product lines feature:

GreenPAK: Programmable Mixed Signal Matrix products
GreenFET1 / GreenFET3 / HFET1: MOSFET Drivers and ultra-small, low RDSon Load Switches
GreenCLK1 / GreenCLK2 / GreenCLK3: Crystal replacement technology

Products are also available for purchase directly from Silego at the Silego Online Store at http://www.silego.com/buy/.

Silego Technical Support

Datasheets and errata, application notes and example designs, user guides, and hardware support documents and the latest software releases are available at the Silego website or can be requested directly at info@silego.com.

For specific GreenPAK design or applications questions and support please send e-mail requests to GreenPAK@silego.com

Users of Silego products can receive assistance through several channels:

Contact Your Local Sales Representative

Customers can contact their local sales representative or field application engineer (FAE) for support. Local sales offices are also available to help customers. More information regarding your local representative is available at the Silego website or send a request to info@silego.com

Contact Silego Directly

Silego can be contacted directly via e-mail at info@silego.com or user submission form, located at the following URL:

http://support.silego.com/

Other Information

The latest Silego Technology press releases, listing of seminars and events, listings of world wide Silego Technology offices and representatives are all available at http://www.silego.com/

THIS PRODUCT HAS BEEN DESIGNED AND QUALIFIED FOR THE CONSUMER MARKET. APPLICATIONS OR USES AS CRITICAL COMPONENTS IN LIFE SUPPORT DEVICES OR SYSTEMS ARE NOT AUTHORIZED. SILEGO TECHNOLOGY DOES NOT ASSUME ANY LIABILITY ARISING OUT OF SUCH APPLICATIONS OR USES OF ITS PRODUCTS. SILEGO TECHNOLOGY RESERVES THE RIGHT TO IMPROVE PRODUCT DESIGN, FUNCTIONS AND RELIABILITY WITHOUT NOTICE.