Honeywell

GLOBAL SAFETY SWITCH

CATALOGUE LISTING CHART NO.

MTG-GS-251

DO NOT SCALE PRINT

MTG-GS-251 (M) GS SERIES CHART 1 REPLACES

DRAWING NUMBER CO/542

ISSUE 3

RELEASE NUMBER

REVISIONS

2	CO*703	IW 11/98
3	CO*1315	IW 2/00

FIGURE 1

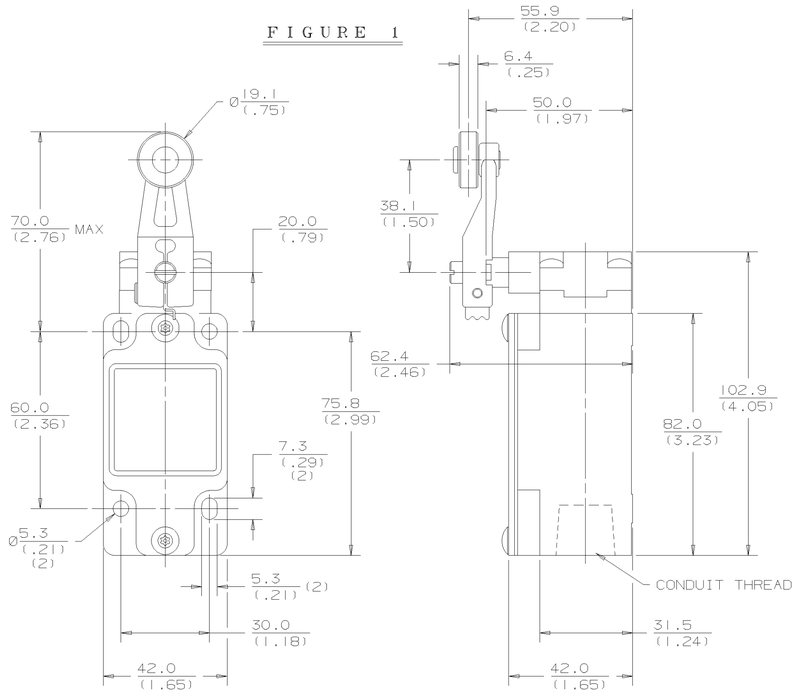

FIGURE 2

BASIC SWITCH	CONTACT BLOCK DIAGRAM	CAM ACTUATION PER EN50041 (NOMINAL TRAVELS AND RELATED TERMINALS; ▬ - CONTACT CLOSED, ▭ - CONTACT OPEN, ▨ - CONTACT CLOSED; DIFFERENTIAL TRAVEL, ** POSITIVE OPENING TO IEC 947-5-1; DIMENSIONS IN mm)	MAXIMUM OPERATING FORCE N / LB	MAXIMUM DISCONNECT FORCE N / LB	ANGULAR ACTUATION (NOMINAL TRAVELS AND RELATED TERMINALS; ▬ - CONTACT CLOSED, ▭ - CONTACT OPEN, ▨ - CONTACT CLOSED; DIFFERENTIAL TRAVEL, ** POSITIVE OPENING TO IEC 947-5-1; DIMENSIONS IN mm)	MAXIMUM OPERATING TORQUE NM / LB-IN	MAXIMUM DISCONNECT TORQUE NM / LB-IN
01, 07	SNAP ACTION SINGLE POLE (13, 14, Zb, 21, 22)	21-22, 13-14: -3.6 F.P., 20, 56** ← 12 DIFFERENTIAL TRAVEL	9.7 / 2.2	11.4 / 2.6	21-22, 13-14: 0° F.P., 26°, 55° **, 85° O.T. ← 12° DIFFERENTIAL TRAVEL	.330 / 2.9	.385 / 3.4
03, 33	SLOW ACTION BREAK BEFORE MAKE (21, 22, Zb, 13, 14)	21-22, 13-14: -3.6 F.P., 20, 32**, 32	9.7 / 2.2	11.4 / 2.6	21-22, 13-14: 0° F.P., 26°, 38° **, 85° O.T., 38°	.330 / 2.9	.385 / 3.4
04, 34	SLOW ACTION MAKE BEFORE BREAK (21, 22, Zb, 13, 14)	21-22, 13-14: -3.6 F.P., 32, 45**, 20	9.7 / 2.2	11.4 / 2.6	21-22, 13-14: 0° F.P., 38°, 50° **, 85° O.T., 26°	.330 / 2.9	.385 / 3.4
06, 36	SLOW ACTION 2 NORMALLY CLOSED (21, 22, 2Y, 11, 12)	21-22, 11-12: -3.6 F.P., 20, 32**	9.7 / 2.2	11.4 / 2.6	21-22, 11-12: 0° F.P., 26°, 38° **, 85° O.T.	.330 / 2.9	.385 / 3.4
20, 22	SNAP ACTION DOUBLE POLE (13, 14, 11, 12, 23, 24, 21, 22)	11-12, 13-14, 21-22, 23-24: -3.6 F.P., 20, 56** ← 12 DIFFERENTIAL TRAVEL	9.7 / 2.2	11.8 / 2.7	11-12, 13-14, 21-22, 23-24: 0° F.P., 26°, 55° **, 85° O.T. ← 12° DIFFERENTIAL TRAVEL	.330 / 2.9	.400 / 3.5
21, 28	SNAP ACTION DOUBLE POLE SEQUENTIAL (13, 14, STEP 1, 11, 12, 23, 24, STEP 2, 21, 22)	11-12, 13-14, 21-22, 23-24: -3.6 F.P., 20, 56** ← 7 DIFFERENTIAL TRAVEL, 38.5, 74.5** ← 8.5 DIFFERENTIAL TRAVEL	9.7 / 2.2	N/A	11-12, 13-14, 21-22, 23-24: 0° F.P., 27°, 55° **, 85° O.T. ← 7° DIFFERENTIAL TRAVEL, 42°, 70° ** ← 8° DIFFERENTIAL TRAVEL	.330 / 2.9	N/A

MIN. OPERATING VELOCITY = 8.5mm/S (0.33in/S)
MAX. OPERATING VELOCITY = 0.85M/S (33.5in/S)
MAX. OPERATING FREQUENCY = 250 OPS/MINUTE

MIN. OPERATING ACTUATION = 13°/SECOND
MAX. OPERATING ACTUATION = 1290°/SECOND
MAX. OPERATING FREQUENCY = 250 OPS/MINUTE

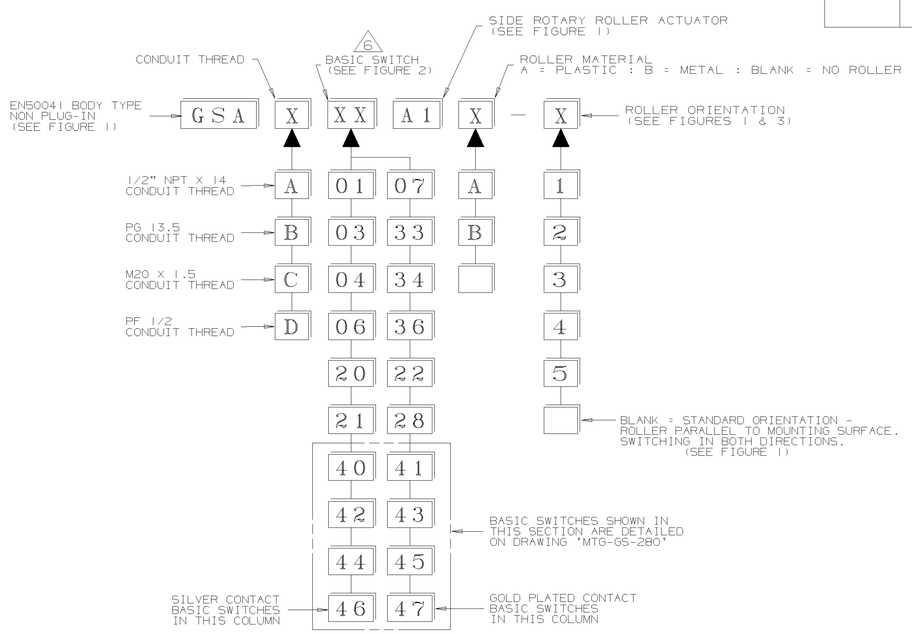

NOTES:-

1. RED EPOXY PAINT FINISHED ZINC DIE-CAST BODY AND STEEL COVER. BLACK EPOXY PAINT FINISHED ZINC DIE-CAST HEAD.
2. FREE POSITION (F.P.), OPERATING POINT, OVERTRAVEL (O.T.) AND PRETRAVEL ALL TO EN50041.
3. ANY STANDARD LISTING WITH SUFFIX 'RS' OR 'FE' IS PERMITTED.
4. LEVERS MAY BE ATTACHED TO THE SHAFT AT 90° INCREMENTS. THEY MAY ALSO BE ATTACHED, BUT NOT KEYED, ANYWHERE ON THE SHAFT.
5. HEAD AND COVER FIXED WITH TORX® SOCKET HEAD SCREWS (DRIVER SUPPLIED).
6. **BG** APPROVAL APPLIES TO ALL LISTINGS EXCEPT THOSE CONTAINING BASIC SWITCHES 20, 22, 21 & 28.

NO CHANGES CAN BE MADE TO THIS DRAWING WITHOUT JOINT NEWHOUSE/FREEPORT APPROVAL

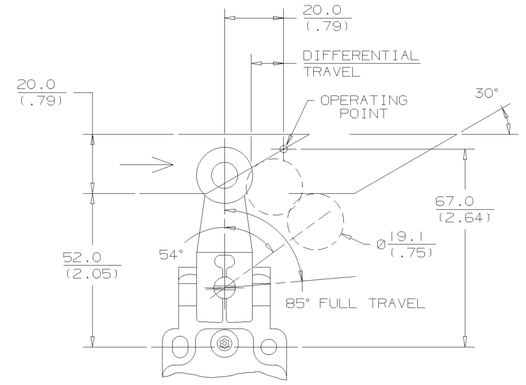

FIGURE 3

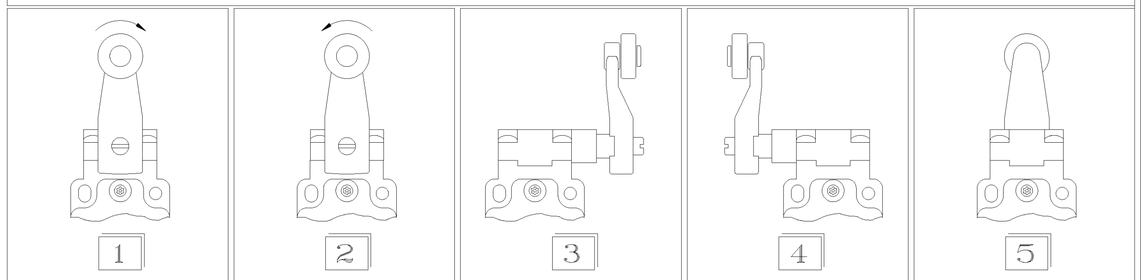

IEC 947-5-1 ELECTRICAL RATING	GOLD PLATED CONTACTS	ENVIRONMENTAL	APPROVALS
SILVER CONTACTS AC: A600 Ue, AC15 Ie — VOLTS / AMPS: 120 6, 240 3, 380 1.9, 480 1.5, 500 1.4, 600 1.2 AC (FOR 2NC): A500 Ue, AC15 Ie — VOLTS / AMPS: 120 6, 240 3, 380 1.9, 480 1.5, 500 1.4 DC: Q300 Ue, DC13 Ie — VOLTS / AMPS: 24 2.8, 125 0.55, 250 0.27	I_{th} = 10A 1V 10μA MIN. 50V 100mA MAX.	IP67 NEMA/UL 1,4,12,13 TEMP RANGE : -25°C TO 85°C / -13°F TO 185°F STORAGE : -40°C TO 85°C / -40°F TO 185°F SHOCK : 50G PER IEC 68-2-27 VIBRATION : 10G PER IEC 68-2-6	CE UL CSA BG 6 IEC 60947-5-1 EN50041

THE COPYRIGHT OF THIS DRAWING IS THE PROPERTY OF HONEYWELL LTD. THE DRAWING IS SUPPLIED IN CONFIDENCE AND MUST NOT BE USED FOR ANY PURPOSE OTHER THAN THAT FOR WHICH IT IS SUPPLIED.

THIRD ANGLE PROJECTION | SCALE:- 1/1 | DIMENSIONS ARE IN MM (INCHES) | MODIFY ON CAD SYSTEM ONLY

DRAWN I. WEIR 7/98
CHECK
DESIGN
AUTHOR'N