Elektronische Bauelemente

SCD3100

VOLTAGE 100V

3.0 AMP Surface Mount Schottky Barrier Rectifiers

RoHS Compliant Product

A suffix of "-C" specifies halogen & lead-free

2010

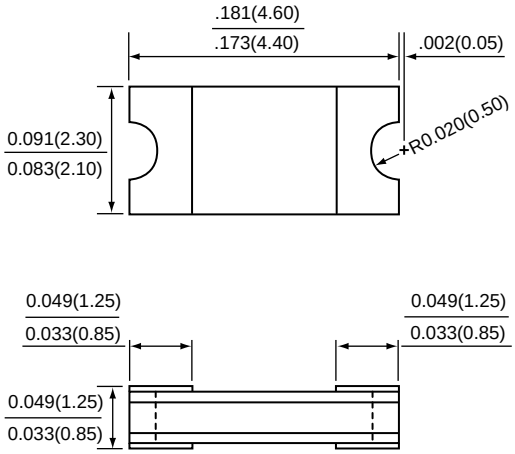

* Dimensions in inches and (millimeters)

FEATURES

- Plastic package has Underwriters Laboratory Flammability
- Classification 94V-0
- Low profile package
- Built-in strain relief
- Metal to silicon rectifier , majority carrier conduction
- Low power loss , High efficiency
- High current capability
- High surge capacity
- For using in low voltage high frequency switching power supply, inverters , free wheeling , and polarity protection applications

MECHANICAL DATA

- Case : Packed with FRP substrate and epoxy underfilled
- Terminals : Solder plated , solderable per MIL-STD-750, Method 2026
- Polarit y : Laser marking
- Weight : 0.02 gram

MAXIMUM RATINGS AND ELECTRICAL CHARACTERISTICS

Rating 25℃ ambient temperature unless otherwise specified. Single phase half wave, 60Hz, resistive or inductive load. For capacitive load, derate current by 20%.

TYPE NUMBER	SYMBOLS	SCD3100	UNITS
Maximum Recurrent Peak Reverse Voltage	V_{RRM}	100	V
Working Peak Reverse Voltage	V_{RMS}	70	V
Maximum DC Blocking Voltage	V_{DC}	100	V
Maximum Average Forward Rectified Current (See FIG. 1)	$I_{(AV)}$	3.0	A
Peak Forward Surge Current, 8.3 ms single half sine-wave superimposed on rated load (JEDEC method)	I_{FSM}	80	A
Maximum Instantaneous Forward Voltage at 3.0A (Note1)	V_F	0.85	V
Maximum DC Reverse Current (Note1) Ta=25°C	I_R	0.5	mA
at Rated DC Blocking Voltage Ta=100°C		10	
Typical Thermal Resistance (Note 2)	RθJA	55	°C / W
	RθJL	17	
Operating Temperature Range	T_J	-50 ~ +150	°C
Storage Temperature Range	T_{STG}	-65 ~ +150	°C

NOTES:

1. Pulse test width PW=300 usec, 1% duty cycle.
2. Mounted on P.C. board with 0.2 x 0.2” (5.0 x 5.0mm) copper pad areas.

Elektronische Bauelemente

SCD3100

VOLTAGE 100V

3.0 AMP Surface Mount Schottky Barrier Rectifiers

FIG.1 - FORWARD CURRENT DERATING CURVE

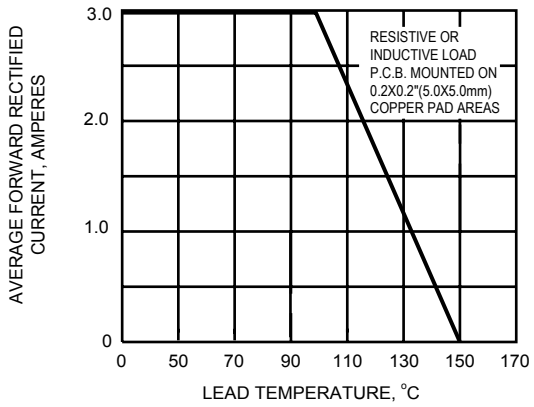

FIG.2 - MAXIMUM NON-REPETITIVE PEAK FORWARD SURGE CURRENT

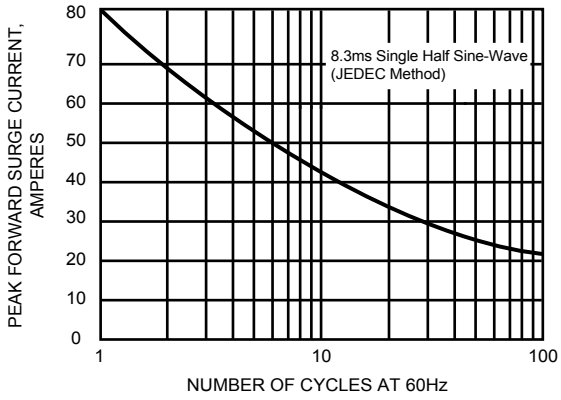

FIG.3 - TYPICAL INSTANTANEOUS FORWARD CHARACTERISTICS

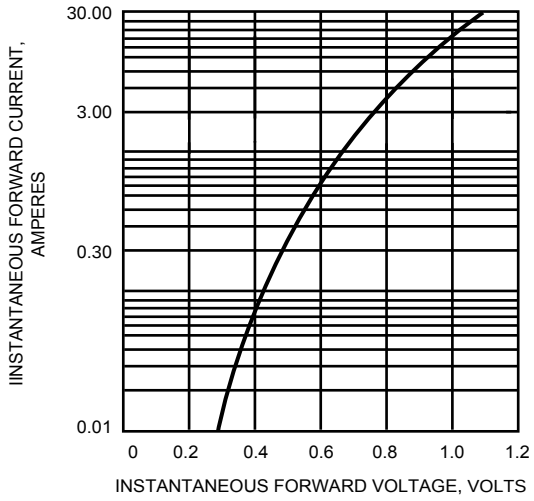

FIG.4 - TYPICAL REVERSE CHARACTERISTICS

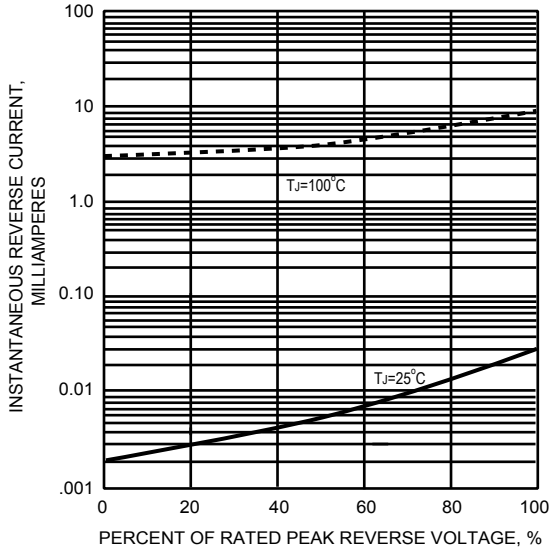
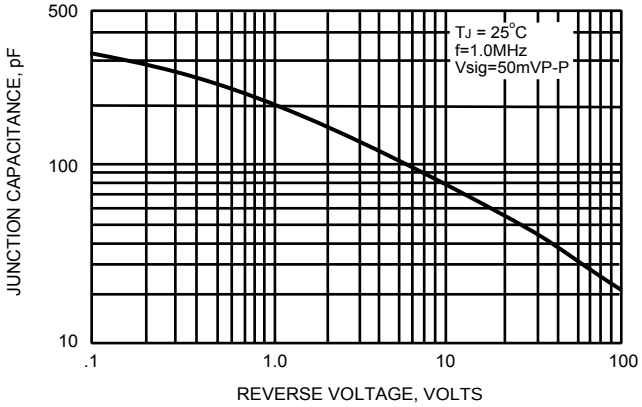
FIG.5 - TYPICAL JUNCTION CAPACITANCE