Honeywell

TruStability®
Silicon Pressure Sensors:
SSC Series–Standard Accuracy

±2% Total Error Band,
Amplified Compensated Analog Output,
1 psi to 150 psi (60 mbar to 10 bar)

DESCRIPTION

The TruStability® Standard Accuracy Silicon Ceramic (SSC) Series is a piezoresistive silicon pressure sensor offering a ratiometric analog output for reading pressure over the specified full scale pressure span and temperature range.

The SSC Series is fully calibrated and temperature compensated for sensor offset, sensitivity, temperature effects, and non-linearity using an on-board Application Specific Integrated Circuit (ASIC). Calibrated output values for pressure are updated at approximately 1 kHz.

The SSC Series is calibrated over the temperature range of -20 °C to 85 °C [-4 °F to 185 °F]. The sensor is characterized for operation from a single power supply of either 3.3 Vdc or 5.0 Vdc.

These sensors measure absolute, differential, and gage pressures. The absolute versions have an internal vacuum reference and an output value proportional to absolute pressure. Differential versions allow application of pressure to either side of the sensing diaphragm. Gage versions are referenced to atmospheric pressure and provide an output proportional to pressure variations from atmosphere.

The TruStability® pressure sensors are intended for use with non-corrosive, non-ionic gases, such as air and other dry gases. An available option extends the performance of these sensors to non-corrosive, non-ionic liquids.

All products are designed and manufactured according to ISO 9001 standards.

FEATURES

- Industry-leading long-term stability
- Extremely tight accuracy of ±0.25% FSS BFSL (Full Scale Span Best Fit Straight Line)
- Total error band of ±2% full scale span maximum
- Modular and flexible design offers customers a variety of package styles and options, all with the same industry-leading performance specifications
- Miniature 10 mm x 10 mm [0.39 in x 0.39 in] package
- Low operating voltage
- Extremely low power consumption
- Ratiometric analog output
- High resolution (min. 0.03 %FSS)
- Precision ASIC conditioning and temperature compensated over -20 °C to 85 °C [-4 °F to 185 °F] temperature range
- RoHS compliant
- Virtually insensitive to mounting orientation
- Internal diagnostic functions increase system reliability
- Also available with I^2C or SPI digital output
- Absolute, differential and gage types
- Pressure ranges from 1 psi to 150 psi (60 mbar to 10 bar)
- Custom calibration available
- Various pressure port options
- Liquid media option

POTENTIAL APPLICATIONS

- **Medical:**
  - Airflow monitors
  - Anesthesia machines
  - Blood analysis machines
  - Gas chromatography
  - Gas flow instrumentation
  - Kidney dialysis machines
  - Oxygen concentrators
  - Pneumatic controls
  - Respiratory machines
  - Sleep apnea equipment
  - Ventilators
- **Industrial:**
  - Barometry
  - Flow calibrators
  - Gas chromatography
  - Gas flow instrumentation
  - HVAC
  - Life sciences
  - Pneumatic controls

Table 1. Absolute Maximum Ratings[1]

Parameter	Min.	Max.	Unit
Supply voltage (V_{supply})	-0.3	6.0	Vdc
Voltage on any pin	-0.3	V_{supply} + 0.3	V
ESD susceptibility (human body model)	3	-	kV
Storage temperature	-40 [-40]	85 [185]	°C [°F]
Soldering time and temperature: Lead solder (SIP, DIP) Peak reflow (SMT)	 4 s max. at 250 °C [482 °F] 15 s max. at 250 °C [482 °F]		

Table 2. Operating Specifications

Parameter	Min.	Typ.	Max.	Unit
Supply voltage (V_{supply})[2]: 3.3 Vdc 5.0 Vdc *Sensors are either 3.3 Vdc or 5.0 Vdc based on listing selected.*	 3.0 4.75	 3.3[3] 5.0[3]	 3.6 5.25	Vdc
Supply current: 3.3 Vdc supply 5.0 Vdc supply	 - -	 1.6 2	 2.1 3	mA
Compensated temperature range[4]	-20 [-4]	-	85 [185]	°C [°F]
Operating temperature range[5]	-40 [-40]	-	85 [185]	°C [°F]
Startup time (power up to data ready)	-	-	5	ms
Response time	-	1	-	ms
Upper output clipping limit	-	-	97.5	%V_{supply}
Lower output clipping limit	2.5	-	-	%V_{supply}
Accuracy[6]	-	-	±0.25	%FSS BFSL
Total error band[7]	-	-	±2	%FSS[8]
Output resolution	0.03	-	-	%FSS[8]

±2% Total Error Band, Analog Output, 1 psi to 150 psi (60 mbar to 10 bar)

Table 3. Environmental Specifications

Parameter	Characteristic
Humidity:	
Dry gases only (See “Options N and D” in Figure 1.)	0% to 95% RH, non-condensing
Liquid media (See “Options T and V” in Figure 1.)	100% condensing or direct liquid media on Port 1
Vibration	MIL-STD-202F, Curve AK (20.7 g random)
Shock	MIL-STD-202F, Method 213B, Condition F
Life[9]	1 million cycles minimum
Solder reflow	J-STD-020-C

Table 4. Wetted Materials[10]

Parameter	Port 1 (Pressure Port)	Port 2 (Reference Port)
Covers	high temperature polyamide	high temperature polyamide
Substrate	alumina ceramic	alumina ceramic
Adhesives	epoxy, silicone	epoxy, silicone
Electronic components	ceramic, glass, solder, silicon	silicon, glass, gold, solder

Notes:

1. Absolute maximum ratings are the extreme limits the device will withstand without damage.
2. Ratiometricity of the sensor (the ability of the device to scale to the supply voltage) is achieved within the specified operating voltage for each option.
3. The sensor is not reverse polarity protected. Incorrect application of supply voltage or ground to the wrong pin may cause electrical failure.
4. The compensated temperature range is the temperature range over which the sensor will produce an output proportional to pressure within the specified performance limits.
5. The operating temperature range is the temperature range over which the sensor will produce an output proportional to pressure but may not remain within the specified performance limits.
6. Accuracy: The maximum deviation in output from a Best Fit Straight Line (BFSL) fitted to the output measured over the pressure range at 25 °C [77 °F]. Includes all errors due to pressure non-linearity, pressure hysteresis, and non-repeatability.
7. Total Error Band: The maximum deviation from the ideal transfer function over the entire compensated temperature and pressure range. Includes all errors due to offset, full scale span, pressure non-linearity, pressure hysteresis, repeatability, thermal effect on offset, thermal effect on span, and thermal hysteresis.
8. Full Scale Span (FSS) is the algebraic difference between the output signal measured at the maximum (Pmax.) and minimum (Pmin.) limits of the pressure range. (See Figure 1 for ranges.)
9. Life may vary depending on specific application in which sensor is utilized.
10. Contact Honeywell Customer Service for detailed material information.

CAUTION

PRODUCT DAMAGE

- Ensure liquid media is applied to Port 1 only; Port 2 is not compatible with liquids.
- Ensure liquid media contains no particulates. All TruStability® sensors are dead-ended devices. Particulates can accumulate inside the sensor, causing damage or affecting sensor output.
- Recommend that the sensor be positioned with Port 1 facing downwards; any particulates in the system are less likely to enter and settle within the pressure sensor if it is in this position.
- Ensure liquid media does not create a residue when dried; build-up inside the sensor may affect sensor output. Rinsing of a dead-ended sensor is difficult and has limited effectiveness for removing residue.
- Ensure liquid media are compatible with wetted materials. Non-compatible liquid media will degrade sensor performance and may lead to sensor failure.

Failure to comply with these instructions may result in product damage.

Figure 1. Nomenclature and Order Guide

SSC _ _ _ _ _ _ _ _ **A A** _

Series

Package
D = DIP (Dual Inline Pin)
M = SMT (Surface Mount Technology)
S = SIP (Single Inline Pin)

Supply Voltage
3 = 3.3 Vdc
5 = 5.0 Vdc

Transfer Function[11]
A = 10% to 90% of Vsupply

Output Type[12]
A = Analog voltage

Pressure Port (* indicates not available)

DIP	*SMT*	*SIP*
NN = No ports	**NN** = No ports	**NN** = No ports
*	*	**AA** = Dual axial barbed ports, opposite sides
AN = Single axial barbed port	**AN** = Single axial barbed port	**AN** = Single axial barbed port
LN = Single axial barbless port	**LN** = Single axial barbless port	**LN** = Single axial barbless port
*	*	**FF** = Fastener mount, dual axial barbed ports, opposite sides
*	*	**FN** = Fastener mount, single axial barbed port
*	*	**GN** = Ribbed fastener mount, single axial barbed port
*	*	**NB** = Fastener mount, dual axial ports, same side
RN = Single radial barbed port	**RN** = Single radial barbed port	**RN** = Single radial barbed port
RR = Dual radial barbed ports, same side	**RR** = Dual radial barbed ports, same side	**RR** = Dual radial barbed ports, same side
DR = Dual radial barbed ports, opposite sides	**DR** =Dual radial barbed ports, opposite sides	**DR** = Dual radial barbed ports, opposite sides
*	*	**HH** = Fastener mount, dual radial barbed ports, same side
*	*	**HN** = Fastener mount, single radial barbed port
*	*	**MN** = Manifold mount, outer diameter seal
*	*	**SN** = Manifold mount, inner diameter seal

Pressure Range[13, 14]

1 psi to 150 psi

Absolute
015PA = 0 psi to 15 psi
030PA = 0 psi to 30 psi
060PA = 0 psi to 60 psi
100PA = 0 psi to 100 psi
150PA = 0 psi to 150 psi

Differential
001PD = ±1 psi
005PD = ±5 psi
015PD = ±15 psi
030PD = ±30 psi
060PD = ±60 psi

Gage
001PG = 0 psi to 1 psi
005PG = 0 psi to 5 psi
015PG = 0 psi to 15 psi
030PG = 0 psi to 30 psi
060PG = 0 psi to 60 psi
100PG = 0 psi to 100 psi
150PG = 0 psi to 150 psi

60 mbar to 10 bar

Absolute
001BA = 0 bar to 1 bar
1.6BA = 0 bar to 1.6 bar
2.5BA = 0 bar to 2.5 bar
004BA = 0 bar to 4 bar
006BA = 0 bar to 6 bar
010BA = 0 bar to 10 bar

Differential
060MD = ±60 mbar
100MD = ±100 mbar
160MD = ±160 mbar
250MD = ±250 mbar
400MD = ±400 mbar
600MD = ±600 mbar
001BD = ±1 bar
1.6BD = ±1.6 bar
2.5BD = ±2.5 bar
004BD = ±4 bar

Gage
060MG = 0 mbar to 60 mbar
100MG = 0 mbar to 100 mbar
160MG = 0 mbar to 160 mbar
250MG = 0 mbar to 250 mbar
400MG = 0 bar to 400 mbar
600MG = 0 bar to 600 mbar
001BG = 0 bar to 1 bar
1.6BG = 0 bar to 1.6 bar
2.5BG = 0 bar to 2.5 bar
004BG = 0 bar to 4 bar
006BG = 0 bar to 6 bar
010BG = 0 bar to 10 bar

Options[15]
N = Dry gases only, no special options
D = Dry gases only, diagnostics on
T = Liquid media on Port 1, no diagnostics
V = Liquid media on Port 1, diagnostics on

Notes:

11. The transfer function limits define the output of the sensor at a given pressure input. By specifying Pmin. and Pmax., the output at Pmin. and Pmax., the complete transfer function of the sensor is defined. See Figure 2 for a graphical representation of the transfer function. Other transfer functions are available. Contact Honeywell Customer Service for more information.
12. Digital outputs (SPI or I^2C) are also available. Contact Honeywell Customer Service for more information.
13. Custom pressure ranges are available. Contact Honeywell Customer Service for more information.
14. See Table 5 for an explanation of sensor pressure types.
15. See **CAUTION** on previous page.

±2% Total Error Band, Analog Output, 1 psi to 150 psi (60 mbar to 10 bar)

Figure 2. Transfer Function Limits

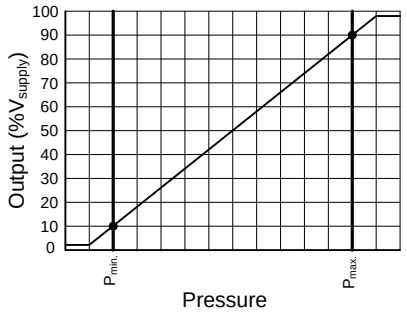

$$\text{Output (V)} = \frac{0.8 \times V_{supply}}{P_{max.} - P_{min.}} \times (\text{Pressure}_{applied} - P_{min.}) + 0.10 \times V_{supply}$$

Figure 3. Completed Catalog Listing Example

SSCSANN100PGAA3
SIP package, AN pressure port, no diagnostics, 100 psi gage, analog output, 10% to 90% calibration at 3.3 Vdc.

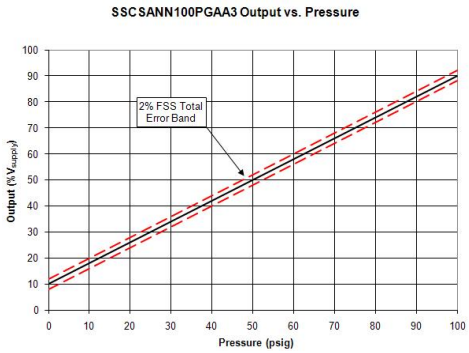

Table 5. Pressure Types

Pressure Type	Description
Absolute	Output is proportional to the difference between applied pressure and a built-in reference to vacuum. $P_{min.}$ is set at absolute zero pressure (full vacuum).
Differential	Output is proportional to the difference between the pressures applied to each port. (Port 1 – Port 2) 50% point of transfer function set at Port 1 = Port 2.
Gage	Output is proportional to the difference between applied pressure and atmospheric (ambient) pressure. $P_{min.}$ is set at atmospheric pressure.

Table 6. Pressure Range Specifications for 1 psi to 150 psi

Order Code	Pressure Range		Over-pressure[16]	Burst Pressure[17]	Common Mode Pressure[18]	Long-term Stability (1000 hr, 25 °C [77 °F])
	$P_{min.}$	$P_{max.}$				
Absolute						
015PA	0 psi	15 psi	30 psi	60 psi	NA	±0.25% FSS
030PA	0 psi	30 psi	60 psi	120 psi	NA	±0.25% FSS
060PA	0 psi	60 psi	120 psi	240 psi	NA	±0.25% FSS
100PA	0 psi	100 psi	250 psi	250 psi	NA	±0.25% FSS
150PA	0 psi	150 psi	250 psi	250 psi	NA	±0.25% FSS
Differential						
001PD	-1 psi	1 psi	10 psi	10 psi	150 psi	±0.35% FSS
005PD	-5 psi	5 psi	30 psi	40 psi	150 psi	±0.35% FSS
015PD	-15 psi	15 psi	30 psi	60 psi	150 psi	±0.25% FSS
030PD	-30 psi	30 psi	60 psi	120 psi	150 psi	±0.25% FSS
060PD	-60 psi	60 psi	120 psi	240 psi	250 psi	±0.25% FSS
Gage						
001PG	0 psi	1 psi	10 psi	10 psi	150 psi	±0.35% FSS
005PG	0 psi	5 psi	30 psi	40 psi	150 psi	±0.35% FSS
015PG	0 psi	15 psi	30 psi	60 psi	150 psi	±0.25% FSS
030PG	0 psi	30 psi	60 psi	120 psi	150 psi	±0.25% FSS
060PG	0 psi	60 psi	120 psi	240 psi	250 psi	±0.25% FSS
100PG	0 psi	100 psi	250 psi	250 psi	250 psi	±0.25% FSS
150PG	0 psi	150 psi	250 psi	250 psi	250 psi	±0.25% FSS

TruStability® Silicon Pressure Sensors: SSC Series–Standard Accuracy

Table 7. Pressure Range Specifications for 60 mbar to 10 bar

Order Code	Pressure Range		Over-pressure[16]	Burst Pressure[17]	Common Mode Pressure[18]	Long-term Stability (1000 hr, 25 °C [77 °F])
	$P_{min.}$	$P_{max.}$				
Absolute						
001BA	0 bar	1 bar	2 bar	4 bar	NA	±0.25% FSS
1.6BA	0 bar	1.6 bar	4 bar	8 bar	NA	±0.25% FSS
2.5BA	0 bar	2.5 bar	6 bar	8 bar	NA	±0.25% FSS
004BA	0 bar	4 bar	8 bar	16 bar	NA	±0.25% FSS
006BA	0 bar	6 bar	17 bar	17 bar	NA	±0.25% FSS
010BA	0 bar	10 bar	17 bar	17 bar	NA	±0.25% FSS
Differential						
060MD	-60 mbar	60 mbar	500 mbar	700 mbar	10 bar	±0.35% FSS
100MD	-100 mbar	100 mbar	500 mbar	700 mbar	10 bar	±0.35% FSS
160MD	-160 mbar	160 mbar	500 mbar	700 mbar	10 bar	±0.35% FSS
250MD	-250 mbar	250 mbar	1.4 bar	2.5 bar	10 bar	±0.35% FSS
400MD	-400 mbar	400 mbar	1.4 bar	2.5 bar	10 bar	±0.35% FSS
600MD	-600 mbar	600 mbar	2 bar	4 bar	10 bar	±0.25% FSS
001BD	-1 bar	1 bar	2 bar	4 bar	10 bar	±0.25% FSS
1.6BD	-1.6 bar	1.6 bar	4 bar	8 bar	10 bar	±0.25% FSS
2.5BD	-2.5 bar	2.5 bar	6 bar	8 bar	10 bar	±0.25% FSS
004BD	-4 bar	4 bar	8 bar	16 bar	10 bar	±0.25% FSS
Gage						
060MG	0 mbar	60 mbar	500 mbar	700 mbar	3.5 bar	±0.35% FSS
100MG	0 mbar	100 mbar	500 mbar	700 mbar	10 bar	±0.35% FSS
160MG	0 mbar	160 mbar	500 mbar	700 mbar	10 bar	±0.35% FSS
250MG	0 mbar	250 mbar	1.4 bar	2.5 bar	10 bar	±0.35% FSS
400MG	0 mbar	400 mbar	1.4 bar	2.5 bar	10 bar	±0.35% FSS
600MG	0 mbar	600 mbar	2 bar	4 bar	10 bar	±0.35% FSS
001BG	0 bar	1 bar	2 bar	4 bar	10 bar	±0.25% FSS
1.6BG	0 bar	1.6 bar	4 bar	8 bar	10 bar	±0.25% FSS
2.5BG	0 bar	2.5 bar	6 bar	8 bar	10 bar	±0.25% FSS
004BG	0 bar	4 bar	8 bar	16 bar	16 bar	±0.25% FSS
006BG	0 bar	6 bar	17 bar	17 bar	17 bar	±0.25% FSS
010BG	0 bar	10 bar	17 bar	17 bar	17 bar	±0.25% FSS

Notes:

16. Overpressure: The maximum pressure which may safely be applied to the product for it to remain in specification once pressure is returned to the operating pressure range. Exposure to higher pressures may cause permanent damage to the product. Unless otherwise specified this applies to all available pressure ports at any temperature with the operating temperature range.
17. Burst pressure: The maximum pressure that may be applied to any port of the product without causing escape of pressure media. Product should not be expected to function after exposure to any pressure beyond the burst pressure.
18. Common mode pressure: The maximum pressure that can be applied simultaneously to both ports of a differential pressure sensor without causing changes in specified performance.

Table 8. Pinout for DIP and SMT Packages

Output Type	Pin 1	Pin 2	Pin 3	Pin 4	Pin 5	Pin 6	Pin 7	Pin 8
analog	NC	V_{supply}	OUTPUT+	GND	NC	NC	NC	NC

Table 9. Pinout for SIP Package

Output Type	Pin 1	Pin 2	Pin 3	Pin 4
analog	NC	V_{supply}	OUTPUT+	GND

±2% Total Error Band, Analog Output, 1 psi to 150 psi (60 mbar to 10 bar)

Figure 4. DIP Pressure Port Dimensional Drawings (For reference only: mm [in])

DIP NN: No ports

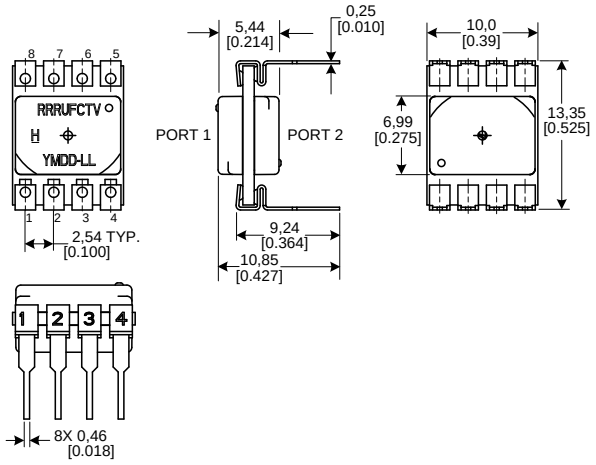

DIP AN: Single axial barbed port

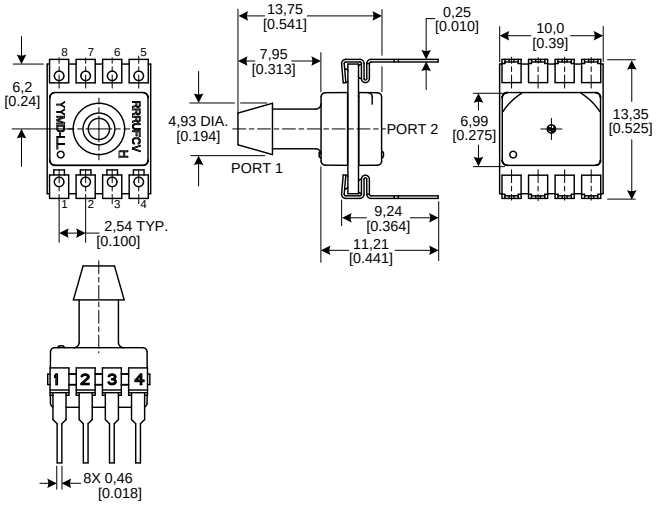

DIP LN: Single axial barbless port

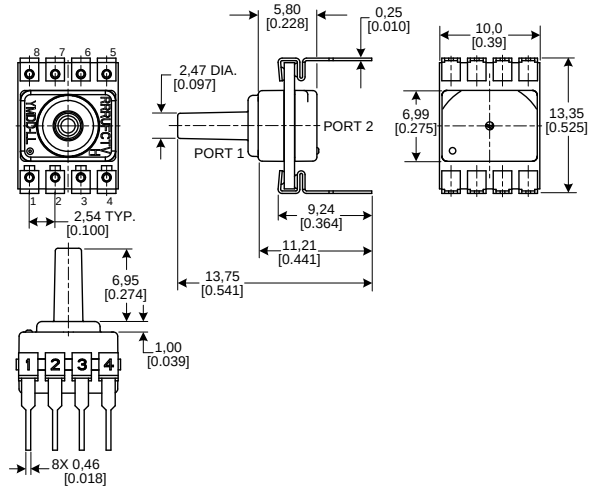

DIP RN: Single radial barbed port

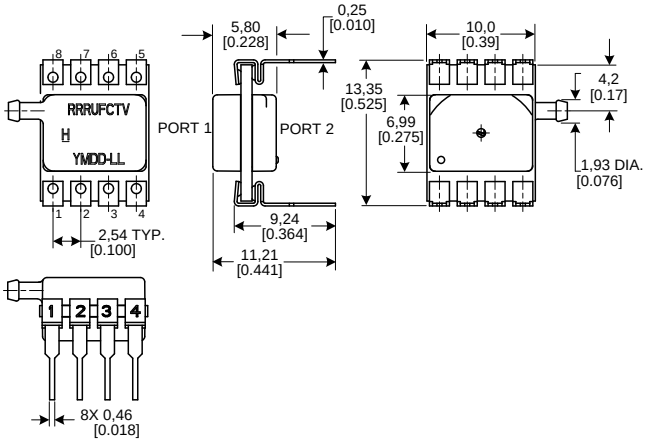

DIP RR: Dual radial barbed ports, same side

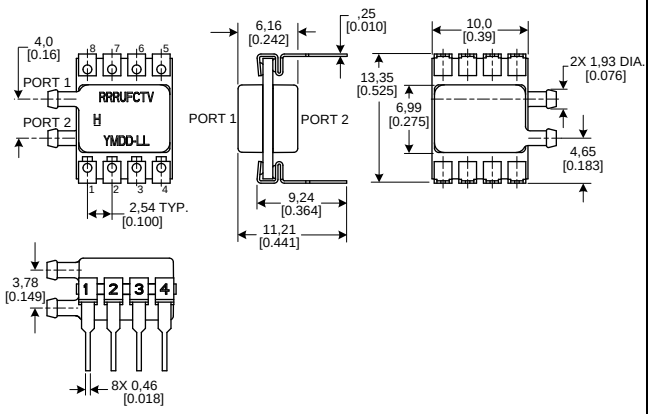

DIP DR: Dual radial barbed ports, opposite sides

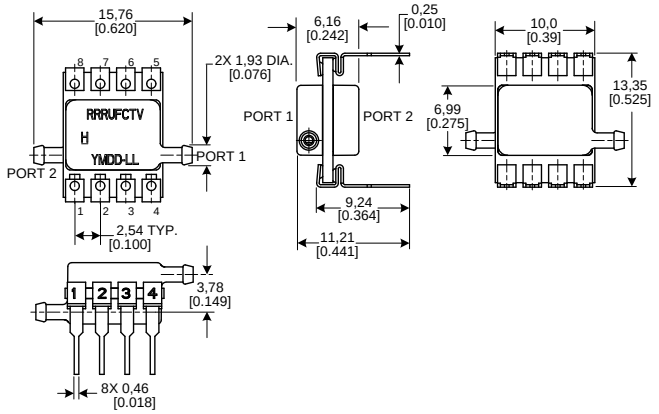

Figure 5. SMT Pressure Port Dimensional Drawings (For reference only: mm [in])

SMT NN: No ports

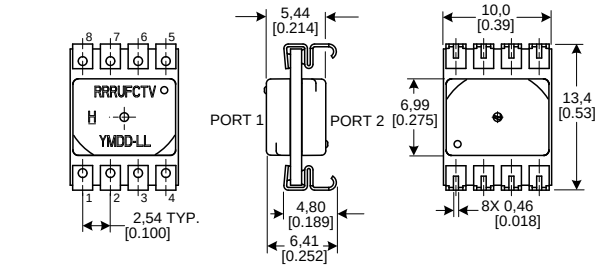

SMT AN: Single axial barbed port

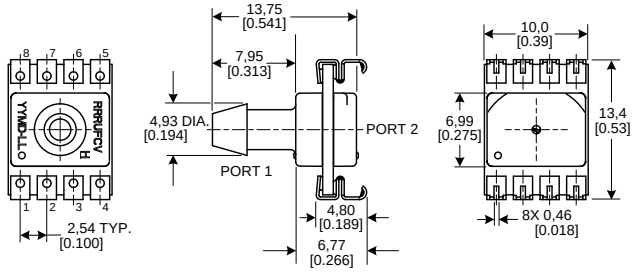

SMT LN: Single axial barbless port

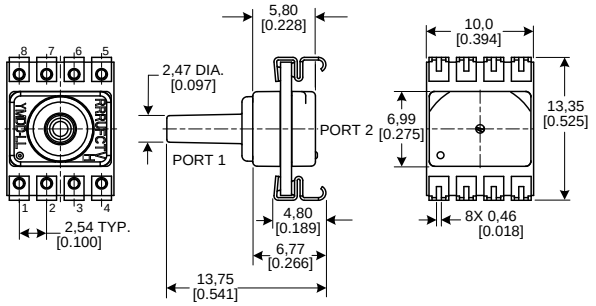

SMT RN: Single radial barbed port

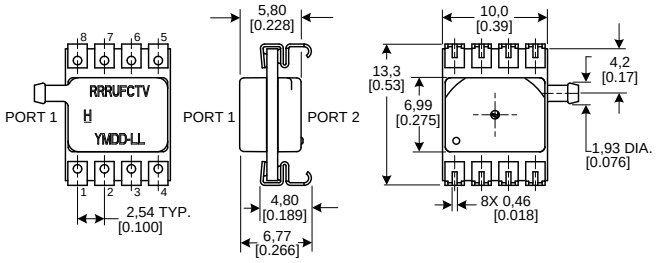

SMT RR: Dual radial barbed ports, same side

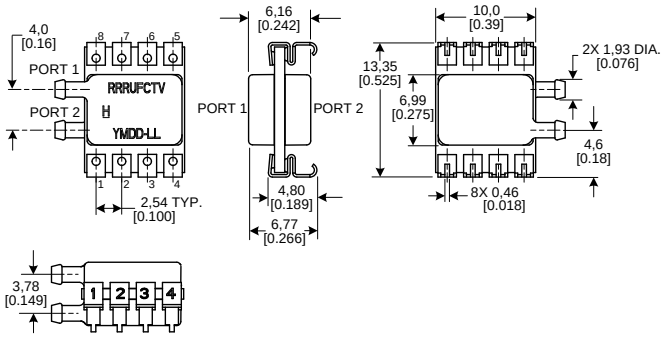

SMT DR: Dual radial barbed ports, opposite sides

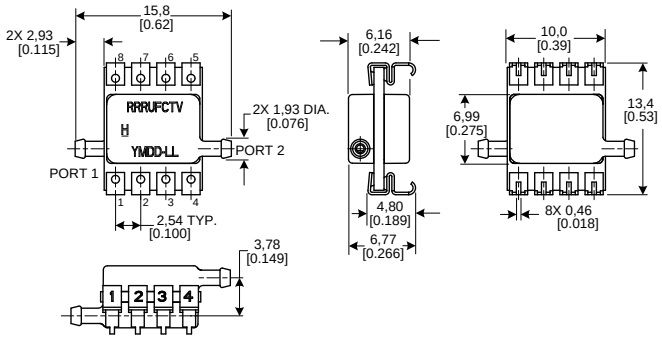

±2% Total Error Band, Analog Output, 1 psi to 150 psi (60 mbar to 10 bar)

Figure 6. SIP Package Dimensional Drawings (For reference only: mm [in])

SIP NN: No ports

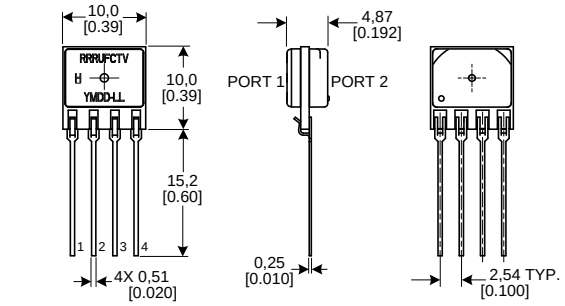

SIP AA: Dual axial barbed ports, opposite sides

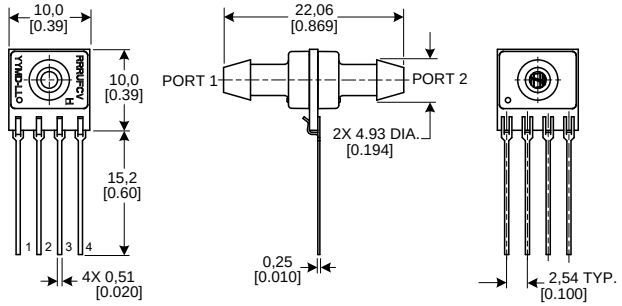

SIP AN: Single axial barbed port

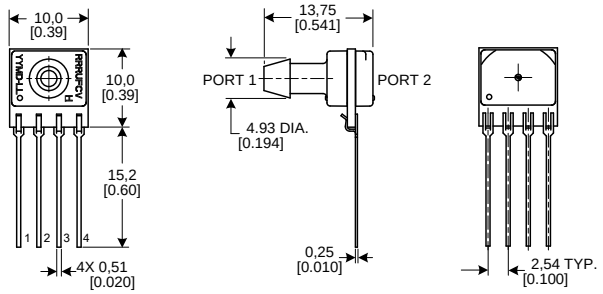

SIP LN: Single barbless port

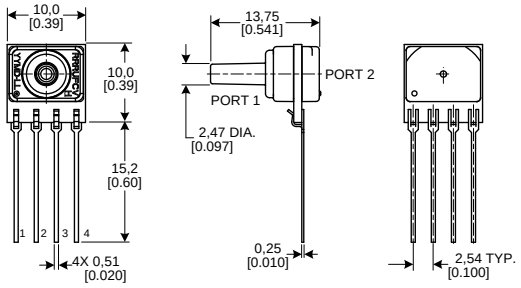

SIP FF: Fastener mount, dual axial barbed ports, opposite sides

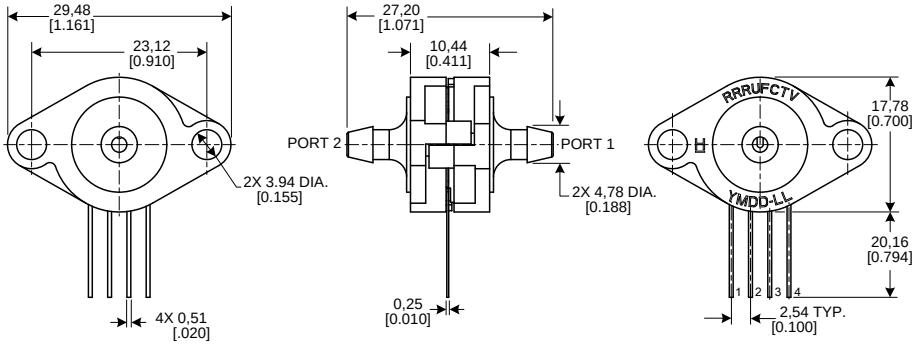

SIP FN: Fastener mount, single axial barbed port

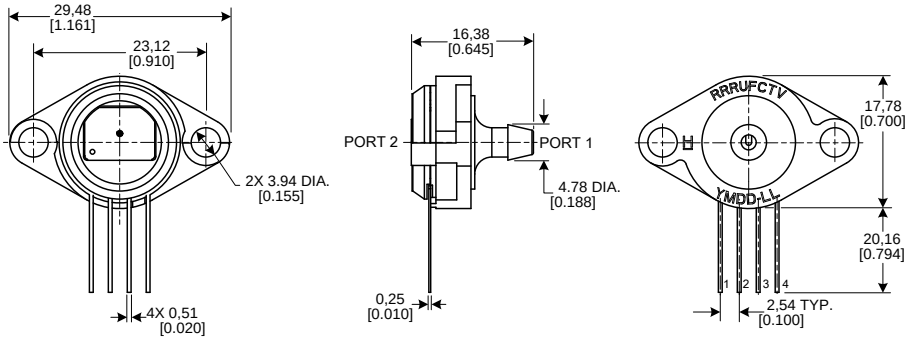

Figure 6. SIP Package Dimensional Drawings (continued)

SIP GN: Ribbed fastener mount, single axial barbed port

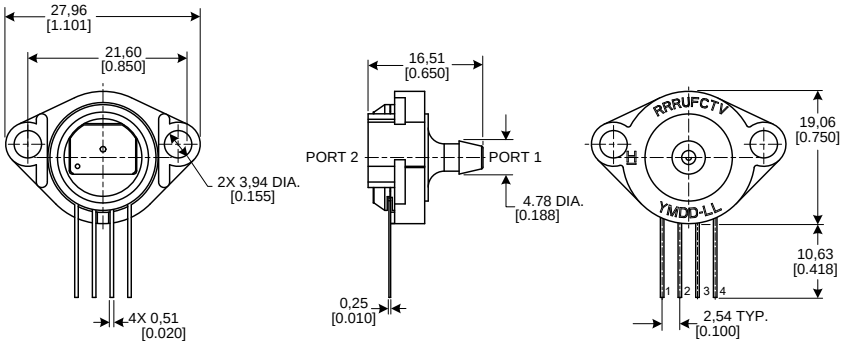

SIP NB: Fastener mount, dual axial ports, same side

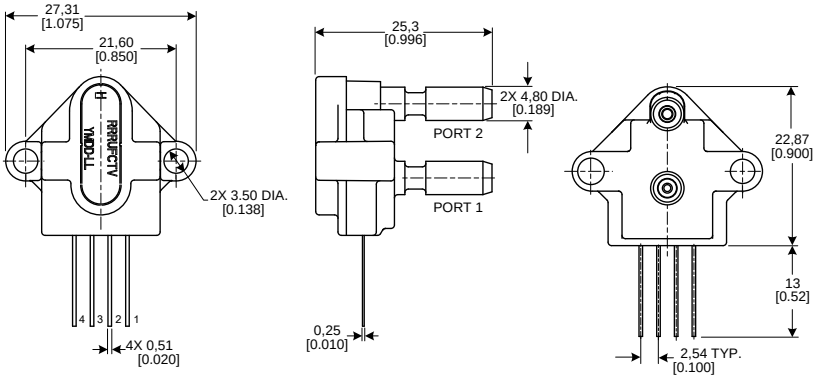

SIP RN: Single radial barbed port

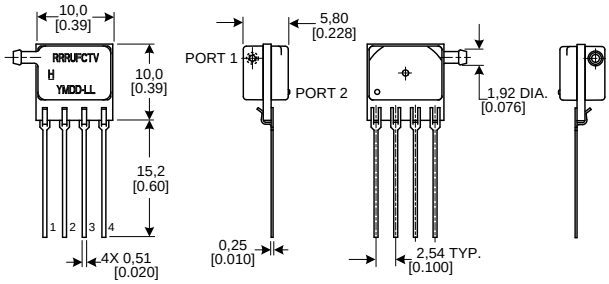

SIP RR: Dual radial barbed ports, same side

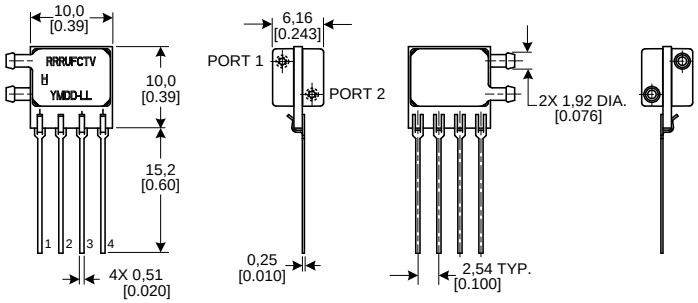

±2% Total Error Band, Analog Output, 1 psi to 150 psi (60 mbar to 10 bar)

Figure 6. SIP Package Dimensional Drawings (continued)

SIP DR: Dual radial barbed ports, opposite side

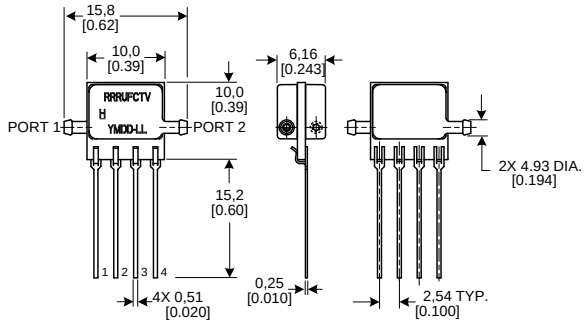

SIP HH: Fastener mount, dual radial barbed ports, same side

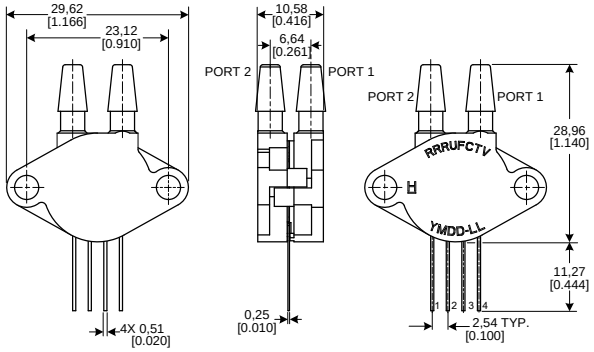

SIP HN: Fastener mount, single radial barbed port

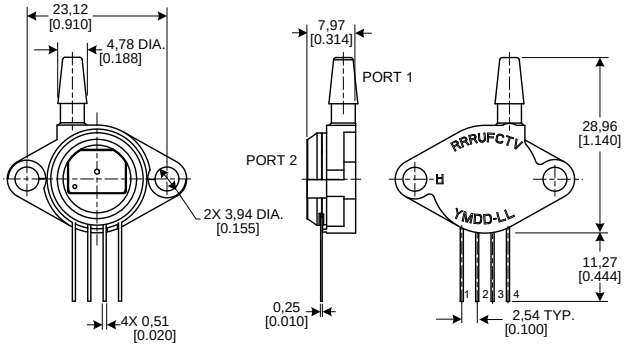

SIP MN: Manifold mount, outer diameter seal

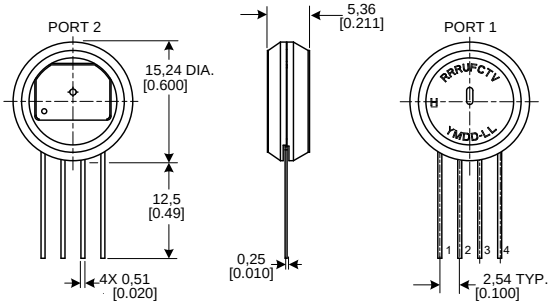

SIP SN: Manifold mount, inner diameter seal

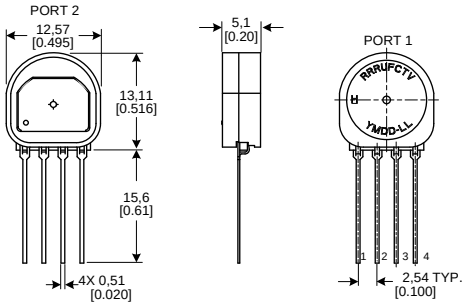

⚠ WARNING

PERSONAL INJURY

DO NOT USE these products as safety or emergency stop devices or in any other application where failure of the product could result in personal injury.

Failure to comply with these instructions could result in death or serious injury.

WARRANTY/REMEDY

Honeywell warrants goods of its manufacture as being free of defective materials and faulty workmanship. Honeywell's standard product warranty applies unless agreed to otherwise by Honeywell in writing; please refer to your order acknowledgement or consult your local sales office for specific warranty details. If warranted goods are returned to Honeywell during the period of coverage, Honeywell will repair or replace, at its option, without charge those items it finds defective. **The foregoing is buyer's sole remedy and is in lieu of all other warranties, expressed or implied, including those of merchantability and fitness for a particular purpose. In no event shall Honeywell be liable for consequential, special, or indirect damages.**

While we provide application assistance personally, through our literature and the Honeywell web site, it is up to the customer to determine the suitability of the product in the application.

Specifications may change without notice. The information we supply is believed to be accurate and reliable as of this printing. However, we assume no responsibility for its use.

⚠ WARNING

MISUSE OF DOCUMENTATION

- The information presented in this product sheet is for reference only. DO NOT USE this document as a product installation guide.
- Complete installation, operation, and maintenance information is provided in the instructions supplied with each product.

Failure to comply with these instructions could result in death or serious injury.

SALES AND SERVICE

Honeywell serves its customers through a worldwide network of sales offices, representatives and distributors. For application assistance, current specifications, pricing or name of the nearest Authorized Distributor, contact your local sales office or:

E-mail: info.sc@honeywell.com

Internet: www.honeywell.com/sensing

Phone and Fax:

Asia Pacific	+65 6355-2828; +65 6445-3033 Fax
Europe	+44 (0) 1698 481481; +44 (0) 1698 481676 Fax
Latin America	+1-305-805-8188; +1-305-883-8257 Fax
USA/Canada	+1-800-537-6945; +1-815-235-6847 +1-815-235-6545 Fax

Sensing and Control
Honeywell
1985 Douglas Drive North
Golden Valley, MN 55422
www.honeywell.com

Honeywell

008215-2-EN IL50 GLO Printed in USA
March 2011
© 2011 Honeywell International Inc.

Mouser Electronics

Authorized Distributor

Click to View Pricing, Inventory, Delivery & Lifecycle Information:

Honeywell:

SSCSRRN015PGAA5 SSCSRRN400MDAA5 SSCSMNN001PGAA5 SSCSMNN005PGAA3 SSCSMNN030PGAA3 SSCSMNN030PGAA5 SSCSMNN060PGAA3 SSCSMNN100PGAA5 SSCSMNN150PGAA5 SSCSMNN015PAAA5 SSCSMNN600MGAA5 SSCSMNN001BGAA5 SSCSMNN010BGAA5 SSCSMNN004NDAA5 SSCSSNN005PDAA5 SSCSSNN015PDAA5 SSCSSNN150PGAA5 SSCSSNN015PAAA5 SSCSFNN001PGAA5 SSCSHHN001PDAA5 SSCDANV005PGAA5 SSCDLNN150PGAA5 SSCMLNN150PGAA5 SSCDLNT1.6BAAA5 SSCDRRT250MDAA5 SSCSMND002NGAA5 SSCSMND005NGAA5 SSCSMND010NGAA5 SSCSNBN030NDAA5 SSCSSND002NGAA5 SSCSSND005NGAA5 SSCSSND010NGAA5 SSCSANN015PAAA5 SSCSSNN001PGAA5 SSCSSNN015PGAA5 SSCSSNN100PGAA5 SSCDRRN005PGAA3 SSCDRRN001PDAA5 SSCDRRN005PDAA5 SSCDRRN015PDAA5 SSCDRRN030PDAA5 SSCDRRN001PGAA5 SSCDRRN005PGAA5 SSCDRRN060MDAA5 SSCDRRN100MDAA5 SSCDRRN160MDAA5 SSCDRRN250MDAA5 SSCDRRN100MGAA5 SSCDRRN010NDAA5 SSCDRRN020NDAA5 SSCDRNN015PAAA5 SSCDRNN030PAAA5 SSCDRNN160MDAA5 SSCDRNN600MDAA5 SSCDRNN250MGAA5 SSCDNNN015PAAA5 SSCMDRN001PDAA5 SSCMRRN001PDAA5 SSCMRRN015PGAA5 SSCMRRN100MDAA5 SSCMRRN100MGAA5 SSCMRRN010NDAA5 SSCMRNN100PGAA5 SSCMRNN015PAAA5 SSCMRNN030PAAA5 SSCMRNN100MGAA5 SSCMRNN050KGAA5 SSCMANN001PGAA5 SSCMANN005PGAA5 SSCMANN100PGAA5 SSCMANN015PAAA5 SSCMNND001PDAA3 SSCMNND001PGAA3 SSCMNNN015PAAA3 SSCDRRN005PDAA3 SSCDRRN025MDAA3 SSCDANN006BGAA3 SSCMRRN001PDAA3 SSCMRRN005PDAA3 SSCMRRN001PGAA3 SSCMRRN005PGAA3 SSCMRRN060MDAA3 SSCMRRN100MDAA3 SSCMRRN060MGAA3 SSCMRNN015PAAA3 SSCMRNN100MGAA3 SSCMRNN600MGAA3 SSCMANN001PGAA3 SSCMANN150PGAA3 SSCMANN150PAAA3 SSCMANN006BGAA3 SSCSNBN001PDAA5 SSCSNBN005PDAA5 SSCSNBN015PDAA5 SSCSNBN030PDAA5 SSCSNBN060PDAA5 SSCSNBN100PDAA5 SSCSNBN150PDAA5 SSCSNBN001PGAA5 SSCSNBN005PGAA5