TN8, TS8 and TYNx08 Series

8A SCRs

MAIN FEATURES:

Symbol	Value	Unit
$I_{T(RMS)}$	8	A
V_{DRM}/V_{RRM}	600 to 1000	V
I_{GT}	0.2 to 15	mA

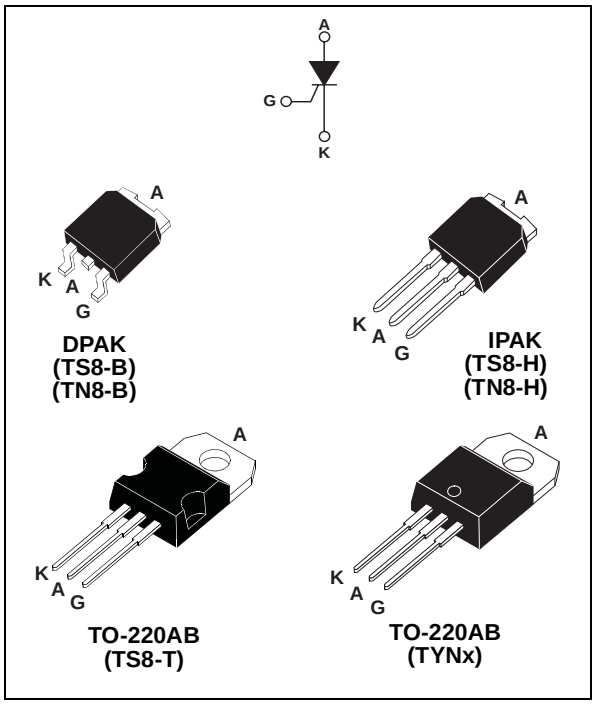

DESCRIPTION

Available either in sensitive (TS8) or standard (TN8 / TYN) gate triggering levels, the 8A SCR series is suitable to fit all modes of control, found in applications such as overvoltage crowbar protection, motor control circuits in power tools and kitchen aids, inrush current limiting circuits, capacitive discharge ignition and voltage regulation circuits...
Available in through-hole or surface-mount packages, they provide an optimized performance in a limited space area.

ABSOLUTE RATINGS (limiting values)

Symbol	Parameter			Value		Unit
$I_{T(RMS)}$	RMS on-state current (180° conduction angle)		Tc = 110°C	8		A
$IT_{(AV)}$	Average on-state current (180° conduction angle)		Tc = 110°C	5		A
				TS8/TN8	TYN	
I_{TSM}	Non repetitive surge peak on-state current	tp = 8.3 ms	Tj = 25°C	73	100	A
		tp = 10 ms		70	95	
I^2t	I^2t Value for fusing	tp = 10 ms	Tj = 25°C	24.5	45	A^2S
dI/dt	Critical rate of rise of on-state current $I_G = 2 \times I_{GT}$, tr ≤ 100 ns	F = 60 Hz	Tj = 125°C	50		A/µs
I_{GM}	Peak gate current	tp = 20 µs	Tj = 125°C	4		A
$P_{G(AV)}$	Average gate power dissipation		Tj = 125°C	1		W
T_{stg} Tj	Storage junction temperature range Operating junction temperature range			- 40 to + 150 - 40 to + 125		°C
V_{RGM}	Maximum peak reverse gate voltage (for TN8 & TYN only)			5		V

资料提供：可控硅在线 http://www.kkg.com.cn

ELECTRICAL CHARACTERISTICS (Tj = 25°C, unless otherwise specified)

■ **SENSITIVE**

Symbol	Test Conditions			TS820	Unit
I_{GT}	V_D = 12 V R_L = 140 Ω		MAX.	200	µA
V_{GT}			MAX.	0.8	V
V_{GD}	$V_D = V_{DRM}$ R_L = 3.3 kΩ R_{GK} = 220 Ω	Tj = 125°C	MIN.	0.1	V
V_{RG}	I_{RG} = 10 µA		MIN.	8	V
I_H	I_T = 50 mA R_{GK} = 1 kΩ		MAX.	5	mA
I_L	I_G = 1 mA R_{GK} = 1 kΩ		MAX.	6	mA
dV/dt	V_D = 65 % V_{DRM} R_{GK} = 220 Ω	Tj = 125°C	MIN.	5	V/µs
V_{TM}	I_{TM} = 16 A tp = 380 µs	Tj = 25°C	MAX.	1.6	V
V_{t0}	Threshold voltage	Tj = 125°C	MAX.	0.85	V
R_d	Dynamic resistance	Tj = 125°C	MAX.	46	mΩ
I_{DRM} I_{RRM}	$V_{DRM} = V_{RRM}$ R_{GK} = 220 Ω	Tj = 25°C	MAX.	5	µA
		Tj = 125°C		1	mA

■ **STANDARD**

Symbol	Test Conditions			TN805	TN815	TYNx08	Unit
I_{GT}	V_D = 12 V R_L = 33 Ω		MIN.	0.5	2	2	mA
			MAX.	5	15	15	
V_{GT}			MAX.	1.3			V
V_{GD}	$V_D = V_{DRM}$ R_L = 3.3 kΩ	Tj = 125°C	MIN.	0.2			V
I_H	I_T = 100 mA Gate open		MAX.	25	40	30	mA
I_L	I_G = 1.2 I_{GT}		MAX.	30	50	70	mA
dV/dt	V_D = 67 % V_{DRM} Gate open	Tj = 125°C	MIN.	50	150	150	V/µs
V_{TM}	I_{TM} = 16 A tp = 380 µs	Tj = 25°C	MAX.	1.6			V
V_{t0}	Threshold voltage	Tj = 125°C	MAX.	0.85			V
R_d	Dynamic resistance	Tj = 125°C	MAX.	46			mΩ
I_{DRM} I_{RRM}	$V_{DRM} = V_{RRM}$	Tj = 25°C	MAX.	5			µA
		Tj = 125°C		2			mA

THERMAL RESISTANCES

Symbol	Parameter			Value	Unit
$R_{th(j-c)}$	Junction to case (DC)			20	°C/W
$R_{th(j-a)}$	Junction to ambient (DC)		TO-220AB	60	°C/W
			IPAK	100	
		S = 0.5 cm^2	DPAK	70	

S= copper surface under tab

资料提供：可控硅在线 http://www.kkg.com.cn

PRODUCT SELECTOR

Part Number	Voltage (xxx)				Sensitivity	Package
	600 V	700 V	800 V	1000 V		
TN805-xxxB	X		X		5 mA	DPAK
TN805-xxxH	X		X		5 mA	IPAK
TN815-xxxB	X		X		15 mA	DPAK
TN815-xxxH	X		X		15 mA	IPAK
TS820-xxxB	X	X			0.2 mA	DPAK
TS820-xxxH	X	X			0.2 mA	IPAK
TS820-xxxT	X	X			0.2 mA	TO-220AB
TYNx08	X		X	X	15 mA	TO-220AB

ORDERING INFORMATION

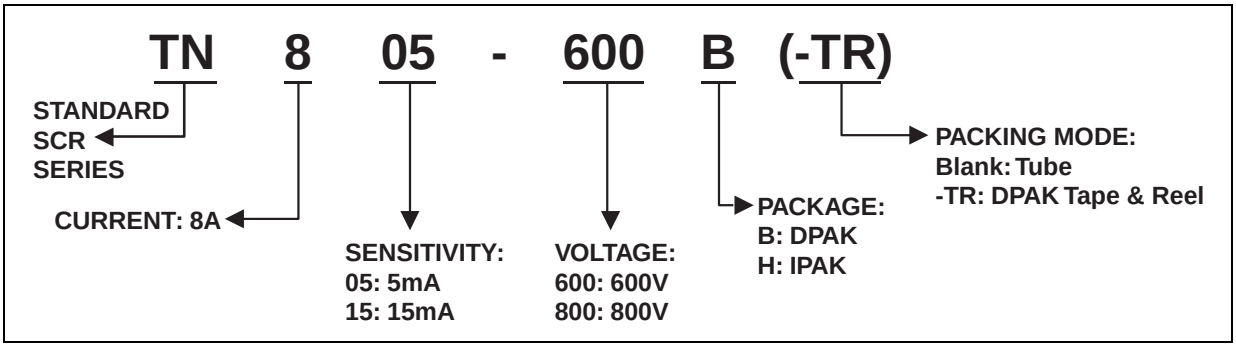

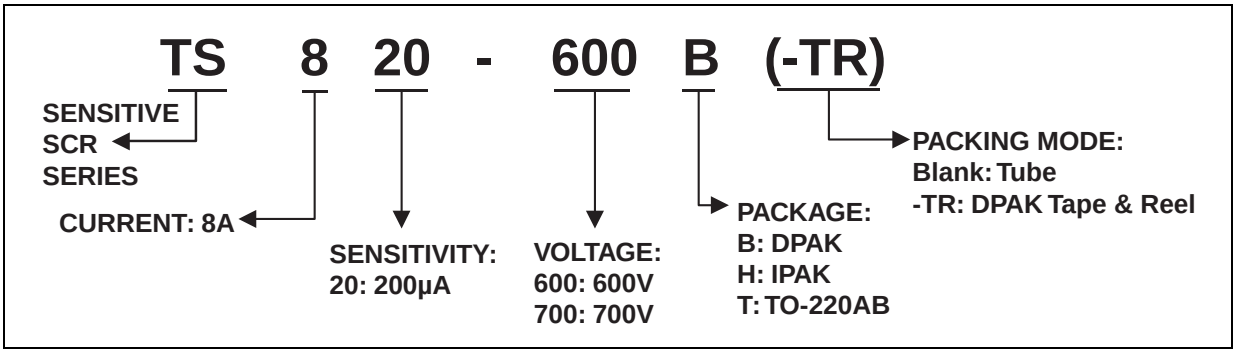

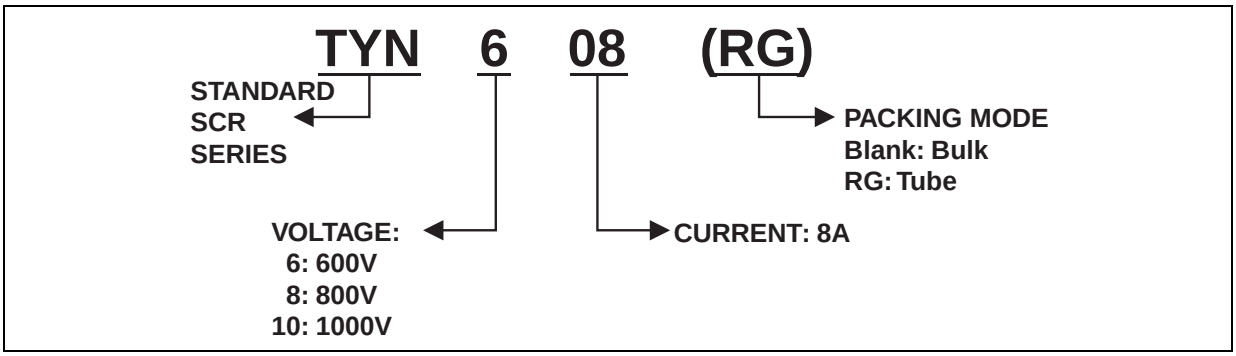

资料提供：可控硅在线 http://www.kkg.com.cn

OTHER INFORMATION

Part Number	Marking	Weight	Base Quantity	Packing mode
TN805-x00B	TN805x00	0.3 g	75	Tube
TN805-x00B-TR	TN805x00	0.3 g	2500	Tape & reel
TN805-x00H	TN805x00	0.4 g	75	Tube
TN815-x00B	TN815x00	0.3 g	75	Tube
TN815-x00B-TR	TN815x00	0.3 g	2500	Tape & reel
TN815-x00H	TN815x00	0.4 g	75	Tube
TS820-x00B	TS820x00	0.3 g	75	Tube
TS820-x00B-TR	TS820x00	0.3 g	2500	Tape & reel
TS820-x00H	TS820x00	0.4 g	75	Tube
TS820-x00T	TS820x00T	2.3 g	50	Tube
TYNx08	TYNx08	2.3 g	250	Bulk
TYNx08RG	TYNx08	2.3 g	50	Tube

Note: x = voltage

Fig. 1: Maximum average power dissipation versus average on-state current.

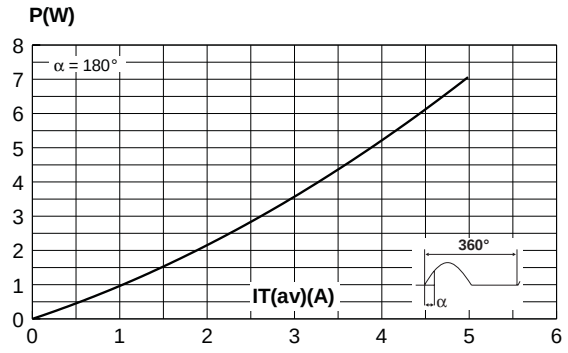

Fig. 2-1: Average and D.C. on-state current versus case temperature.

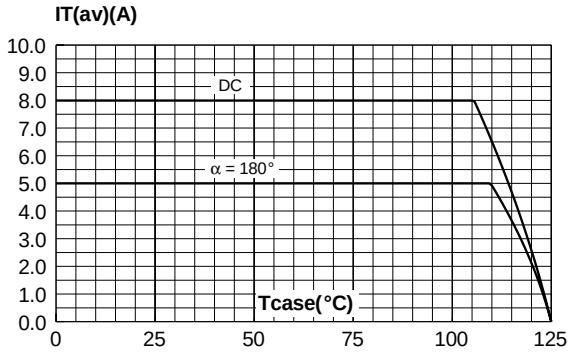

Fig. 2-2: Average and D.C. on-state current versus ambient temperature (device mounted on FR4 with recommended pad layout) (DPAK).

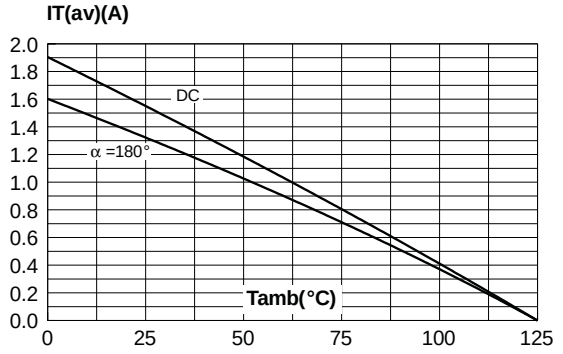

Fig. 3-1: Relative variation of thermal impedance junction to case versus pulse duration.

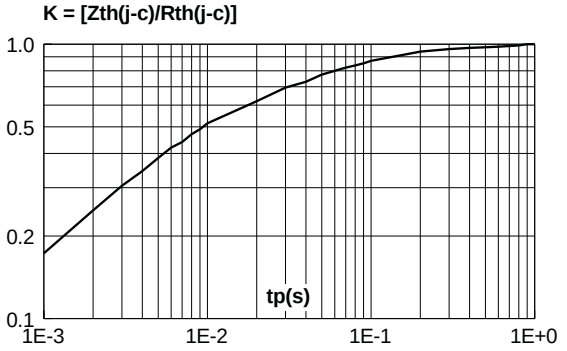

资料提供：可控硅在线 http://www.kkg.com.cn

Fig. 3-2: Relative variation of thermal impedance junction to ambient versus pulse duration (recommended pad layout, FR4 PC board for DPAK).

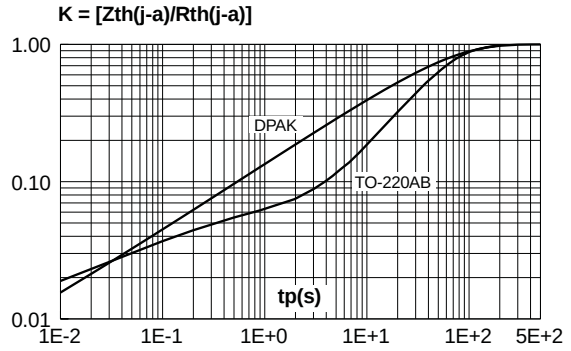

Fig. 4-1: Relative variation of gate trigger current and holding current versus junction temperature for TS8 series.

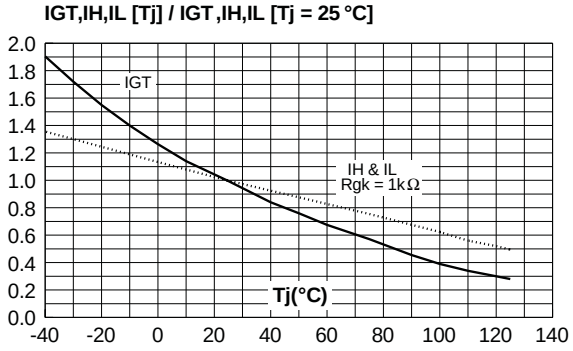

Fig. 4-2: Relative variation of gate trigger current and holding current versus junction temperature for TN8 & TYN series.

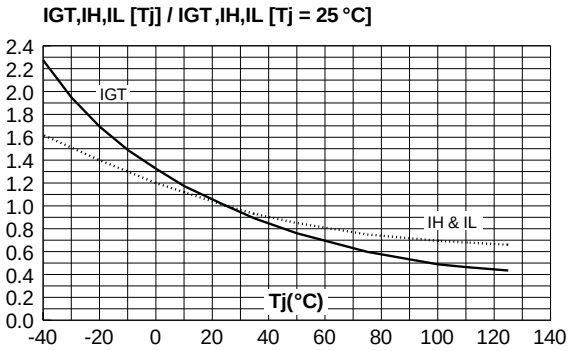

Fig. 5: Relative variation of holding current versus gate-cathode resistance (typical values) for TS8 series.

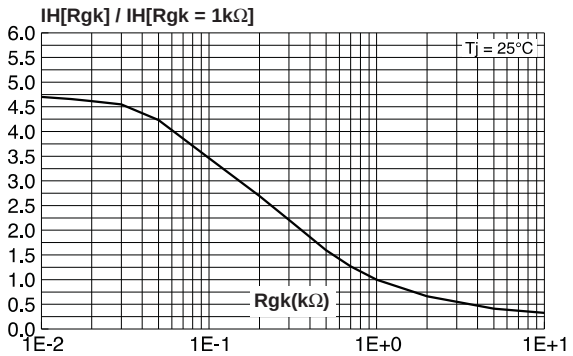

Fig. 6: Relative variation of dV/dt immunity versus gate-cathode resistance (typical values) for TS8 series.

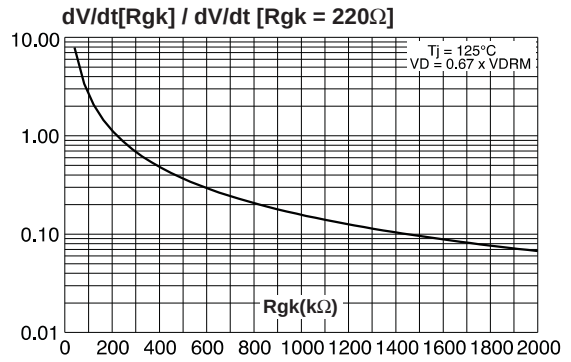

Fig. 7: Relative variation of dV/dt immunity versus gate-cathode capacitance (typical values) for TS8 series.

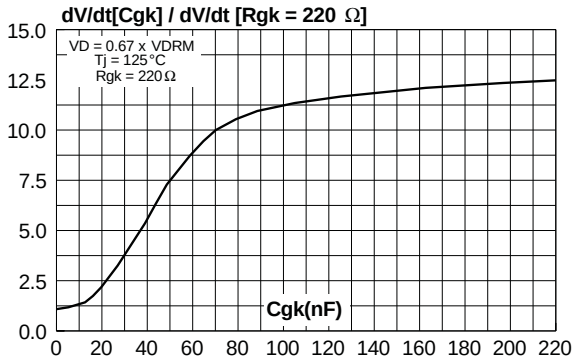

资料提供：可控硅在线 http://www.kkg.com.cn

Fig. 8: Surge peak on-state current versus number of cycles. TS8/TN8/TYN.

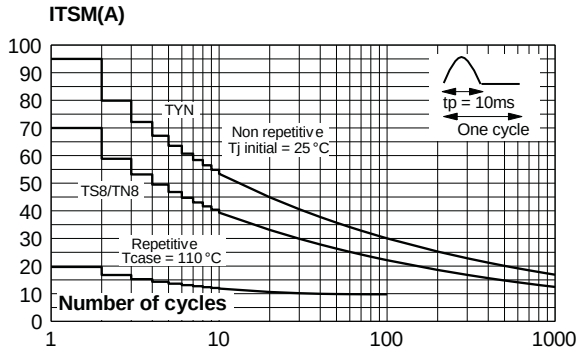

Fig. 9: Non-repetitive surge peak on-state current for a sinusoidal pulse with width tp < 10 ms, and corresponding values of I²t.

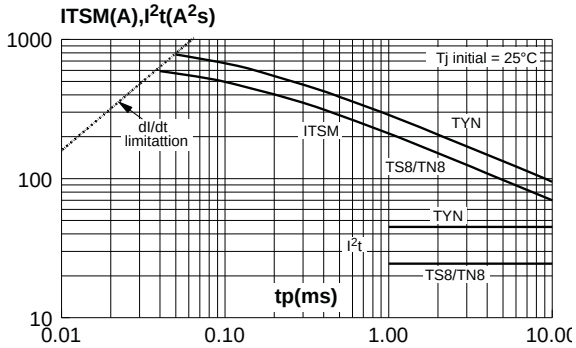

Fig. 10: On-state characteristics (maximum values).

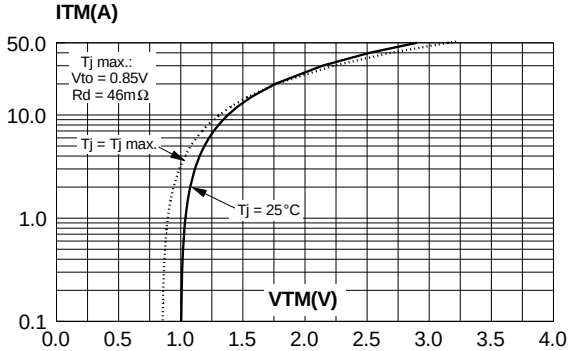

Fig. 11: Thermal resistance junction to ambient versus copper surface under tab (Epoxy printed circuit board FR4, copper thickness: 35 µm) (DPAK).

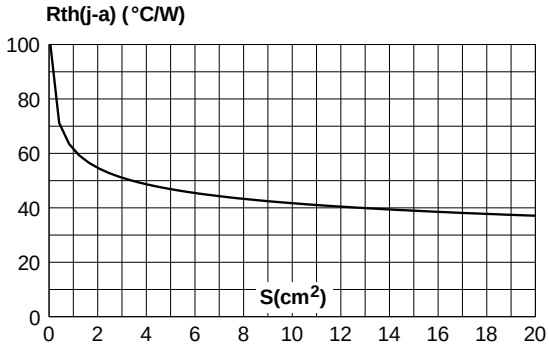

资料提供：可控硅在线 http://www.kkg.com.cn

PACKAGE MECHANICAL DATA

DPAK (Plastic)

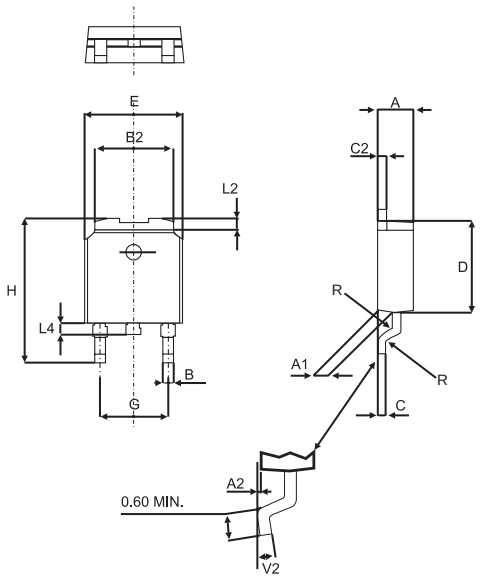

REF.	DIMENSIONS			
	Millimeters		Inches	
	Min.	Max	Min.	Max.
A	2.20	2.40	0.086	0.094
A1	0.90	1.10	0.035	0.043
A2	0.03	0.23	0.001	0.009
B	0.64	0.90	0.025	0.035
B2	5.20	5.40	0.204	0.212
C	0.45	0.60	0.017	0.023
C2	0.48	0.60	0.018	0.023
D	6.00	6.20	0.236	0.244
E	6.40	6.60	0.251	0.259
G	4.40	4.60	0.173	0.181
H	9.35	10.10	0.368	0.397
L2	0.80 typ.		0.031 typ.	
L4	0.60	1.00	0.023	0.039
R	0.2 typ.		0.007 typ.	
V2	0°	8°	0°	8°

FOOTPRINT DIMENSIONS (in millimeters)

DPAK (Plastic)

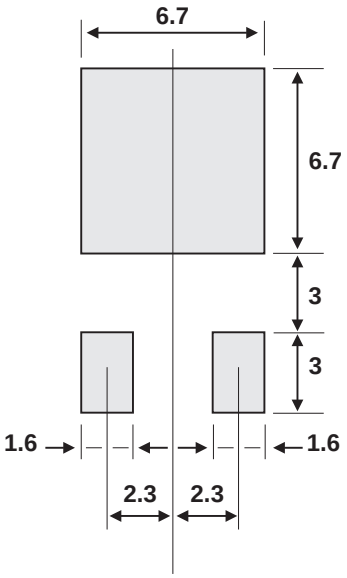

资料提供：可控硅在线 http://www.kkg.com.cn

PACKAGE MECHANICAL DATA

IPAK (Plastic)

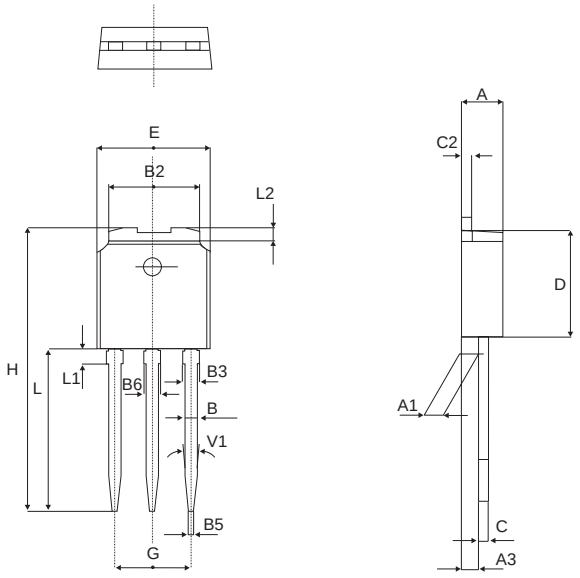

REF.	DIMENSIONS					
	Millimeters			Inches		
	Min.	Typ.	Max.	Min.	Typ.	Max.
A	2.2		2.4	0.086		0.094
A1	0.9		1.1	0.035		0.043
A3	0.7		1.3	0.027		0.051
B	0.64		0.9	0.025		0.035
B2	5.2		5.4	0.204		0.212
B3			0.85			0.033
B5		0.3			0.035	
B6			0.95			0.037
C	0.45		0.6	0.017		0.023
C2	0.48		0.6	0.019		0.023
D	6		6.2	0.236		0.244
E	6.4		6.6	0.252		0.260
G	4.4		4.6	0.173		0.181
H	15.9		16.3	0.626		0.641
L	9		9.4	0.354		0.370
L1	0.8		1.2	0.031		0.047
L2		0.8	1		0.031	0.039
V1		10°			10°	

TO-220AB (Plastic - with notches)

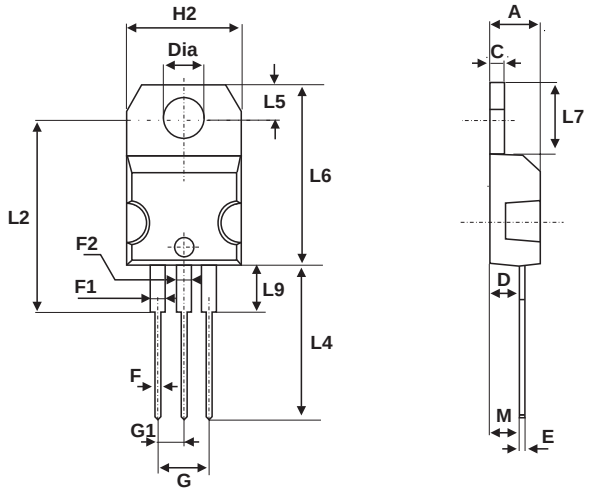

REF.	DIMENSIONS			
	Millimeters		Inches	
	Min.	Max.	Min.	Max.
A	4.40	4.60	0.173	0.181
C	1.23	1.32	0.048	0.051
D	2.40	2.72	0.094	0.107
E	0.49	0.70	0.019	0.027
F	0.61	0.88	0.024	0.034
F1	1.14	1.70	0.044	0.066
F2	1.14	1.70	0.044	0.066
G	4.95	5.15	0.194	0.202
G1	2.40	2.70	0.094	0.106
H2	10	10.40	0.393	0.409
L2	16.4 typ.		0.645 typ.	
L4	13	14	0.511	0.551
L5	2.65	2.95	0.104	0.116
L6	15.25	15.75	0.600	0.620
L7	6.20	6.60	0.244	0.259
L9	3.50	3.93	0.137	0.154
M	2.6 typ.		0.102 typ.	
Diam.	3.75	3.85	0.147	0.151

资料提供：可控硅在线 http://www.kkg.com.cn

PACKAGE MECHANICAL DATA

TO-220AB (Without notches)

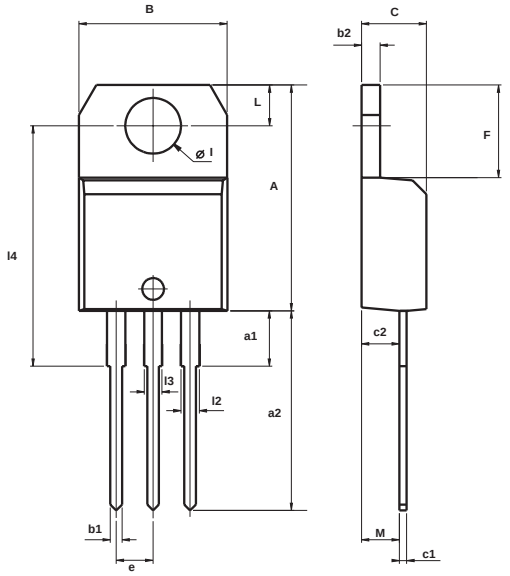

REF.	DIMENSIONS					
	Millimeters			Inches		
	Min.	Typ.	Max.	Min.	Typ.	Max.
A	15.20		15.90	0.598		0.625
a1		3.75			0.147	
a2	13.00		14.00	0.511		0.551
B	10.00		10.40	0.393		0.409
b1	0.61		0.88	0.024		0.034
b2	1.23		1.32	0.048		0.051
C	4.40		4.60	0.173		0.181
c1	0.49		0.70	0.019		0.027
c2	2.40		2.72	0.094		0.107
e	2.40		2.70	0.094		0.106
F	6.20		6.60	0.244		0.259
I	3.75		3.85	0.147		0.151
l4	15.80	16.40	16.80	0.622	0.646	0.661
L	2.65		2.95	0.104		0.116
l2	1.14		1.70	0.044		0.066
l3	1.14		1.70	0.044		0.066
M		2.60			0.102	

资料提供：可控硅在线 http://www.kkg.com.cn