EMH Series

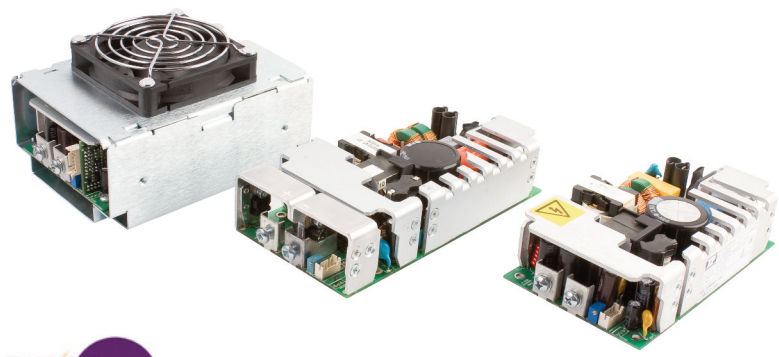

- 250 W & 350 W Forced–cooled
- Industry Standard 3”x 5”x 1.43”Format
- IT & Medical (BF) Approvals
- 80 V – 275 VAC Operation
- Optional ORing Diode (EMH350D Models)
- Analog & PMBus Signals Options (EMH350)
- 5 V Standby (EMH350)
- 3 Year Warranty

The EMH series of ultra compact high power density supplies deliver 250 W and 350W within the industry standard 3” x 5” (76mm x 127mm) footprint. They achieve this very high power density with a minimal 12 CFM forced air requirement and a profile of just 1.4” (36 mm) making them suitable for 1U and a host of other applications.

All models feature a main output and 12V/0.6A fan supply output along with IEC60950 (IT) and IEC60601 BF (Medical) family safety approvals, thus including patient contact equipment in the wide range of possible applications.

The EMH350 has a 5V/2A standby rail and can be supplied with a range of optional analogue and digital, PMBus compatible signals as well as a variable speed fan & cover. The EMH350D models have built in Oring diodes for use in redundant applications.

Models & Ratings

Output Voltage V1	Output Current V1	Fan Supply V3[1]	Output Power	Model Number[1]
12 V	21.0 A	12 V/0.6 A	252 W	EMH250PS12
18 V	14.0 A	12 V/0.6 A	252 W	EMH250PS18
24 V	10.5 A	12 V/0.6 A	252 W	EMH250PS24
48 V	5.2 A	12 V/0.6 A	250 W	EMH250PS48

Output Voltage V1	Output Current V1	Standby Supply V2	Fan Supply V3[2]	Output Power	Model Number[2]
12 V	29.2 A	5.0 V / 2.0 A	12 V/0.6 A	354 W	EMH350PS12
18 V	19.5 A	5.0 V / 2.0 A	12 V/0.6 A	354 W	EMH350PS18
24 V	14.6 A	5.0 V / 2.0 A	12 V/0.6 A	355 W	EMH350PS24
48 V	7.3 A	5.0 V / 2.0 A	12 V/0.6 A	354 W	EMH350PS48

Output Voltage V1	Output Current V1	Standby Supply V2	Fan Supply V3	Output Power	Model Number[3]
12 V	29.2 A	5.0 V / 2.0 A	12 V/0.6 A	354 W	EMH350PS12D
18 V	19.5 A	5.0 V / 2.0 A	12 V/0.6 A	354 W	EMH350PS18D
24 V	14.6 A	5.0 V / 2.0 A	12 V/0.6 A	355 W	EMH350PS24D
48 V	7.3 A	5.0 V / 2.0 A	12 V/0.6 A	354 W	EMH350PS48D

Notes:
1. The EMH250 is available with a top mounted fan cover option. Add suffix '-TF' to model number e.g. EMH250PS12-TF. See mechanical drawing later in this datasheet. The fan supply V3 is no longer available with this option as it is used to drive the fan.
2. The EMH350 is available with various analog, digital signal and cover options. See availability table and mechanical drawing later in this datasheet. The fan supply V3 is no longer available with cover options as it is used to drive the fan.
3. The EMH350D models are fitted with an integral ORing diode and are also available with various analog and digital signal options. See availability table and mechanical drawing later in this datasheet.

Input Characteristics

Characteristic	Minimum	Typical	Maximum	Units	Notes & Conditions
Input Voltage - Operating	80	115/230	275	VAC	Derate output power < 90 VAC. See fig. 1
Input Frequency	47	50/60	63	Hz	
Power Factor		>0.9			EN61000-3-2 class A compliant
Input Current - No Load		0.05/0.03		A	115/230 VAC
Input Current - Full Load		2.6/1.3 3.7/1.8		A	115/230 VAC - EMH250 115/230 VAC - EMH350
Inrush Current			40	A	230 VAC cold start, 25 °C
No Load Input Power		5.8 6.4 1.0		W	EMH250 EMH350 EMH350 with output inhibit (via signal option)
Earth Leakage Current		90/160	250	µA	115/230 VAC/50 Hz (Typ.), 264 VAC/60 Hz (Max.)
Input Protection	F10 A/250 V internal fuse in both lines				

Derating Curve - All EMH250 & EMH350 models

Figure 1

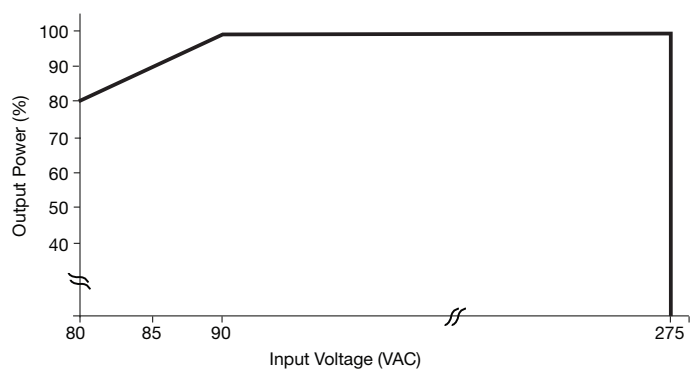

Output Characteristics

Characteristic	Minimum	Typical	Maximum	Units	Notes & Conditions
Output Voltage - V1	12		48	VDC	See Models and Ratings table
Initial Set Accuracy			±1 V1, ±5 V2	%	50% load, 115/230 VAC, V2 EMH350 only
Output Voltage Adjustment	±10 V1			%	Via potentiometer & PMBus control
Minimum Load	0			A	
Start Up Delay		1		s	230 VAC full load (see fig. 2, 3 & 4.)
Hold Up Time		16		ms	115 VAC full load (see fig. 5.)
Drift			±0.2	%	After 20 min warm up
Line Regulation			±0.5	%	90-264 VAC
Load Regulation			±1 V1, ±5 V2	%	0-100% load, V2 EMH350 only
Transient Response - V1			4	%	Recovery within 1% in less than 500 µs for a 50-75% and 75-50% load step
Over/Undershoot - V1		2		%	
Ripple & Noise			1	% pk-pk	20 MHz bandwidth (see fig. 6 & 7.)
Overvoltage Protection	115		140	%	Vnom DC.
Overload Protection	110		150	% I nom	Auto reset, knee point adjustable via PMBus control (see fig.8) EMH350-50 only
Short Circuit Protection					Fitted
Temperature Coefficient			0.05	%/°C	
Overtemperature Protection				°C	Fitted, auto recovery
Patient Leakage Current			100	µA	264 VAC/60 Hz

Start up delay from AC turn on

Figure 2
V1 Start up example
(115 VAC, 686 ms)

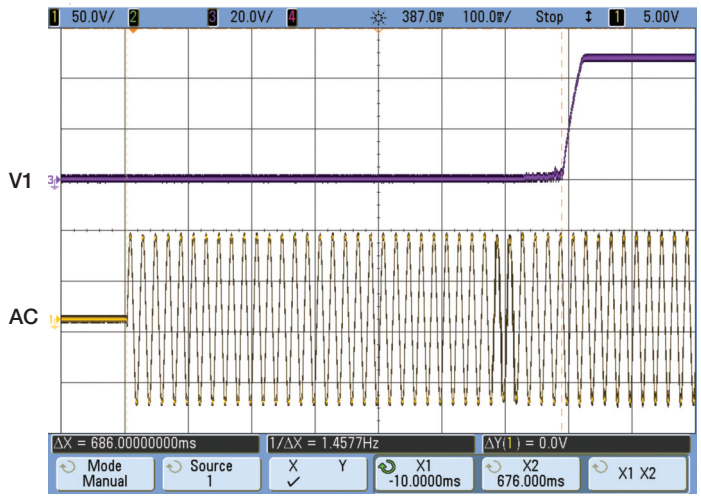

Figure 3
V3 Fan supply example
(115 VAC, 530 ms)

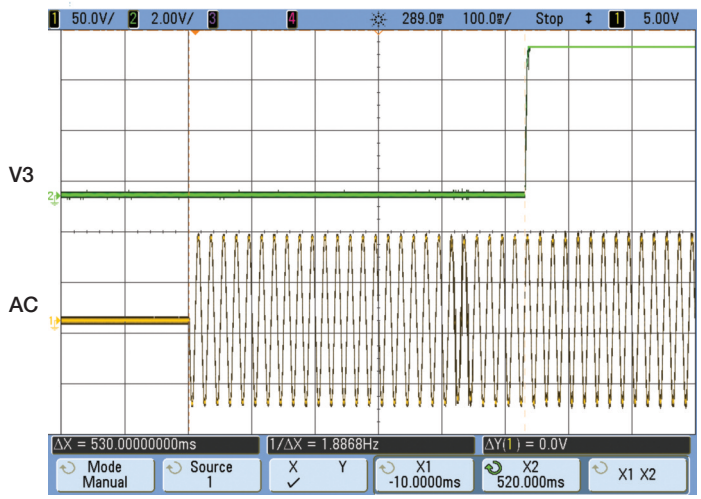

Output Characteristics

Figure 4
V2 Standby Supply example
(115 VAC, 75 ms)

EMH350 only

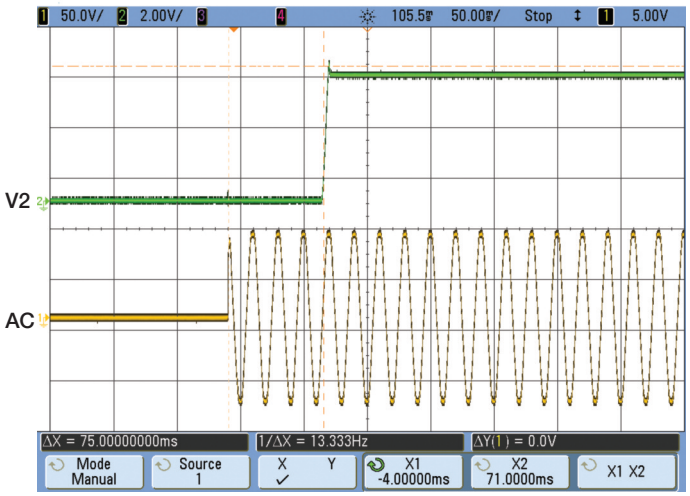

Hold up time from loss of AC

Figure 5
V1 Hold up time example
(115 VAC, 22 ms)

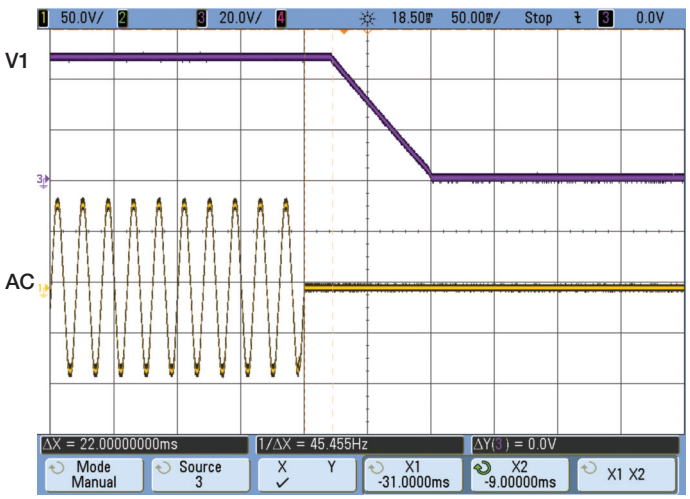

Output Ripple & Noise

Figure 6
EMH350PS12, 350 W, (87 mV pk-pk ripple, 20 MHz bandwidth)

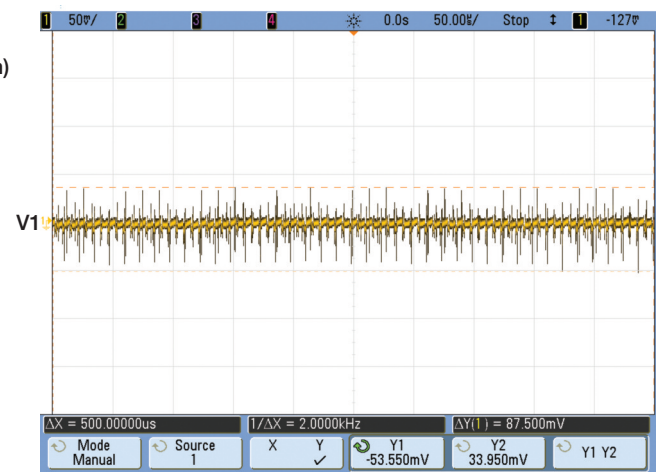

Output Characteristics

Figure 7
EMH350PS24 350 W (85 mV pk-pk ripple, 20 MHz bandwidth)

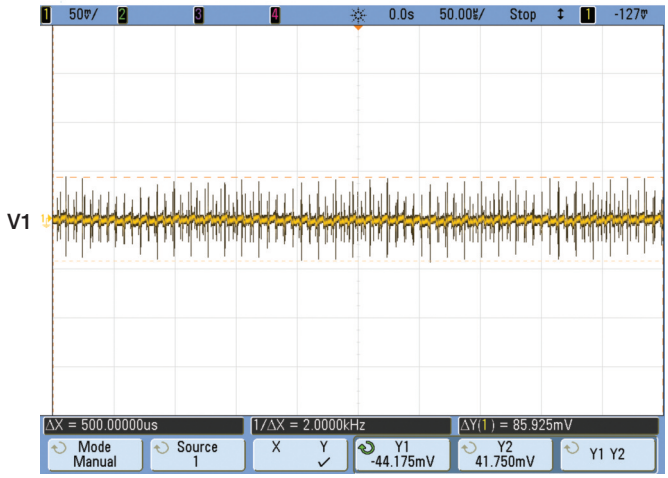

Overload Characteristics

Figure 8
Typical Overload Characteristics (EMH350PS12 shown)

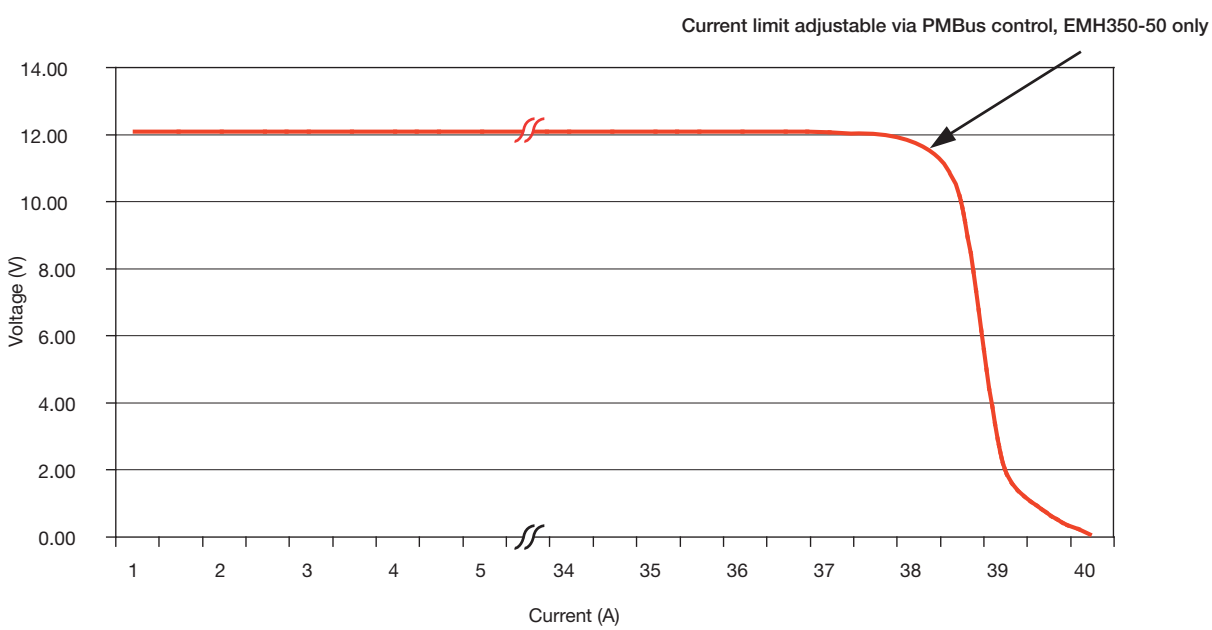

General Specifications

Characteristic	Minimum	Typical	Maximum	Units	Notes & Conditions
Efficiency		87		%	Full load (see fig. 9 & 10)
Isolation: Input to Output	4000			VAC	
Input to Ground	1500			VAC	
Output to Ground	1500			VAC	
Switching Frequency		62-560 / 71 / 50-130		kHz	PFC / Main Converter / Standby Converter
Power Density			16.3	W/in³	
Mean Time Between Failure		400		kHrs	MIL-HDBK-217F, Notice 2 +25 °C GB
Weight		0.9 (410) 1.0 (450)		lbs (g)	EMH250 & EMH350, EMH350D

Efficiency Versus Load

Figure 9
EMH350PS12

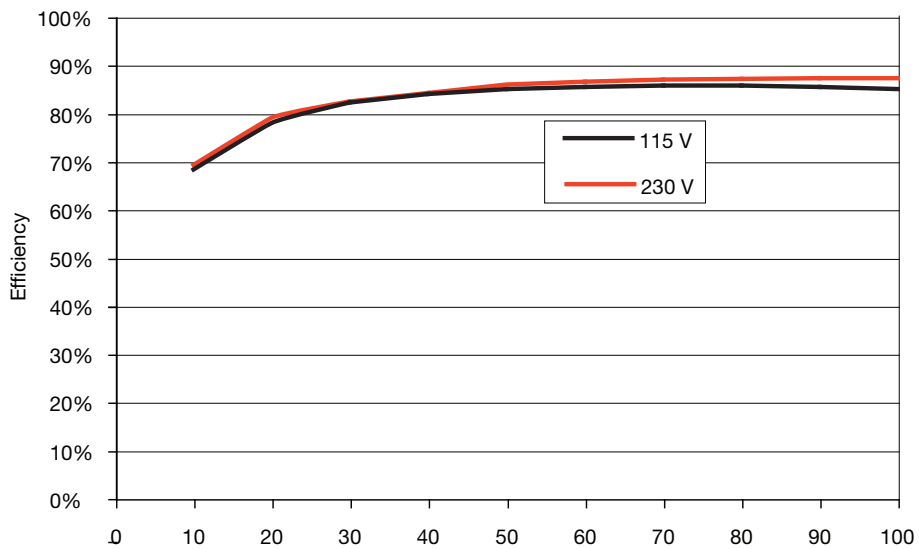

Figure 10
EMH350PS48

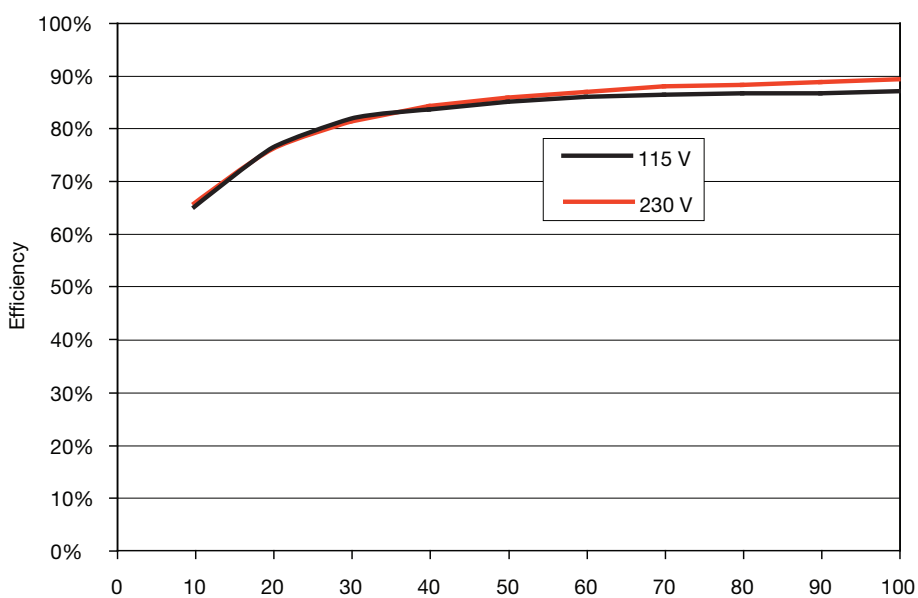

Environmental

Characteristic	Minimum	Typical	Maximum	Units	Notes & Conditions
Operating Temperature	0		+70	°C	Derate linearly from +50 °C at 2.5%/°C to 50% at 70 °C. (See Thermal Considerations)
Storage Temperature	-40		+85	°C	
Cooling	12			CFM	Forced-cooled, see Thermal Considerations & Mechanical details
Humidity	5		95	%RH	Non-condensing
Operating Altitude			3000	m	
Shock					3 x 30 g/11 ms shocks in both +ve & -ve directions along the 3 orthogonal axis, total 18 shocks.
Vibration					Three axis 5-500 Hz at 2 g x 10 sweeps

Electromagnetic Compatibility - Emissions

Phenomenon	Standard	Test Level	Criteria	Notes & Conditions
Conducted	EN55011/22	Class B		
Radiated	EN55011/22	Class A		See EMC report
Voltage Fluctuations	EN61000-3-3			

Electromagnetic Compatibility - Immunity

Phenomenon	Standard	Test Level	Criteria	Notes & Conditions
Low Voltage PSU EMC	EN61204-3	High severity level	as below	
Harmonic Current	EN61000-3-2	Class A		
Radiated	EN61000-4-3	3	A	
EFT	EN61000-4-4	3	A	
Surges	EN61000-4-5	Installation class 3	A	
Conducted	EN61000-4-6	3	A	
Dips and Interruptions	EN61000-4-11	Dip: 30% 10 ms	A	
		Dip: 60% 100 ms	B	
		Dip: 100% 5000 ms	B	
	EN60601-1-2 (EN61000-4-11)	Dip: 30% 500 ms	A	
		Dip: 60% 100 ms	A	Requires load derating to approx 50% with 100 VAC input.
		Dip: 100% 10 ms	A	
		Int.: >95% 5000 ms	B	

Safety Agency Approvals

Safety Agency	Safety Standard	Category
CB Report	UL Cert #US/TBA/UL, IEC60950-1:2005 Ed 2	Information Technology
UL	UL File # E139109-AXX-UL, UL60950-1 (2007), CSA 22.2 No.60950-1-07 Ed 2	Information Technology
TUV	TUV Certificate # TBA, EN60950-1:2006	Information Technology
CE	LVD	

Safety Agency	Safety Standard	Category
CB Report	Certificate #US/18274/UL, IEC60601-1 Ed 3 Including Risk Management	Medical
UL	UL File # E146893, ANSI/AAMI ES 60601-1:2005 & CSA C22.2 No. 60601-1:08	Medical
TUV	TUV EN60601-1:2006	Medical

Means of Protection		Category
Primary to Secondary	2 x MOPP (Means of Patient Protection)	IEC60601-1 Ed 3
Primary to Earth	1 x MOPP (Means of Patient Protection)	
Secondary to Earth	1 x MOPP (Means of Patient Protection)	

Equipment Protection Class	Safety Standard	Notes & Conditions
Class I & BF	IEC60950-1:2005 Ed 2 & IEC60601-1 Ed 3	See safety agency conditions of acceptability for details

Signals

Model	Signal Functions Available								Optional Cover Availability	
	Remote Sense	Fan Supply	5 V Standby	AC OK/Power Fail	Inhibit V1 & V Fan	Current Share	Variable Speed Fan Control	PMBus	Standard Top Fan (-TF)	Variable Speed Top Fan (-VF)
EMH250PSXX	✓	✓							✓	
EMH350PSXX	✓	✓	✓						✓	
EMH350PSXX-01	✓	✓	✓	✓	✓	✓			✓	
EMH350PSXX-02	✓	✓	✓	✓	✓	✓	✓			✓
EMH350PSXX-50	✓	✓	✓					✓	✓	
EMH350PSXXD	✓	✓	✓							
EMH350PSXXD-01	✓	✓	✓	✓	✓	✓				
EMH350PSXXD-50	✓	✓	✓					✓		

Characteristic	Notes & Conditions
Signals & Control	
Remote Sense	Compensates for 0.5 V total voltage drop
12 V Fan Supply (V3)	12 V/0.6 A supply, present when AC supplied, inhibit turns fan supply off.
5V Standby (V2)	5 V/2 A supply, always present when AC supplied
AC OK/Power Fail	AC OK is an open collector transistor, referenced to negative output, providing a minimum of 3 ms warning of loss of output regulation. The transistor is normally on when AC is healthy. See fig. 11.
Inhibit	The inhibit high pin should be pulled below 0.4 V to switch V1 & V Fan (V3) off. Open circuit or 2-8 V maximum to switch the output on. See fig.12.
Current Share	Connecting pin 9 (-01 & -02 models) of like voltage units (3 maximum) will force the current to share between the outputs. Units share current within 10% of each other at full load. See fig. 13.
Variable Speed Fan Control	When used in conjuction with -VF fan cover, varies the speed of the internal fan depending on temperature of the unit. See fig. 15.
I²C/PMBus	The I²C PMBus compatible interface can be used for monitoring the unit output voltage, current, internal temperature, external 3 wire TACHO fan and run time. Adjustment of the output voltage and current limit set point and identification of the unit model number and serial number are also possible. Consult sales for further information and application notes.

AC OK Power Fail

Figure 11

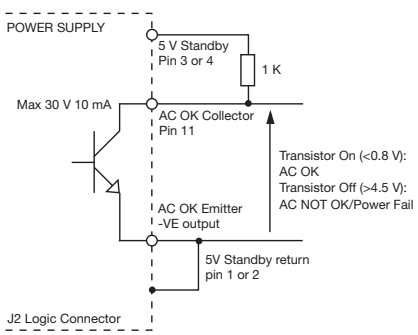

Inhibit

Figure 12

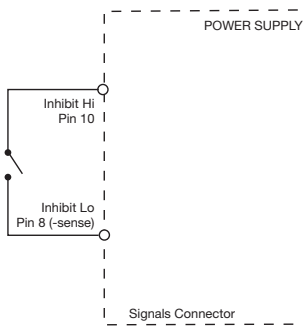

Parallel & Current Share

(EMH350 recommended connection)

Figure 13

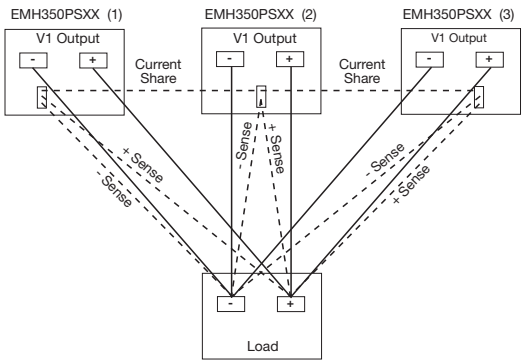

Signals

Redundancy N+1

(EMH350 recommended connection)

Figure 14

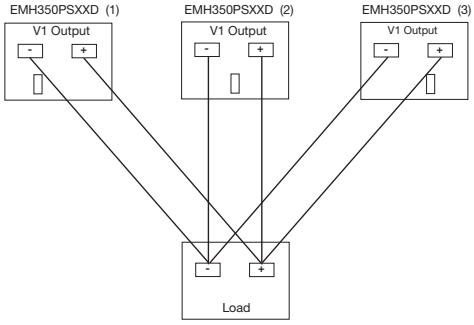

Fan Speed Graph

Figure 15

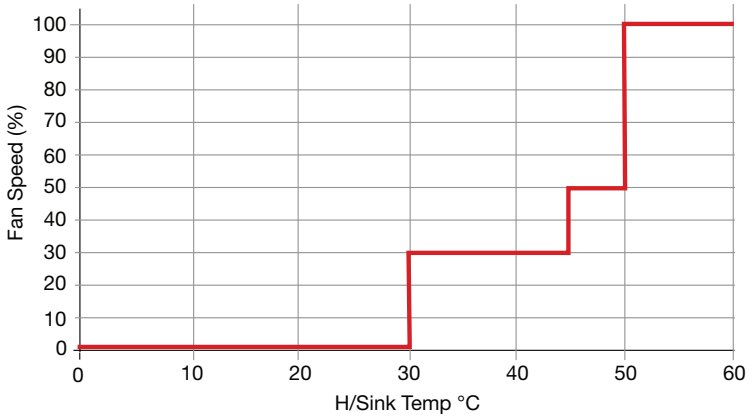

Mechanical Details

EMH250

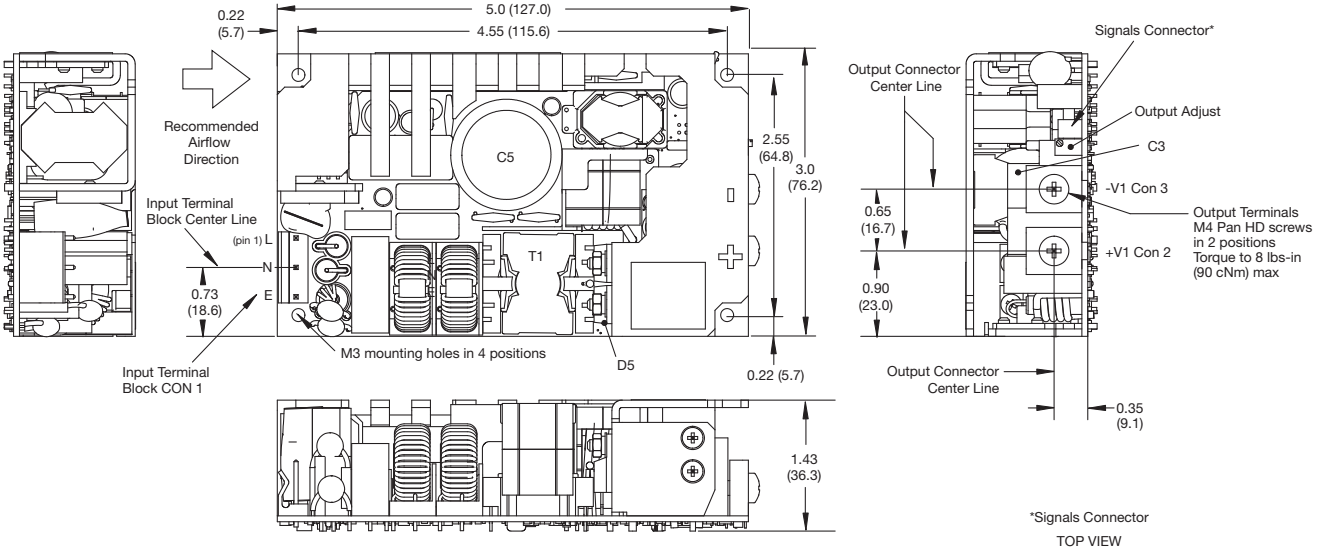

Input Connector CON 1 TYCO part # 640445-5	
Pin 1	Line
Pin 3	Neutral
Pin 5	Earth

Output Connector	
Con 2	+V1
Con 3	-V1

*Signals Connector

TOP VIEW

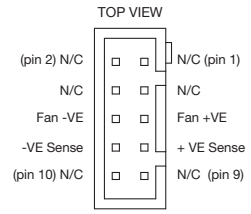

Signals Connector 10 way 2 mm pitch p/n JST BI0B-PHDSS
Mating Half - p/n JST PHDR-10VS,
Contact- 26-22 AWG p/n JST SPHD-001T-P0.5

Pin 2 & 4 removed

Mates with Tyco SL-156 Series Connector

Notes

1. Dimensions shown in inches (mm).
   Tolerance: ±0.02 (±0.5)
2. Weight: 0.90 lb (410 g).

Mechanical Details

EMH350

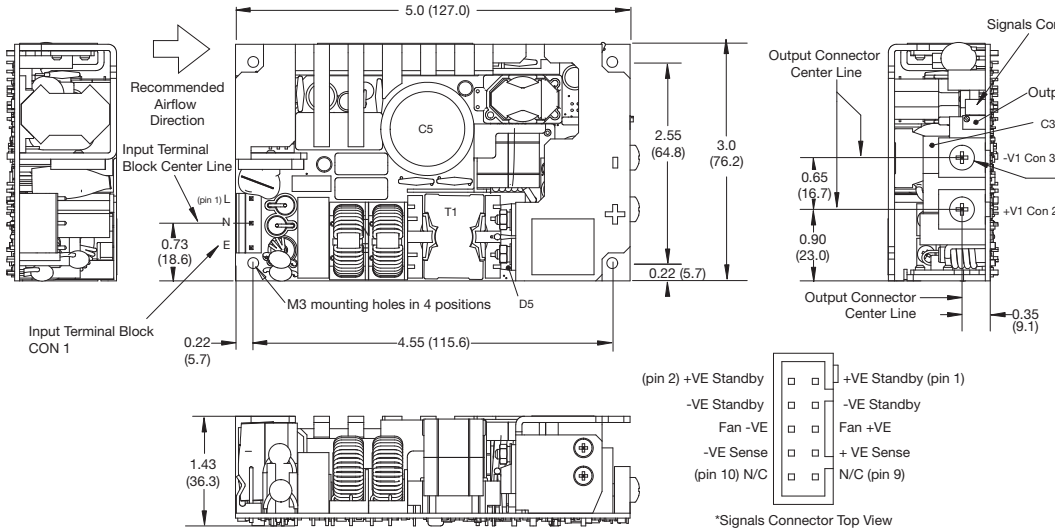

*Signals Connector Top View
Signals Connector 10 way 2 mm pitch p/n JST BI0B-PHDSS
Mating Half - p/n JST PHDR-10VS,
Contact- 26-22 AWG p/n JST SPHD-001T-P0.5

Output Connector	
CON 2	+V1
CON 3	-V1

Input Connector CON 1 TYCO part # 640445-5	
1	Line
3	Neutral
5	Earth

Pins 2 & 4 removed

Mates with Tyco SL-156 Series Connector

EMH350 (Signal Options)

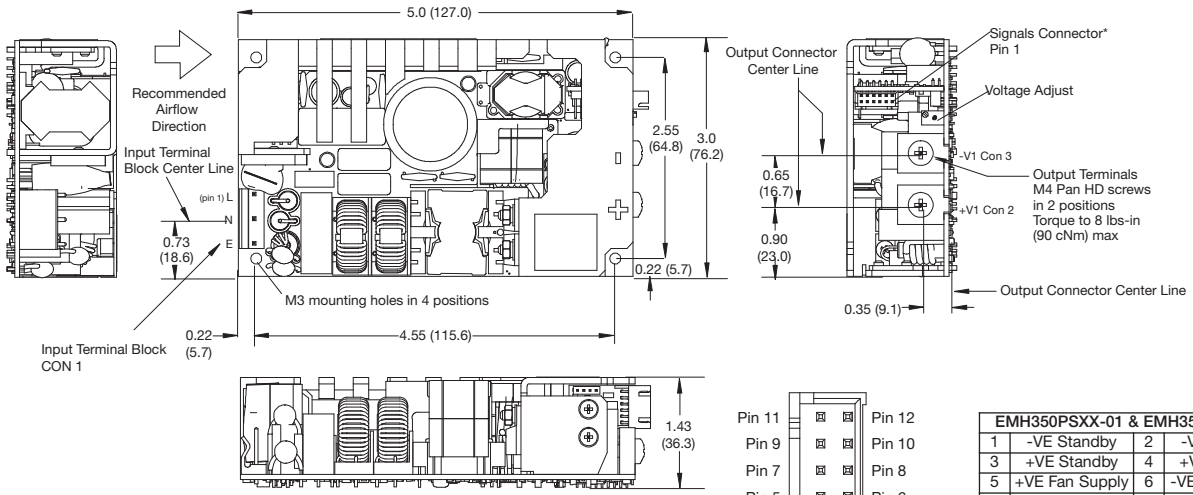

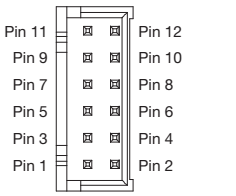

Signals Connector 12 way 2 mm pitch p/n JST S12B-PHDSS
Mating Half - p/n JST PHDR-12VS,
Contact- 26-22 AWG p/n JST SPHD-001T-P0.5

EMH350PSXX-01 & EMH350PSXX-02			
1	-VE Standby	2	-VE Standby
3	+VE Standby	4	+VE Standby
5	+VE Fan Supply	6	-VE Fan Supply
7	+VE Sense	8	-VE Sense
9	Current Share	10	Inhibit
11	Power Fail	12	N/C

EMH350PSXX-50			
1	-VE Standby	2	-VE Standby
3	+VE Standby	4	+VE Standby
5	+VE Fan Supply	6	-VE Fan Supply
7	+VE Sense	8	-VE Sense
9	Fan Tacho Input	10	I²C GND
11	I²C Data	12	I²C Clock

Notes

1. Dimensions shown in inches (mm). Tolerance: ±0.02 (±0.5)
2. Weight: 0.9 lb (410 g).

Mechanical Details

EMH350D

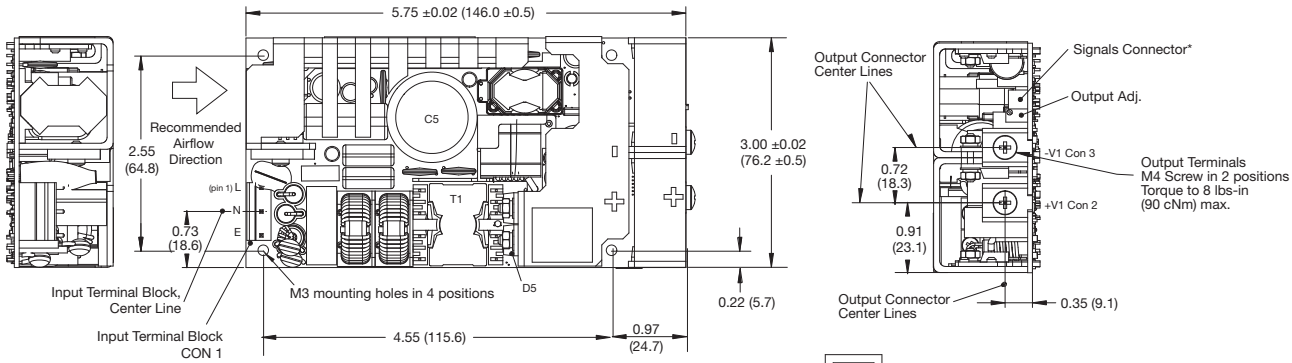

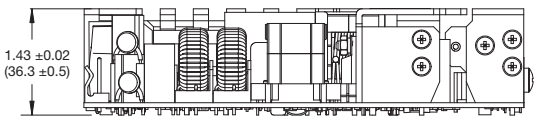

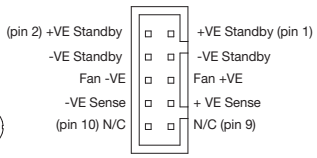

*Signals Connector Top View
Signals Connector 10 way 2 mm pitch part number JST B10B-PHDSS,
Mating half part number JST PHDR-10VS,
Contact 26-22 AWG part number JST SPHD-001T-P0.5

Output Connector	
CON 2	+V1
CON 3	-V1

Input Connector CON 1 TYCO part # 640445-5	
1	Line
3	Neutral
5	Earth

Pins 2 & 4 removed

Mates with Tyco SL-156 Series Connector

EMH350D (Signal Options)

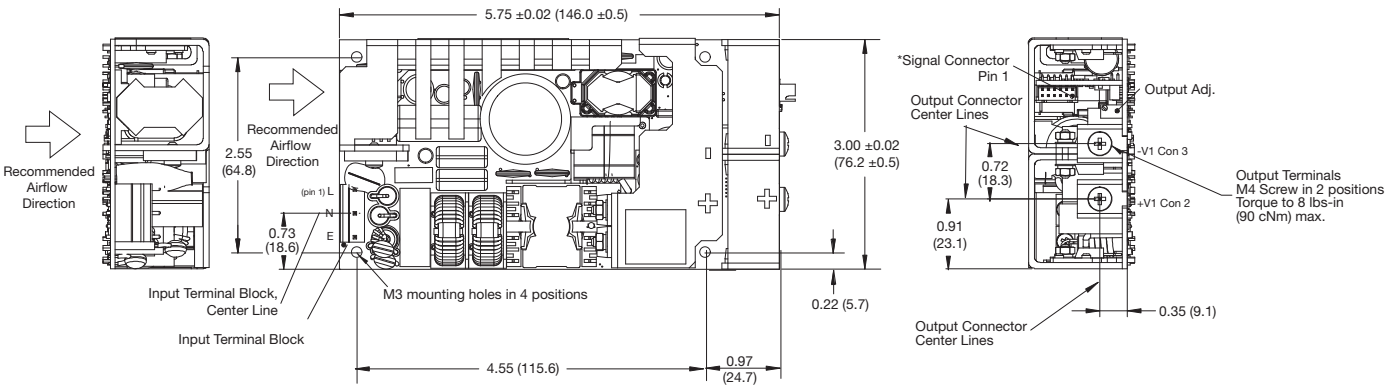

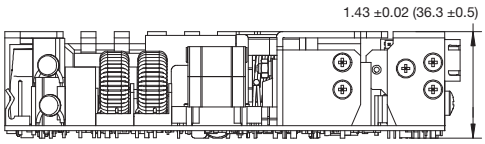

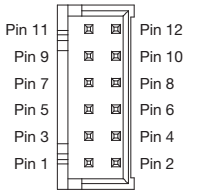

Signals Connector 12 way 2 mm pitch p/n JST S12B-PHDSS
Mating Half - p/n JST PHDR-12VS,
Contact- 26-22 AWG p/n JST SPHD-001T-P0.5

EMH350PSXXD-01			
1	-VE Standby	2	-VE Standby
3	+VE Standby	4	+VE Standby
5	+VE Fan Supply	6	-VE Fan Supply
7	+VE Sense	8	-VE Sense
9	Current Share	10	Inhibit
11	Power Fail	12	N/C

EMH350PSXXD-50			
1	-VE Standby	2	-VE Standby
3	+VE Standby	4	+VE Standby
5	+VE Fan Supply	6	-VE Fan Supply
7	+VE Sense	8	-VE Sense
9	Fan Tacho Input	10	I^2C GND
11	I^2C Data	12	I^2C Clock

Notes

1. Dimensions shown in inches (mm). Tolerance: ±0.02 (±0.5)
2. Weight: 1.0 lbs (450 g).

Mechanical Details

Top Fan - EMH250-TF & EMH350-TF

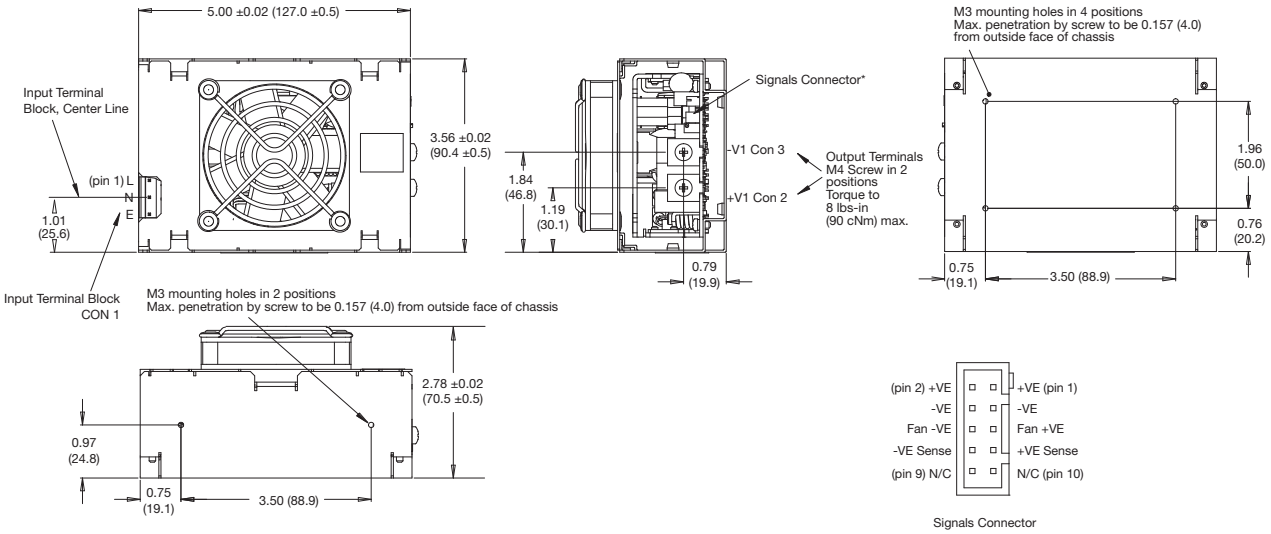

Top Fan with Signals Options - EMH350-01TF, EMH350-50TF & EMH350-02VF

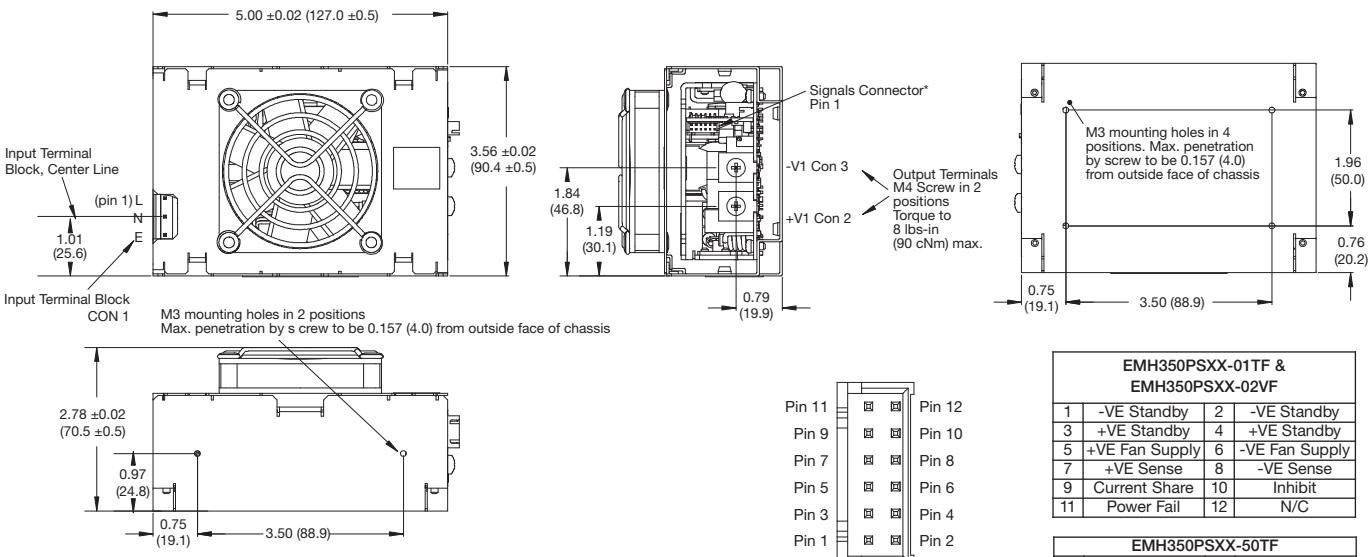

EMH350PSXX-01TF & EMH350PSXX-02VF			
1	-VE Standby	2	-VE Standby
3	+VE Standby	4	+VE Standby
5	+VE Fan Supply	6	-VE Fan Supply
7	+VE Sense	8	-VE Sense
9	Current Share	10	Inhibit
11	Power Fail	12	N/C

EMH350PSXX-50TF			
1	-VE Standby	2	-VE Standby
3	+VE Standby	4	+VE Standby
5	+VE Fan Supply	6	-VE Fan Supply
7	+VE Sense	8	-VE Sense
9	Fan Tacho Input	10	I²C GND
11	I²C Data	12	I²C Clock

Notes

1. Dimensions shown in inches (mm). Tolerance: ±0.02 (±0.5)
2. Weight: 1.67 lbs (760 g).

Thermal Considerations

In order to ensure safe operation of the PSU in the end-use equipment, the temperature of the components listed in the table below must not be exceeded. Temperature should be monitored using K type thermocouples placed on the hottest part of the component (out of any direct air flow). See mechanical drawings for component locations.

The service life of the power supply is largely determined by the temperature of the electrolytic capacitors during normal operation and therefore to achieve the optimum lifetime, it is recommended to reduce the temperatures shown by approximately 30 °C.

Temperature Measurements (Ambient ≤ 50 °C)	
Component	**Max Temperature ºC**
D5 case	110 °C
C5	105 °C
C3	105 °C
T1 coil	120 °C

Service Life (U Channel Versions)

The estimated service life of the EMH Dual Series is determined by the cooling arrangements and load conditions experienced in the end application. Due to the uncertain nature of the end application this estimated service life is based on the actual measured temperature of a key capacitor within the product when installed in the end application.

The graph below expresses the estimated lifetime for a given component temperature and assumes continuous operation at this temperature.

Estimated Service Life vs Component Temperature

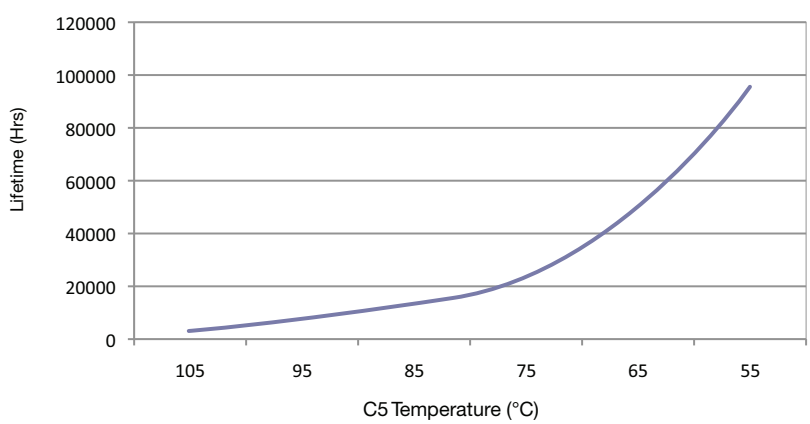

EMH Dual Output Series

- 350 W Forced–Cooled Dual Output
- Industry Standard 4”x 6”x 1.43”Format
- IT & Medical (BF) Approvals
- 80 V – 275 VAC Operation
- Analog & PMBus Signals Options (EMH350)
- 5 V Standby
- Outputs upto 120 VDC
- 3 Year Warranty

The EMH350 Dual Output series provides two high current outputs in a industry standard 6" x 4" footprint. Available both in U channel and integrally cooled end fan versions the EMH dual series can be fitted into 1U and configured to provide single outputs upto 120 VDC.

All models feature two isolated outputs, plus and additional 12V/0.6A fan supply and 5V/2A standby supply complimented with a range of optional analogue, digital and PMBus signals and controls.

With safety approvals that cover both IEC60950 (IT) and IEC60601 BF (Medical) the EMH350 dual series is suitable for a wide range of industrial and medical applications including patient contact.

Models & Ratings

Output Voltage V1	Output Current V1	Output Voltage V2	Output Current V2	Standby Supply	Fan Supply V3	Maximum Output Power	Model Number[1]
12 V	16.5 A	24 V	8.3 A	5.0 V/2.0 A	12 V/0.6 A	354 W	EMH350PD21-U
12 V	16.5 A	36 V	5.5 A	5.0 V/2.0 A	12 V/0.6 A	354 W	EMH350PD22-U
12 V	16.5 A	48 V	4.2 A	5.0 V/2.0 A	12 V/0.6 A	355 W	EMH350PD23-U
24 V	8.3 A	48 V	4.2 A	5.0 V/2.0 A	12 V/0.6 A	354 W	EMH350PD24-U
60 V	3.3 A	60 V	3.3 A	5.0 V/2.0 A	12 V/0.6 A	354 W	EMH350PD25-U

Notes:
1. For integral end fan version, replace '-U' in model number with '- EF'
2. Output voltages to 120 VDC possible with series output connection contact sales.

Input Characteristics

Characteristic	Minimum	Typical	Maximum	Units	Notes & Conditions
Input Voltage - Operating	80	115/230	275	VAC	Derate output power < 90 VAC. See fig. 1
Input Frequency	47	50/60	63	Hz	
Power Factor		>0.9			EN61000-3-2 class A compliant
Input Current - No Load		0.05/0.03		A	115/230 VAC
Input Current - Full Load		3.6/1.8		A	115/230 VAC - EMH350
Inrush Current			40	A	230 VAC cold start, 25 °C
No Load Input Power		1.0		W	With output inhibit (via signal option)
Earth Leakage Current		90/160	250	µA	115/230 VAC/50 Hz (Typ.), 264 VAC/60 Hz (Max.)
Input Protection	F10 A/250 V internal fuse in both lines				

Input Voltage - Derating Curve

Figure 1

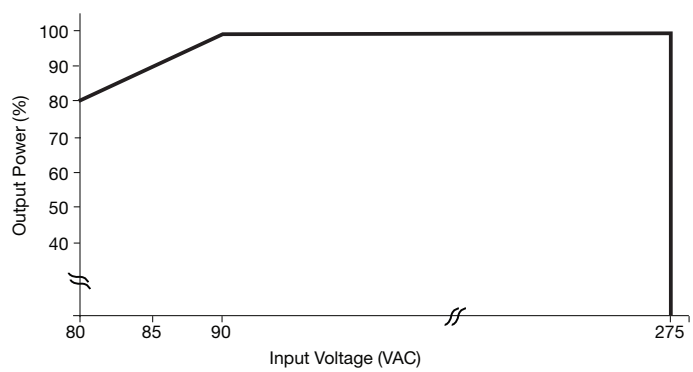

Output Characteristics

Characteristic	Minimum	Typical	Maximum	Units	Notes & Conditions
Output Voltage - V1	12		120	VDC	See Models and Ratings table
Initial Set Accuracy			±1 V1, ±5 V2	%	50% load, 115/230 VAC
Output Voltage Adjustment	±10 V1			%	Via potentiometer & PMBus control, V2 will track
Minimum Load	0			A	
Start Up Delay		1		s	230 VAC full load (see fig. 2, 3 & 4.)
Hold Up Time		16		ms	115 VAC full load (see fig. 5.)
Drift			±0.2	%	After 20 min warm up
Line Regulation			±0.5	%	90-264 VAC
Load Regulation			±1 V1, ±5 V2	%	0-100% load, V2 EMH350 only
Cross Regulation					See regulation curves (see fig. 2-5)
Transient Response - V1			4	%	Recovery within 1% in less than 500 µs for a 50-75% and 75-50% load step
Over/Undershoot - V1		2		%	
Ripple & Noise			1	% pk-pk	20 MHz bandwidth (see fig. 6 & 7.)
Overvoltage Protection	115		140	%	Vnom DC.
Overload Protection	110		150	% W	Primary power limit V1 & V2 output power combined. (see fig. 6)
Short Circuit Protection					Continuous
Temperature Coefficient			0.05	%/°C	
Overtemperature Protection				°C	Fitted, auto recovery
Patient Leakage Current			100	µA	264 VAC/60 Hz

Regulation Curves

Figure 2 - EMH350PD21

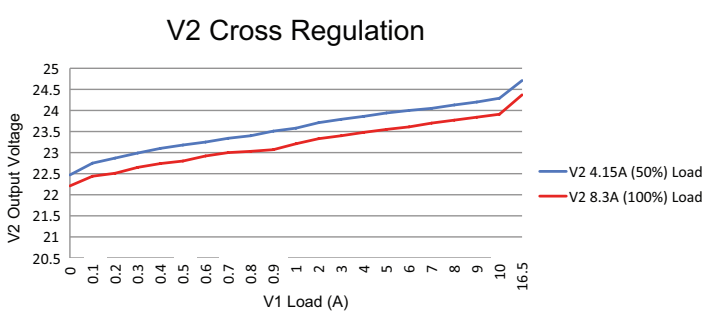

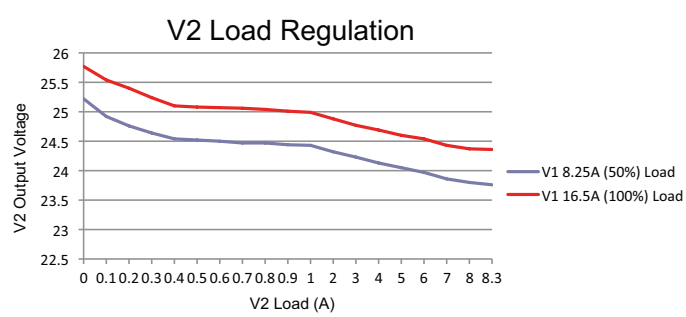

Figure 3 - EMH350PD22

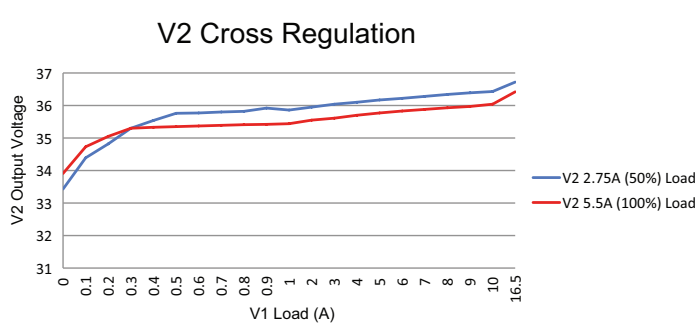

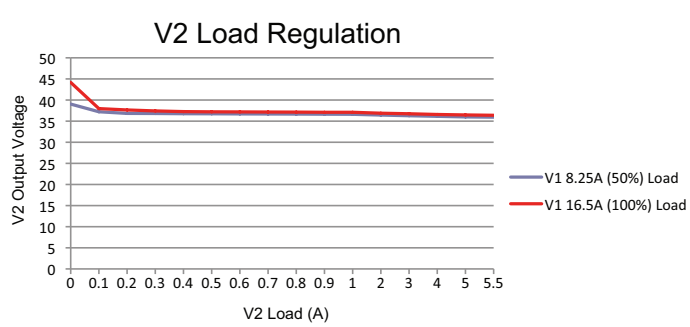

Regulation Curves

Figure 4 - EMH350PD23

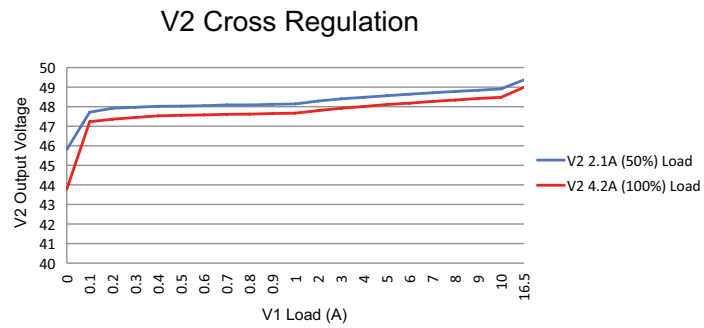

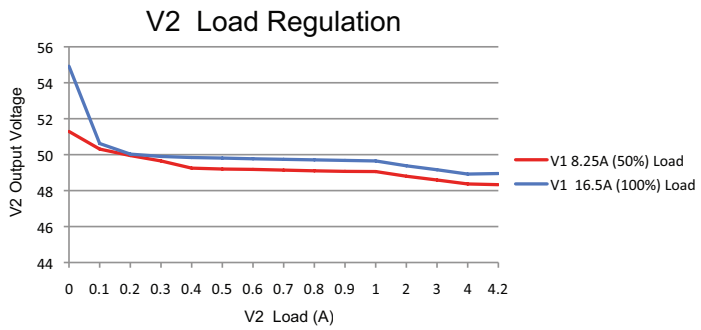

Figure 5 - EMH350PD24

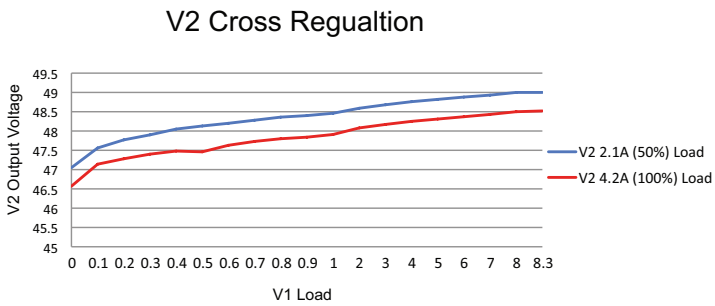

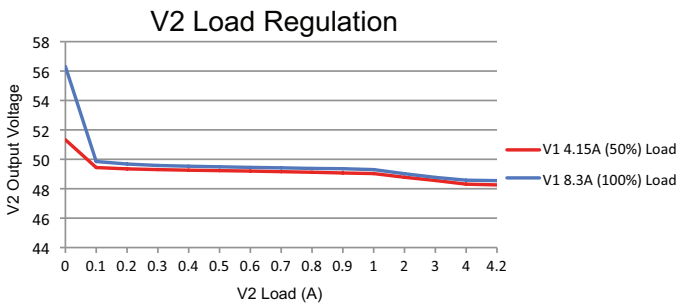

Overload Characteristics

Figure 6
Typical Overload Characteristics

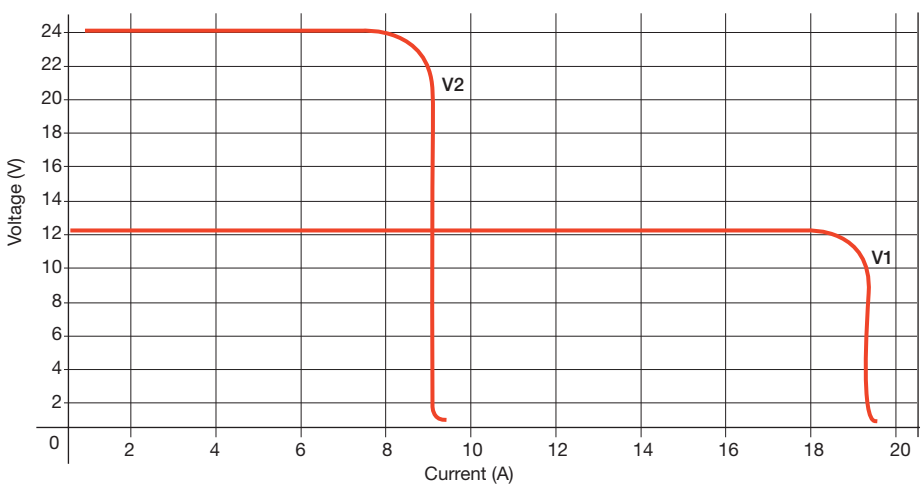

General Specifications

Characteristic	Minimum	Typical	Maximum	Units	Notes & Conditions
Efficiency		87		%	Full load (see fig. 7)
Isolation: Input to Output	4000			VAC	
Input to Ground	1500				
Output to Ground	1500				
V1 to V2 Output	80			VDC	
Switching Frequency		62-560 / 71 / 50-130		kHz	PFC / Main Converter / Standby Converter
Power Density			16.3	W/in³	
Mean Time Between Failure		400		kHrs	MIL-HDBK-217F, Notice 2 +25 °C GB
Weight		1.6 (730)		lbs (g)	U Models
		2.2 (1003)			EF Models

Efficiency Versus Load

Figure 7
EMH350PD21

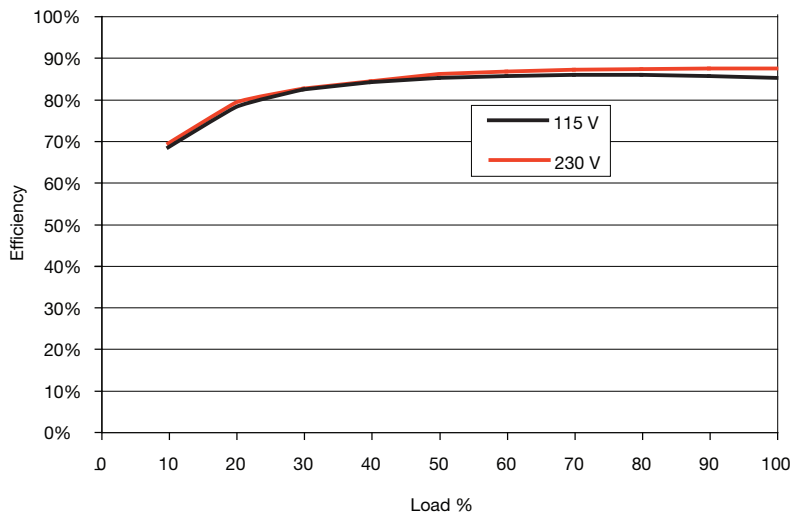

Environmental

Characteristic	Minimum	Typical	Maximum	Units	Notes & Conditions
Operating Temperature	0		+70	°C	Derate linearly from +50 °C at 2.5%/°C to 50% at 70 °C. (See Thermal Considerations)
Storage Temperature	-40		+85	°C	
Cooling	16			CFM	Forced-cooled, see Thermal Considerations & Mechanical details
Humidity	5		95	%RH	Non-condensing
Operating Altitude			3048	m	
Shock					±3 x 30g shocks in each plane, total 18 shocks. 30g = 11ms (+/-0.5msec), half sine. Conforms to EN60068-2-27 & EN60068-2-47
Vibration					Single axis 10 - 500 Hz at 2g sweep and endurance at resonance in all 3 planes. Conforms to EN60068-2-6

Electromagnetic Compatibility - Emissions

Phenomenon	Standard	Test Level	Criteria	Notes & Conditions
Conducted	EN55011/22	Class B		
Radiated	EN55011/22	Class A		AC input cable fitted with Würth Electronik ferrrite core (3 turns), Part No.742-700-56. See EMC report for details.
Voltage Fluctuations	EN61000-3-3			

Electromagnetic Compatibility - Immunity

Phenomenon	Standard	Test Level	Criteria	Notes & Conditions
Low Voltage PSU EMC	EN61204-3	High severity level	as below	
Harmonic Current	EN61000-3-2	Class A		
Radiated	EN61000-4-3	3	A	
EFT	EN61000-4-4	3	A	
Surges	EN61000-4-5	Installation class 3	A	
Conducted	EN61000-4-6	3	A	
Dips and Interruptions	EN55024 (100 VAC)	Dip >95% (0 VAC), 8.3ms	B	
		Dip 30% (70 VAC), 416ms	B	
		Dip >95% (0 VAC), 4160ms	B	
	EN55024 (240 VAC)	Dip >95% (0 VAC), 10.0ms	B	
		Dip 30% (168 VAC), 500ms	B	
		Dip >95% (0 VAC), 5000ms	B	
	EN60601-1-2 (100 VAC)	Dip >95% (0 VAC), 10.0ms	A	
		Dip 60% (40 VAC), 100ms	A	Derate Output Power to 140 W
		Dip 30% (70 VAC), 500ms	A	
		Dip >95% (0 VAC), 5000ms	B	
	EN60601-1-2 (240 VAC)	Dip >95% (0 VAC), 10.0ms	A	
		Dip 60% (96 VAC), 100ms	A	
		Dip 30% (168 VAC), 500ms	A	
		Dip >95% (0 VAC), 5000ms	B	

Safety Agency Approvals

Safety Agency	Safety Standard	Category
CB Report	UL, IEC60950-1:2005 Ed 2	Information Technology
UL	UL60950-1 (2007), CSA 22.2 No.60950-1-07 Ed 2	Information Technology
TUV	TUV, EN60950-1:2006	Information Technology
CE	LVD & RoHS	

Safety Agency	Safety Standard	Category
CB Report	IEC60601-1 Ed 3 Including Risk Management	Medical
UL	ANSI/AAMI ES 60601-1:2005 & CSA C22.2 No. 60601-1:08	Medical
TUV	EN60601-1:2006	Medical

Means of Protection		Category
Primary to Secondary	2 x MOPP (Means of Patient Protection)	IEC60601-1 Ed 3
Primary to Earth	1 x MOPP (Means of Patient Protection)	
Secondary to Earth	1 x MOPP (Means of Patient Protection)	

Equipment Protection Class	Safety Standard	Notes & Conditions
Class I & BF	IEC60950-1:2005 Ed 2 & IEC60601-1 Ed 3	See safety agency conditions of acceptability for details

Signals Description & Compatibility

Model	Functions							
	Remote Sense	Fan Supply	5 V Standby	AC OK/ Power Fail	Inhibit V1 & V Fan	Current Share	Variable Speed Fan Control	PMBus
EMH350PDxx-U	✓	✓	✓	✓	✓	✓		Contact Sales
EMH350PDxx-EF	✓	✓	✓	✓	✓	✓	✓	

Characteristic	Notes & Conditions
Signals & Control	
Remote Sense	Compensates for 0.5 V total voltage drop
12 V Fan Supply (V3)	12 V/0.6 A supply, present when AC supplied, inhibit turns fan supply off.
5V Standby	5 V/2 A supply, always present when AC supplied
AC OK/Power Fail	AC OK is an open collector transistor, referenced to negative output, providing a minimum of 3 ms warning of loss of output regulation. The transistor is normally on when AC is healthy. See fig. 8.
Inhibit	The inhibit high pin should be pulled below 0.4 V to switch V1 & V Fan (V3) off. Open circuit or 2-8 V maximum to switch the output on. See fig. 9.
Current Share	Connecting pin 9 (-01 & -02 models) of like voltage units (3 maximum) will force the current to share between the outputs. Units share current within 10% of each other at full load. See fig. 10.
Variable Speed Fan Control	Only available for -EF models. Varies the speed of the integral fans depending on input voltage, output power & ambient temperature within the unit.

AC OK Power Fail

Figure 8

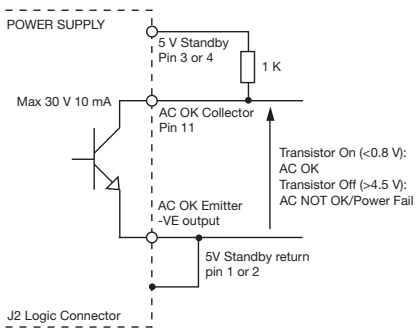

Inhibit

Figure 9

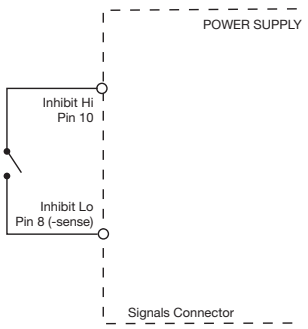

Parallel & Current Share

Figure 10

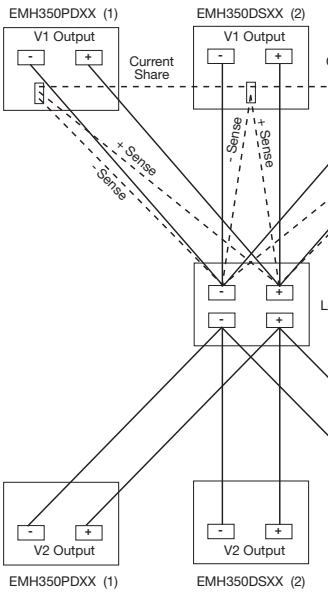

Mechanical Details

EMH350PDxx-U

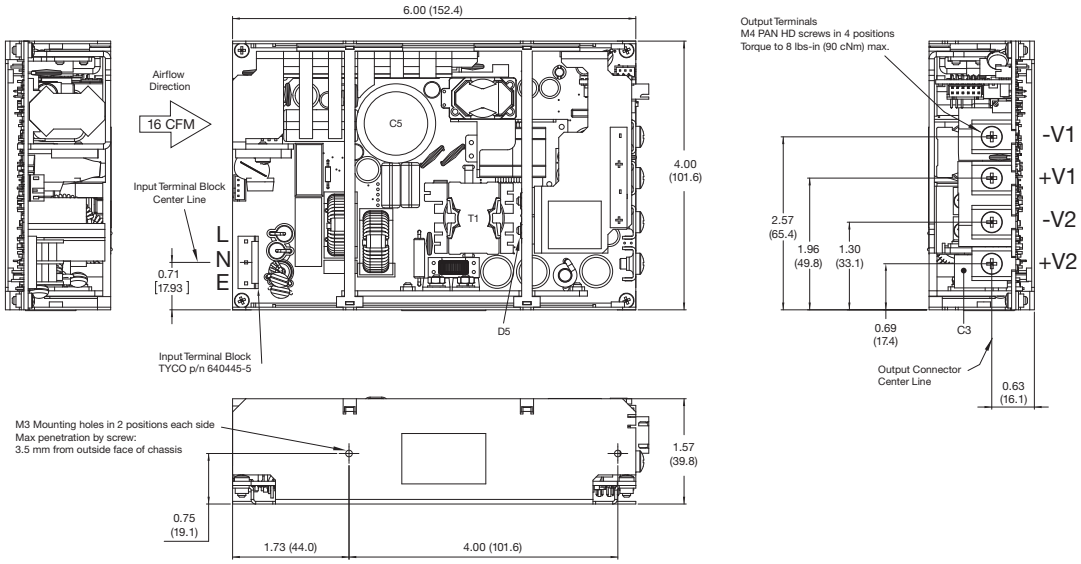

Output Connector	
CON 2	+V1
CON 3	-V1

Input Connector CON 1 TYCO part # 640445-5	
1	Line
3	Neutral
5	Earth

Pins 2 & 4 removed

Mates with Tyco SL-156 Series Connector

EMH350PDxx-EF

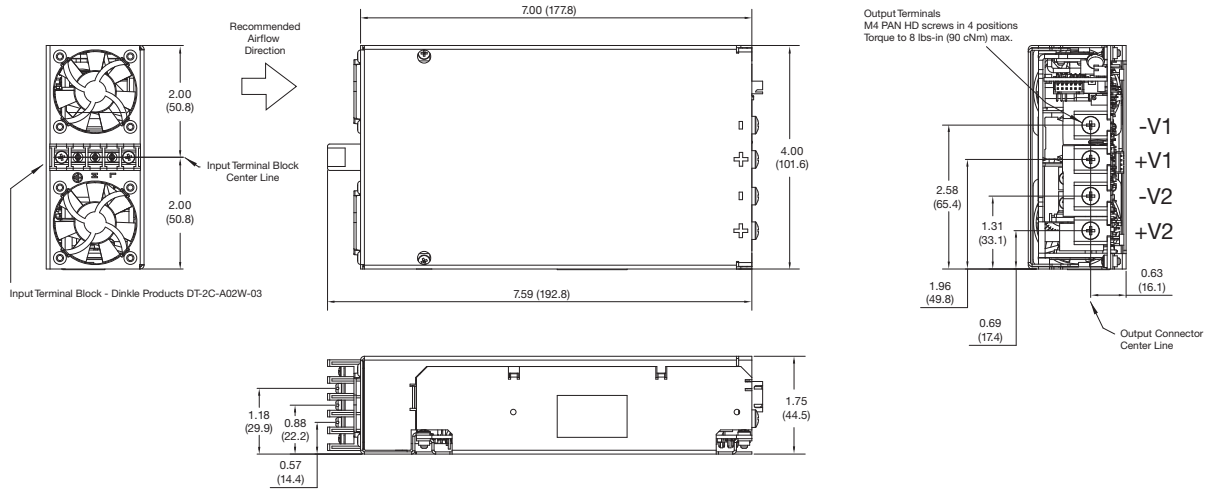

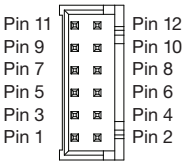

Pin Connections			
Pin	Function	Pin	Function
1	-VE Standby	7	V1 +VE Sense
2	-VE Standby	8	V1 -VE Sense
3	+VE Standby	9	Current Share
4	+VE Standby	10	Inhibit
5	Fan +VE	11	Power Fail
6	Fan -VE	12	Not Connected

Signals Connector - 12 WAY 2mm PITCH p/n JST S12B-PHDSS
Mating HALF - p/n JST PHDR-12VS
Contact - 26-22 AWG p/n JST SPHD-001T-P0.5

Notes

1. Dimensions shown in inches (mm).
   Tolerance: ±0.02 (±0.5)
2. Weight: U channel: 1.6 lb (730 g),
   End Fan: 2.2 lbs (1003 g)

Thermal Considerationse (U Channel Versions)

In order to ensure safe operation of the PSU in the end-use equipment, the temperature of the components listed in the table below must not be exceeded. Temperature should be monitored using K type thermocouples placed on the hottest part of the component (out of any direct air flow). See Mechanical Details for component locations.

Temperature Measurements (Ambient ≤ 50 °C)	
Component	**Max Temperature ºC**
D5 case	120 °C
C5	105 °C
C3	105 °C
T1 coil	120 °C

Service Life (U Channel Versions)

The estimated service life of the EMH Dual Series is determined by the cooling arrangements and load conditions experienced in the end application. Due to the uncertain nature of the end application this estimated service life is based on the actual measured temperature of a key capacitor within the product when installed in the end application.

The graph below expresses the estimated lifetime for a given component temperature and assumes continuous operation at this temperature.
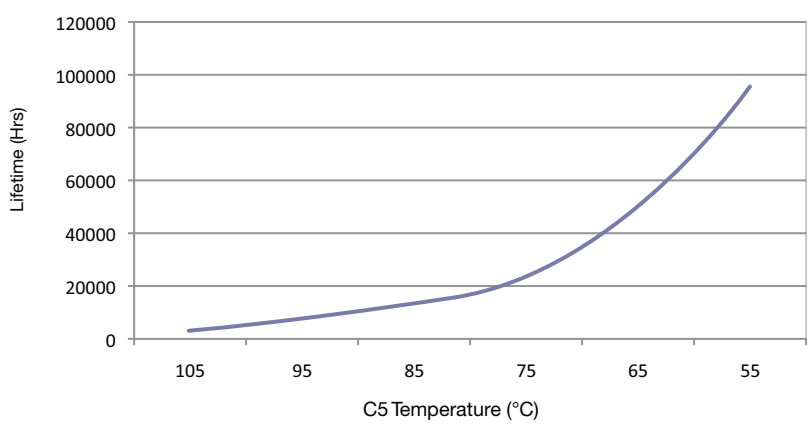
Estimated Service Life vs Component Temperature