640255-1 Product Details

Live Product Chat

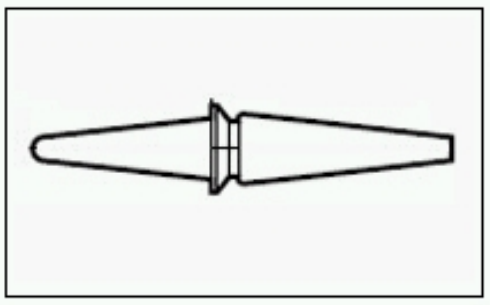

640255-1

TE Part Number: 640255-1
Active
Add to Part List

MTA, CST and SL Accessories

Always EU RoHS/ELV Compliant (Statement of Compliance)

Product Highlights:
- Keying Plug
- Keying Plug Type = Pin
- Without Panel Attachment
- Used For SL-156 Housings

View all Features | Find Similar Products

Quick Links
- Check Pricing & Availability
- Search for Tooling
- Product Feature Selector
- Contact Us About This Product
- Request Samples NEW!

Documentation & Additional Information

Product Drawings:
- sl-156 keying pin, .045 sq. post connector (PDF, English)

Catalog Pages/Data Sheets:
- None Available

Product Specifications:
- None Available

Application Specifications:
- SL 156 Contacts and Housings (PDF, English)
- MTA 156 Ribbon Cable Connector Assemblies (English A... (PDF, English)

Instruction Sheets:
- None Available

CAD Files:
- None Available

List all Documents

Additional Information:
- Product Line Information

Related Products:
- Tooling

Product Features (Please use the Product Drawing for all design activity)

Product Type Features:
- Product Type = Keying Plug
- Keying Plug Type = Pin
- Used For = SL-156 Housings
- Body Material = Nylon 6/6
- Color = Natural
- Comment = Used with staked post.

Mechanical Attachment:
- Panel Attachment = Without

Housing Related Features:
- Housing Flammability Rating = UL 94V-2

Industry Standards:
- RoHS/ELV Compliance = RoHS compliant, ELV compliant
- Lead Free Solder Processes = Not relevant for lead free process
- RoHS/ELV Compliance History = Always was RoHS compliant

Other:
- Brand = AMP

© 2008 Tyco Electronics Corporation All Rights Reserved