Description

The YB1900 is a high side slew rate controlled smart load switch. The slew rate control in YB1900 can effectively avoid the large in-rush current which is commonly observed in normal power switches. Moreover, the level shift in YB1900 allows customers to control 1.8 to 6.5V system with 1.5V logic and without sacrificing leakage current.

The YB1900 has typical low $R_{DS(on)}$ at 100mΩ, it allows large power handling capabilities. And very low quiescent current and fast load discharge make it ideal for power sensitive applications nowadays.

The YB1900 is available in SOT23-5 package with the temperature range valid from -40 to 100 ℃.

Feature

- 1.8 to 6.5V Input Voltage Range
- Slew Rate Limited at 100μs
- Very Low $R_{DS(on)}$, Typically 100mΩ
- Less than 1μA shutdown current
- Output Voltage as low as 0.6V
- Very Low Quiescent Current, Typically 2μA
- Fast shutdown load discharge
- Thermal Fault Protection
- TTL / CMOS Input Logic Level
- 2KV ESD Rating
- EMI Free Circuit
- SOT23-5 Package
- Green Package (RoHS) Available

Applications

- Cellular and Smart Phones
- Hot Swap Supplies
- Microprocessors and DSP Core Supplies
- PDAs
- MP3 Players
- Digital Still and Video Cameras
- Portable Instruments

Typical Application Circuit

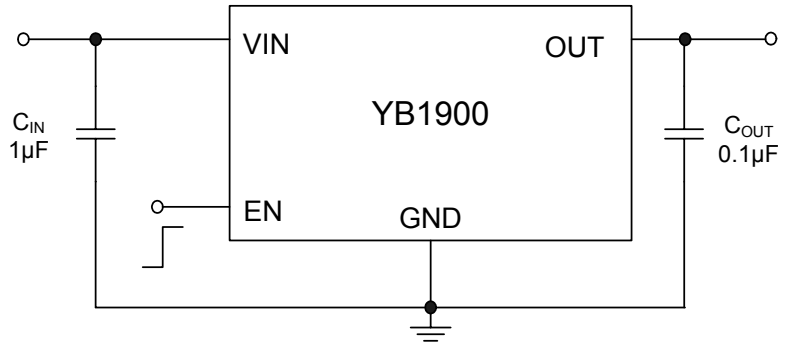

Figure1：Typical Application Circuit

Pin Configuration

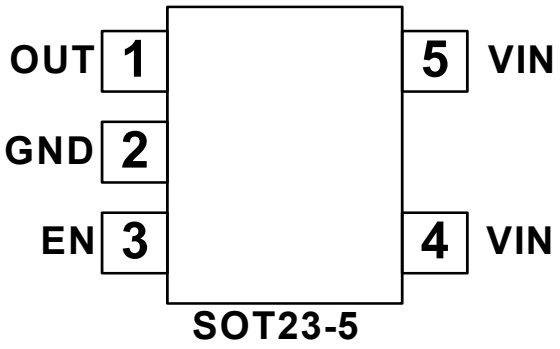

Figure2：YB1900 SOT23-5

Pin Assignment & Description

Table1

Pin	NAME	Function
1	OUT	Drain of P-channel Power MOSFET.
2	GND	Ground Pin. Connect directly to local ground plane.
3	EN	Enable Control Input.
4, 5	VIN	Source of P-channel Power MOSFET.

Ordering Information

Table2

Order Number	Package Type	Supplied as	Package Marking
YB1900ST25	SOT23-5	3000 Units Tape & Reel	Y9A

Absolute Maximum Ratings (note 1)

V_{IN} to GND .....-0.3V to 6.5V
V_{EN} to GND .....-0.3V to 6.5V
OUT to GND .....-0.3V to 6.5V
Maximum Continuous Current..... 2.2A
Junction Temperature..... 150℃
Storage Temperature..... -65℃ to 150℃
Lead Temperature ..... 300℃
ESD HBM 2KV
ESD MM 200V

Recommended Operating Conditions (note 2)

Supply Voltage VIN ..... 1.8 to 6V
Operating Temperature ..... -40℃ to 85℃

Thermal Resistance

θ_{JA} .....220℃ / W

Note: 1. Exceeding these ratings may damage the device.
2. The device is not guaranteed to function outside of its operating conditions.

Electricity Characteristics

Table3 (V_{IN}=5V, V_{EN}=1.5V, T_A=25°C, unless otherwise noted)

Symbol	Description	Test Conditions	Min	TYP	MAX	Units
V_{IN}	Input Voltage		1.8	5	6.5	V
I_Q	Quiescent Current	V_{EN}=1.5V		2	4	μA
I_{SD}	Shutdown Current	V_{EN}=0V, OUT = Open		0.05	1	μA
I_{SO}	Off Switch Current	V_{EN}=0V, V_{OUT} = 0		0.05	1	μA
$R_{DS(ON)}$	On Resistance	V_{IN}=5V @ 100mA		100	130	mΩ
		V_{IN}=4.2V @ 100mA		110	140	
		V_{IN}=3V @ 100mA		130	160	
		V_{IN}=1.8V @ 100mA		200	250	
V_{IL}	EN Input Logic Low	R_{OUT} = 10Ω		0.6	1	V
V_{IH}	EN Input Logic High	R_{OUT} = 10Ω	0.4	0.8		V
I_{SINK}	EN Input Leakage	V_{EN}=5.5V		0.01	1	μA
$T_{D(ON)}$	Output Turn-On Delay	R_{OUT} = 10Ω		40	80	μs
T_{ON}	Output Turn-On Rise Time	R_{OUT} = 10Ω		100	150	μs
$T_{D(OFF)}$	Output Turn-Off Delay	R_{OUT} = 10Ω		4	10	μs
R_{PD}	Output Pull-Down Resistance	V_{EN}=0V		150	250	Ω
T_{SD}	Thermal Shutdown Temperature		140	160	180	℃
T_R	Thermal Recovery Temperature		120	140	160	℃

Note:

Typical Performance Characteristics

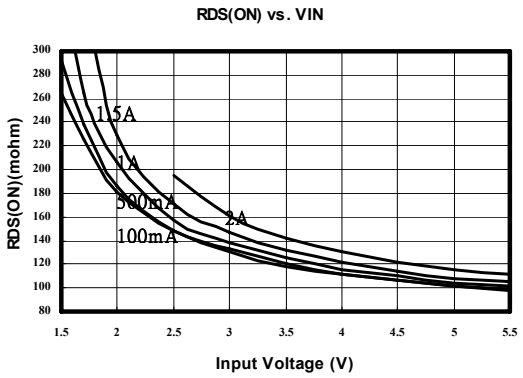

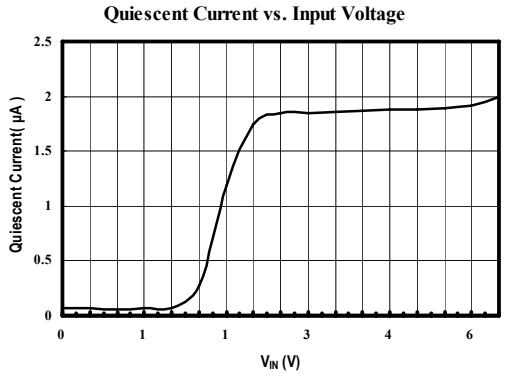

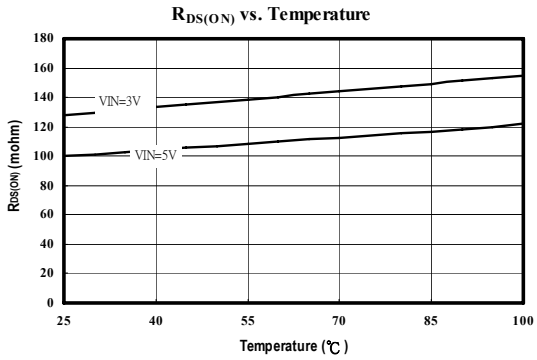

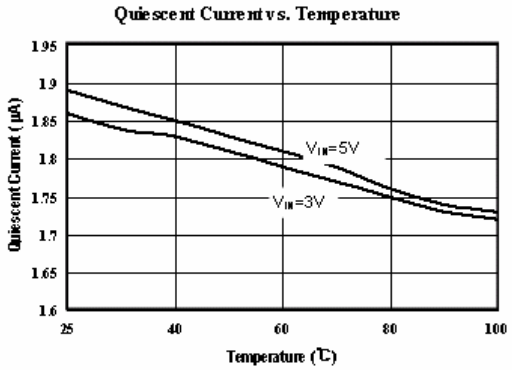

Turn-On Transient Response
(V_{IN}=3V; R_L=6Ω)

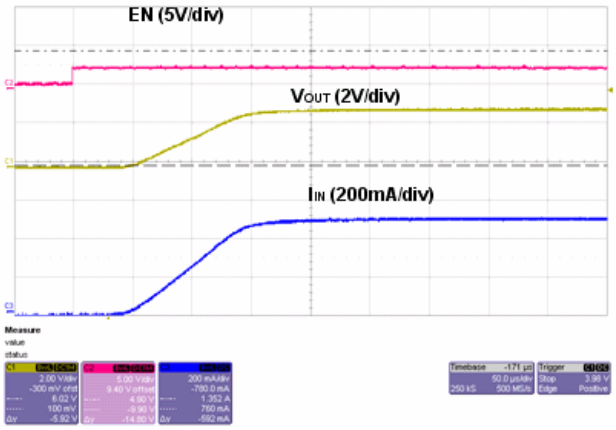

Turn-On Transient Response
(V_{IN}=5V; R_L=10Ω)

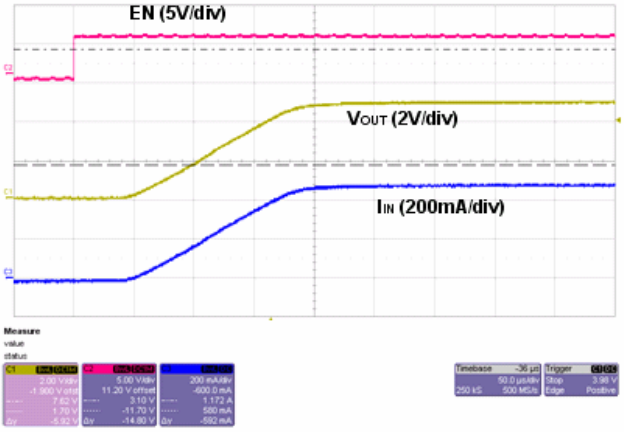

Turn-Off Transient Response
(V_{IN}=3V; R_L=6Ω)

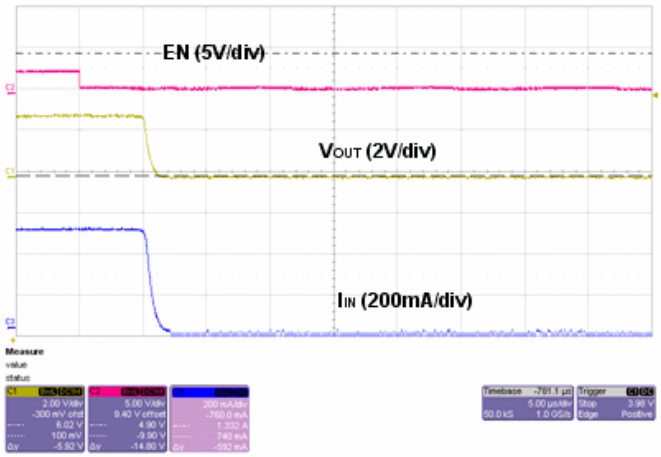

Turn-Off Transient Response
(V_{IN}=5V; R_L=10Ω)

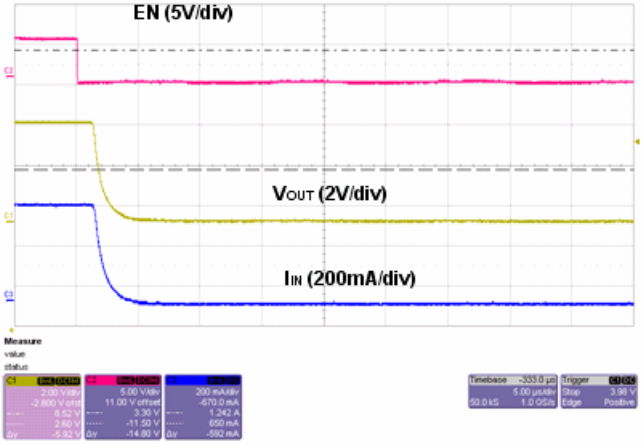

Function Block

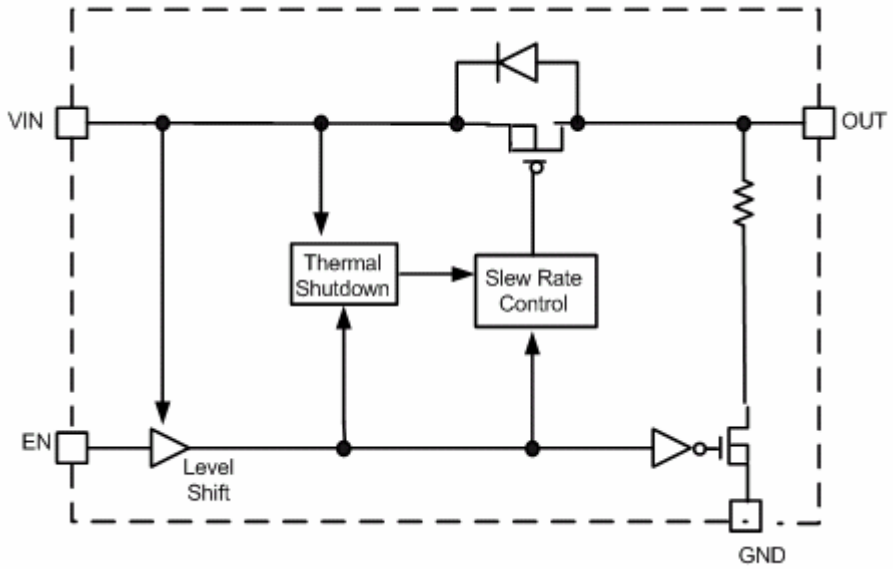

Application Information

The YB1900 featured very low quiescent current and very low $R_{DS(ON)}$ and making them ideal for battery-powered applications. The ENABLE control pin is TTL compatible and driven by 1.5V beyond making the YB1900 an ideal level-shifting load switch.

Input Capacitor Selection

A 1μF or larger input capacitor is recommended to prevent load transients from affecting upstream circuits. C_{IN} should be located as close to the device V_{IN} pin as practically. There is no specific requirement type of capacitor is recommended. However, for higher current operation, ceramic capacitors are recommended for C_{IN}.

Output Capacitor Selection

For proper slew operation, a 0.1μF or greater is recommended. The output capacitor has also no specific capacitor type requirement. If desired, C_{OUT} maybe increased without limit to accommodate any load transient

Reverse Output-to-Input Voltage Conditions and Protection

Under normal conditions, there is a parasitic diode between the output & input of the load switch. In case of V_{OUT} exceeding V_{IN}, this would forward bias the internal parasitic diode and allow excessive current flow into the V_{OUT} pin and possibly damage the load switch.

In applications, where there is a possibility of V_{OUT} exceeding V_{IN} for brief periods of time during operation, the use of larger value C_{IN} capacitor is highly recommended. A larger value of C_{IN} with respect to C_{OUT} will affect a slower C_{IN} decay rate during shutdown, thus preventing V_{OUT} from exceeding V_{IN}.
In case of extended period of time for V_{OUT} exceeding V_{IN}, it is recommended to place a Schottky diode from V_{IN} to V_{OUT}.

Thermal Considerations

The YB1900 is designed to deliver a continuous load current. The maximum limit is package power dissipation. At any given ambient temperature, the maximum package power dissipation can be determined by the following equation:

$$P_{D(MAX)} = [T_{J(MAX)}-T_A] / \theta_{JA}$$

Constraints for the YB1900 are maximum junction temperature $T_{J(MAX)}$ = 125℃, and package thermal resistance, θ_{JA} = 220℃/W.
The maximum continuous output current for YB1900 depends on package power dissipation and the $R_{DS(ON)}$ of MOSFET at $T_{J(MAX)}$. Typical conditions are calculated under normal ambient condition where T_A = 25℃ At 85℃, $P_{D(MAX)}$ = 181mW. At T_A = 25℃, $P_{D(MAX)}$ = 454mW.
The maximum current is calculated by the following equation:
$I_{OUT} < (P_{D(MAX)} / R_{DS(MAX)})$^(1/2)
For example, if VIN = 5V, $R_{DS(MAX)}$ = 100mΩ and T_A = 25℃, $I_{OUT(MAX)}$ = 2.2A.
Thermal Shutdown is employed to protect the device damage when over temperature 160℃.

PCB Layout Consideration

To maximize YB1900 performance, some board layout rules should be followed:
VIN and VOUT should be routed using wider than normal traces, and GND should be connected to a ground plane. For best performance, CIN and COUT should be placed close to the package pins.

Package Information (SOT23-5)

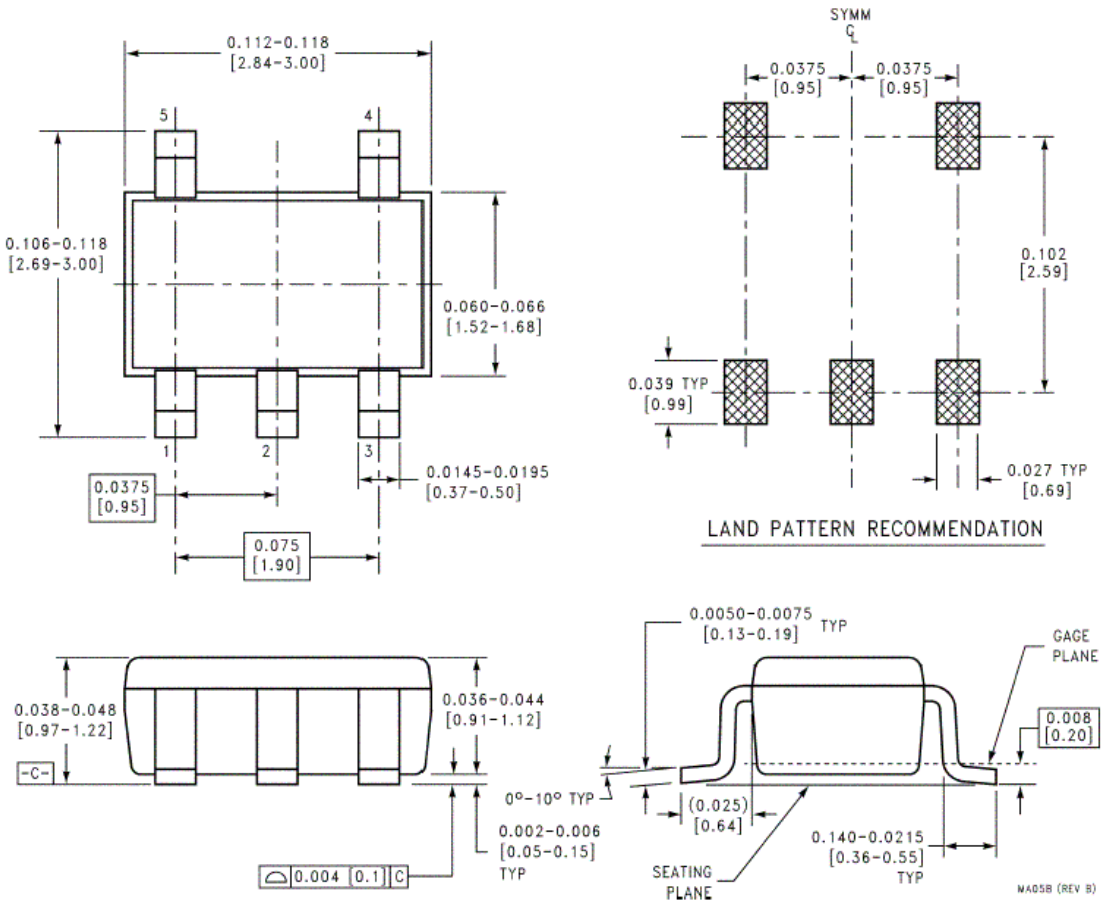

All the contains in this datasheet are not assuming any responsibility for use of any circuitry described no circuit patent license are implied and Yobon reserves the right at any time without notice to change said circuitry and specifications. Yobon Inc. would like to receive your feedback with your recommends and suggestions that is always welcome and with our appreciations.