THIS DRAWING IS UNPUBLISHED. RELEASED FOR PUBLICATION -,- .
© COPYRIGHT - BY TYCO ELECTRONICS CORPORATION. ALL RIGHTS RESERVED.

LOC	DIST
GP	00

REVISIONS

P	LTR	DESCRIPTION	DATE	DWN	APVD
	A	REVISED PER ECO-06-028339	18/DEC/06	ZMR	EDB

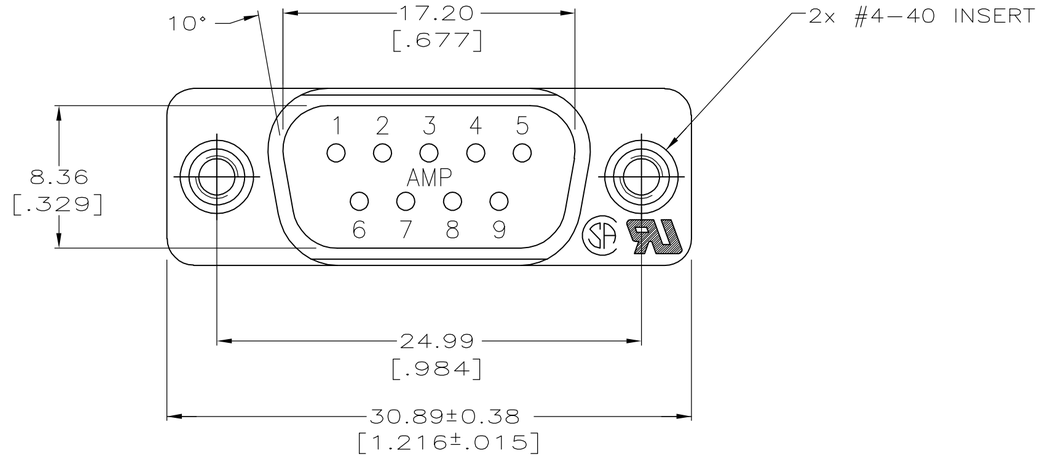

1. HOUSING: BLACK POLYESTER, UL 94V-0 RATED; CONTACTS: BRASS INSERTS: BRASS
2. GOLD PLATED FOR A LENGTH OF 3.81[.150] MIN FROM MATING END, GOLD FLASH IN MATED AREA, 2.54μm[.00010] MIN TIN ON OPPOSITE END, ALL OVER 1.27 μm[.000050] MIN NICKLE.
3. GOLD PLATED FOR A LENGTH OF 3.81 [.150] MIN FROM MATING END, 0.76μm [.000030] MIN GOLD IN MATED AREA, 2.54μm [.000100] MIN TIN ON OPPOSITE END, ALL OVER 1.27μm[.000050] MIN NICKEL
-OR-
GOLD FLASH OVER PALLADIUM NICKEL PLATED FOR LENGTH OF 3.81 [.150] MIN FROM MATING END, 0.76μm [.000030] MIN PALLADIUM NICKEL IN MATED AREA, 2.54μm [.000100] MIN TIN ON OPPOSITE END, ALL OVER 1.27μm [.000050] MIN NICKEL.

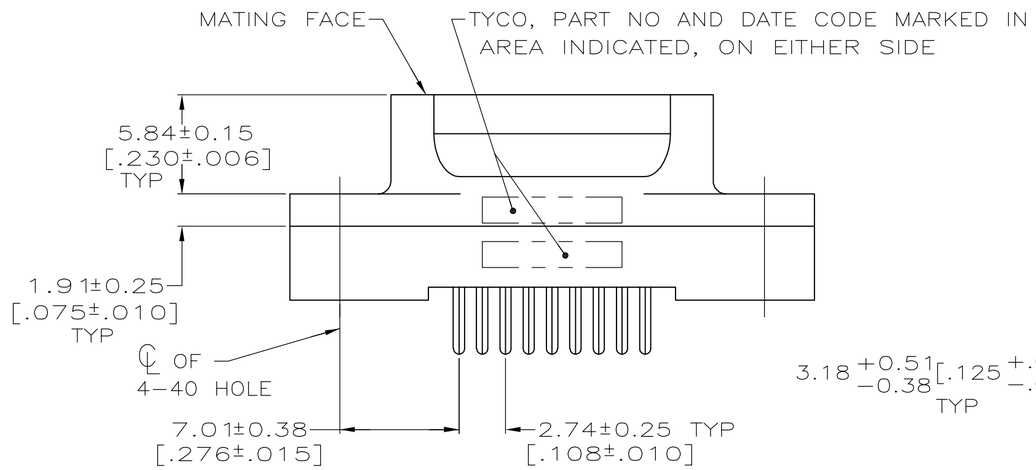

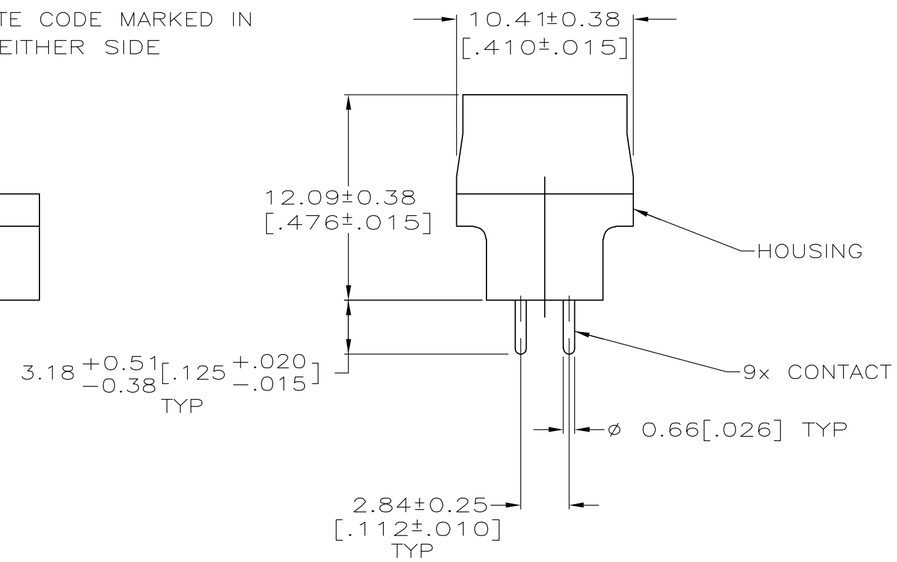

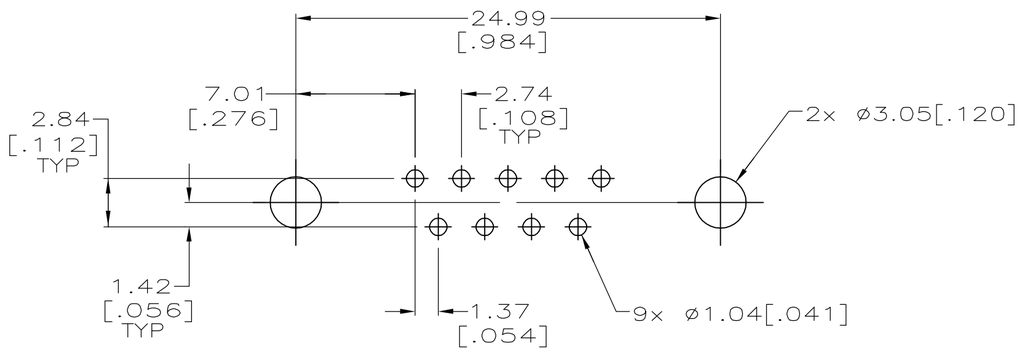

RECOMMENDED PC BOARD MOUNTING DIMENSIONS

CONTACT FINISH	PART NO
3	5745051-2
2	5745051-1

COPYRIGHT 2005
TYCO ELECTRONICS CORP
ALL RIGHTS RESERVED

THIS DRAWING IS A CONTROLLED DOCUMENT.

DIMENSIONS: mm [INCHES]

TOLERANCES UNLESS OTHERWISE SPECIFIED:
0 PLC ± -
1 PLC ± -
2 PLC ± 0.13 [.005]
3 PLC ± -
4 PLC ± -
ANGLES ± 2°

MATERIAL 1

FINISH SEE TABLE

DWN G.PETERS 12SEP05
CHK S.BOLASH 12SEP05
APVD M.WALMSLEY 12SEP05
PRODUCT SPEC 108-40025
APPLICATION SPEC —
WEIGHT —

tyco Electronics
Tyco Electronics Corporation
Harrisburg, PA 17105-3608

NAME PLUG ASSEMBLY, SIZE 1, 9 POSN, VERTICAL, AMPLIMITE HD-20

SIZE	CAGE CODE	DRAWING NO	RESTRICTED TO
A2	00779	C-5745051	—

CUSTOMER DRAWING | SCALE 4:1 | SHEET 1 OF 1 | REV A

5745051

AMP 1471-9 REV 31MAR2000