## Remote I/O R7K4D Series

## MECHATROLINK I/O MODULE

(PNP discrete input, PNP transistor output, 16 points each, e-CON connector, MECHATROLINK- I/- II use)

Functions & Features

• 16 points PNP discrete input & 16 points PNP transistor output module for MECHATROLINK- I/- II

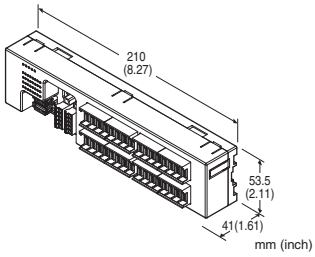


MECHATROLINK

## MODEL: R7K4DML-B-DAC32D-R[1]

## ORDERING INFORMATION

• Code number: R7K4DML-B-DAC32D-R[1]

Specify a code from below for [1].
(e.g. R7K4DML-B-DAC32D-R/Q)

• Specify the specification for option code /Q
(e.g. /C01)

## TERMINAL BLOCK

B: Tension clamp terminal block for power supply
Connector for MECHATROLINK- I/- II for communication
e-CON connector for I/O

## I/O TYPE

DAC32D: PNP discrete input &
PNP transistor output, 16 points each

## POWER INPUT

**DC Power**

R: 24 V DC
(Operational voltage range 24 V ±10 %, ripple 10 %p-p max.)

## [1] OPTIONS

blank: none
/Q: With options (specify the specification)

## SPECIFICATIONS OF OPTION: Q

**COATING (For the detail, refer to M-System's web site.)**

/C01: Silicone coating
/C02: Polyurethane coating
/C03: Rubber coating

## GENERAL SPECIFICATIONS

Connection
MECHATROLINK: MECHATROLINK- I/- II connector
Power & Sensor excitation: Separable screwless spring terminal
I/O: e-CON connector

Housing material: Flame-resistant resin (gray)
Isolation: Input or output or sensor excitation to MECHATROLINK or FE to power
Status indicator LED: PWR, ERR, SD, RD
(Refer to the instruction manual for details)
Discrete I/O status indicator LED: Green LED turns on with I/O ON

## MECHATROLINK COMMUNICATION

MECHATROLINK mode: Set with DIP switches
(MECHATROLINK-I or -II, data length; Factory setting: MECHATROLINK-II, data length 32 byte)
(Refer to the instruction manual)
Station address: 60H - 7FH
(Function selected with Rotary SW. Factory setting: 61H).
(Refer to the instruction manual)

■ MECHATROLINK-I

Baud rate: 4 Mbps
Transmission distance: 50 m max.
Distance between stations: 30 cm min.
Transmission media: MECHATROLINK cable (Model JEPMC-W6003-x-E, Yaskawa Controls Co., Ltd.)
Max. number of slaves: 15
(The maximum number of slaves might change depending on the master unit. Refer to the manual of the master unit.)
Transmission cycle: 2 msec. (fixed)
Data length: 17 byte

■ MECHATROLINK-II

Baud rate: 10 Mbps
Transmission distance: 50 m max.
Distance between stations: 50 cm min.
Transmission media: MECHATROLINK cable (Model JEPMC-W6003-x-E, Yaskawa Controls Co., Ltd.)
Max. number of slaves: 30
(The maximum number of slaves might change depending on the master unit. Refer to the manual of the master unit.)
Transmission cycle: 0.25 msec., 0.5 msec., 1 msec., 1.5 msec., 2 msec., 2.5 msec., 3 msec., 4 msec., 8 msec.
Data length: 17 byte / 32 byte selectable (Must choose identical data size for all stations within the network)

## INPUT SPECIFICATIONS

**Common**: Negative common (PNP) per 16 points
**Maximum inputs applicable at once:** No limit (at 24V DC)
**Sensor excitation**: 24 V DC ±10 %; ripple 5 %p-p max., ≤ 2 A (including discrete input load charge); rated current 8 A
**ON voltage / current**: ≥ 15 V DC (X0 through XF to GND) / ≥ 3.5 mA
**OFF voltage / current**: ≤ 5 V DC (X0 through XF to GND) / ≤ 1 mA
**Input current**: ≤ 5.5 mA per point at 24 V DC
**Input resistance**: Approx. 4.4 kΩ
**ON delay**: ≤ 0.5 msec.
**OFF delay**: ≤ 1.0 msec.

## OUTPUT SPECIFICATIONS

**Common**: Positive common (PNP) per 16 points
**Maximum outputs applicable at once:** No limit (at 24 V DC)
**Sensor Excitation**: 24 V DC ±10 %, ripple 5 %p-p max., ≤ 2 A (including discrete output load charge); rated current 8 A
**Rated output current**: 0.1 A per point, 1.6 A per common
**Residual voltage**: ≤ 1.2 V
**Leakage current**: ≤ 0.1 mA
**ON delay**: ≤ 0.5 msec.
**OFF delay**: ≤ 1.0 msec.
**Overload current protection function**: Limits the current value when overcurrent is detected
**Overheat protection function**: Turns OFF the outputs when overheat is detected
(When driving an inductive load, connect a diode in parallel with the load.)

## INSTALLATION

**Power consumption**: Approx. 75 mA (rated current 2 A)
**Operating temperature**: 0 to 55°C (32 to 131°F)
**Storage temperature**: -20 to +65°C (-4 to +149°F)
**Operating humidity**: 30 to 90 %RH (non-condensing)
**Atmosphere**: No corrosive gas or heavy dust
**Mounting**: Surface or DIN rail (35 mm rail)
**Weight**: 200 g (0.44 lb)

## PERFORMANCE

**Insulation resistance**: ≥ 100 MΩ with 500 V DC
**Dielectric strength**: 1500 V AC @ 1 minute
(input or output or sensor excitaion to power)
500 V AC @ 1 minute (MECHATROLINK or FE to input or output or sensor excitation or power)

## STANDARDS & APPROVALS

**EU conformity**:
EMC Directive
EMI EN 61000-6-4
EMS EN 61000-6-2
RoHS Directive
EN 50581

## EXTERNAL VIEW

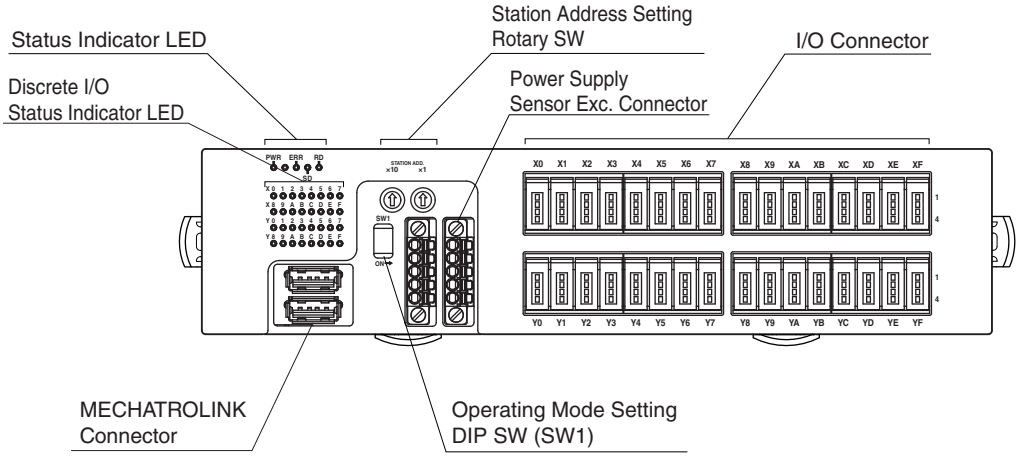

## TERMINAL ASSIGNMENTS

### ■I/O TERMINAL ASSIGNMENT

• e-CON connector

Recommended cable connector: 37104-( )-000FL (3M Company)

(The cable connector is not included in the package. Specify wire size instead of ( ); refer to the specifications of the product.)

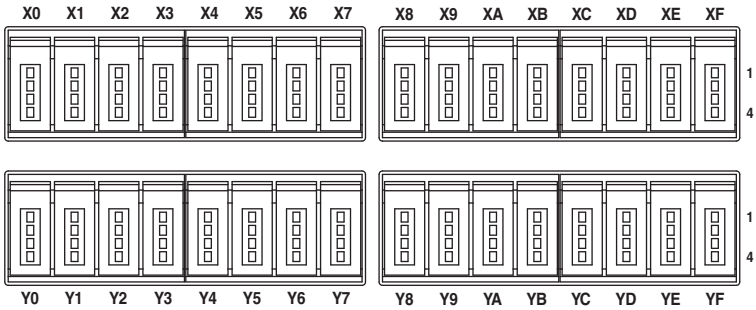


| No. | | ID | FUNCTION | No. | | ID | FUNCTION |
|---|---|---|---|---|---|---|---|
| X0 | 1 | +24V | 24V DC | X8 | 1 | +24V | 24V DC |
| | 2 | NC | Unused | | 2 | NC | Unused |
| | 3 | GND | 0V | | 3 | GND | 0V |
| | 4 | X0 | Input 0 | | 4 | X8 | Input 8 |
| X1 | 1 | +24V | 24V DC | X9 | 1 | +24V | 24V DC |
| | 2 | NC | Unused | | 2 | NC | Unused |
| | 3 | GND | 0V | | 3 | GND | 0V |
| | 4 | X1 | Input 1 | | 4 | X9 | Input 9 |
| X2 | 1 | +24V | 24V DC | XA | 1 | +24V | 24V DC |
| | 2 | NC | Unused | | 2 | NC | Unused |
| | 3 | GND | 0V | | 3 | GND | 0V |
| | 4 | X2 | Input 2 | | 4 | XA | Input 10 |
| X3 | 1 | +24V | 24V DC | XB | 1 | +24V | 24V DC |
| | 2 | NC | Unused | | 2 | NC | Unused |
| | 3 | GND | 0V | | 3 | GND | 0V |
| | 4 | X3 | Input 3 | | 4 | XB | Input 11 |
| X4 | 1 | +24V | 24V DC | XC | 1 | +24V | 24V DC |
| | 2 | NC | Unused | | 2 | NC | Unused |
| | 3 | GND | 0V | | 3 | GND | 0V |
| | 4 | X4 | Input 4 | | 4 | XC | Input 12 |
| X5 | 1 | +24V | 24V DC | XD | 1 | +24V | 24V DC |
| | 2 | NC | Unused | | 2 | NC | Unused |
| | 3 | GND | 0V | | 3 | GND | 0V |
| | 4 | X5 | Input 5 | | 4 | XD | Input 13 |
| X6 | 1 | +24V | 24V DC | XE | 1 | +24V | 24V DC |
| | 2 | NC | Unused | | 2 | NC | Unused |
| | 3 | GND | 0V | | 3 | GND | 0V |
| | 4 | X6 | Input 6 | | 4 | XE | Input 14 |
| X7 | 1 | +24V | 24V DC | XF | 1 | +24V | 24V DC |
| | 2 | NC | Unused | | 2 | NC | Unused |
| | 3 | GND | 0V | | 3 | GND | 0V |
| | 4 | X7 | Input 7 | | 4 | XF | Input 15 |

| No. | | ID | FUNCTION | No. | | ID | FUNCTION |
|---|---|---|---|---|---|---|---|
| Y0 | 1 | NC | Unused | Y8 | 1 | NC | Unused |
| | 2 | NC | Unused | | 2 | NC | Unused |
| | 3 | GND | 0V | | 3 | GND | 0V |
| | 4 | Y0 | Output 0 | | 4 | Y8 | Output 8 |
| Y1 | 1 | NC | Unused | Y9 | 1 | NC | Unused |
| | 2 | NC | Unused | | 2 | NC | Unused |
| | 3 | GND | 0V | | 3 | GND | 0V |
| | 4 | Y1 | Output 1 | | 4 | Y9 | Output 9 |
| Y2 | 1 | NC | Unused | YA | 1 | NC | Unused |
| | 2 | NC | Unused | | 2 | NC | Unused |
| | 3 | GND | 0V | | 3 | GND | 0V |
| | 4 | Y2 | Output 2 | | 4 | YA | Output 10 |
| Y3 | 1 | NC | Unused | YB | 1 | NC | Unused |
| | 2 | NC | Unused | | 2 | NC | Unused |
| | 3 | GND | 0V | | 3 | GND | 0V |
| | 4 | Y3 | Output 3 | | 4 | YB | Output 11 |
| Y4 | 1 | NC | Unused | YC | 1 | NC | Unused |
| | 2 | NC | Unused | | 2 | NC | Unused |
| | 3 | GND | 0V | | 3 | GND | 0V |
| | 4 | Y4 | Output 4 | | 4 | YC | Output 12 |
| Y5 | 1 | NC | Unused | YD | 1 | NC | Unused |
| | 2 | NC | Unused | | 2 | NC | Unused |
| | 3 | GND | 0V | | 3 | GND | 0V |
| | 4 | Y5 | Output 5 | | 4 | YD | Output 13 |
| Y6 | 1 | NC | Unused | YE | 1 | NC | Unused |
| | 2 | NC | Unused | | 2 | NC | Unused |
| | 3 | GND | 0V | | 3 | GND | 0V |
| | 4 | Y6 | Output 6 | | 4 | YE | Output 14 |
| Y7 | 1 | NC | Unused | YF | 1 | NC | Unused |
| | 2 | NC | Unused | | 2 | NC | Unused |
| | 3 | GND | 0V | | 3 | GND | 0V |
| | 4 | Y7 | Output 7 | | 4 | YF | Output 15 |

## ■ POWER SUPPLY, SENSOR EXCITATION

**Cable connector**: FMC1,5 / 5-STF-3,5
(Phoenix Contact) (included in the package)
**Applicable wire size**: 0.2 – 1.5 mm$^2$; stripped length 10 mm
**Recommended solderless terminal**
- AI0,25-10YE 0.25 mm$^2$ (Phoenix Contact)
- AI0,34-10TQ 0.34 mm$^2$ (Phoenix Contact)
- AI0,5-10WH 0.5 mm$^2$ (Phoenix Contact)
- AI0,75-10GY 0.75 mm$^2$ (Phoenix Contact)
- A1-10 1.0 mm$^2$ (Phoenix Contact)
- A1,5-10 1.5 mm$^2$ (Phoenix Contact)

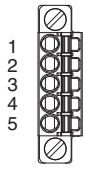


1. PWR+ Power Supply (24V DC)
2. PWR– Power Supply (0V)
3. FE Functional earth
4. SNSR.EXC+ Sensor excitation (24V DC)
5. SNSR.EXC– Sensor excitation (0V)

## ■ MECHATROLINK CONNECTION

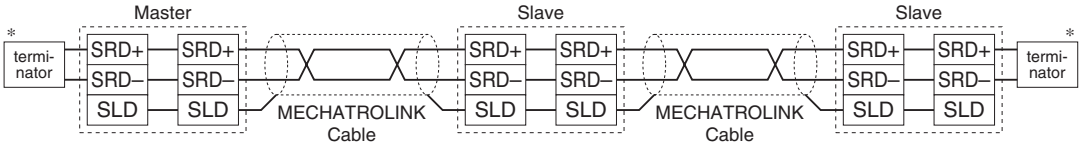


*Terminator
Be sure to connect the terminating resistors to the unit at both ends of transmission line.
Use the terminating resistor dedicated for MECHATROLINK: Model JEPMC-W6022, Yaskawa Controls Co., Ltd.
Certain types of Master units may have incorporated terminating resistors. Consult the instruction manual of the Master unit.

## MECHATROLINK RELATED COMMANDS

R7K4DML (Simple I/O) communicates with I/O service with no processor, therefore it uses a connectionless communication protocol. There is no application layer either; the R7K4DML interchanges I/O data via data link layer.

### ■ MECHATROLINK DATA LINK LAYER COMMAND DESCRIPTIONS

The following tables explain the two Commands supported by the R7K4DML.

**• MDS Command (04H) Data Format**

| BYTE | COMMAND | RESPONSE | REMARKS |
|---|---|---|---|
| 0 | MDS (04H) | S(0) (90H) | Message Data Search (MDS) Command: Read the ID from slave station(s)<br>S(0): Response to MDS |
| 1 | 0 | ID | |
| 2 | 0 | | |
| 3 | 0 | 0 | All 0 |
| 4 | 0 | 0 | |
| 5 | 0 | 0 | |
| 6 | 0 | 0 | |
| 7 | 0 | 0 | |
| 8 | 0 | 0 | |
| 9 | 0 | 0 | |
| 10 | 0 | 0 | |
| 11 | 0 | 0 | |
| 12 | 0 | 0 | |
| 13 | 0 | 0 | |
| 14 | 0 | 0 | |
| 15 | 0 | 0 | |
| 16 | 0 | 0 | |
| 17<br>:<br>31 | 0<br>:<br>0 | 0<br>:<br>0 | Byte 17 through 31 are always 0 in the 32-byte mode.<br>These bytes are unavailable for MECHATROLINK-I and MECHATROLINK-II in the 17-byte mode. |

**• CDRW Command (03H) Data Format**

| BYTE | COMMAND | RESPONSE | REMARKS |
|---|---|---|---|
| 0 | CDRW (03H) | ACK (01H) | Cyclic Data Read/Write (CDRW) Command: Link transmission<br>Acknowledge (ACK): Positive response to CDRW |
| 1 | Out Data: Lowest | In Data: Lowest | Order of data: Little Endian |
| 2 | | | |
| 3 | | | |
| 4 | | | |
| 5 | | | |
| 6 | | | |
| 7 | | | |
| 8 | | | |
| 9 | | | |
| 10 | | | |
| 11 | | | |
| 12 | | | |
| 13 | | | |
| 14 | | | |
| 15 | | | |
| 16 | Out Data: Highest | In Data: Highest | |
| 17<br>:<br>31 | (Out Data: Highest) | (In Data: Highest) | Byte 17 through 31 are unavailable for MECHATROLINK-I and MECHATROLINK-II in the 17-byte mode.<br>(Only available for MECHATROLINK-II in the 32-byte mode) |

## I/O DATA DESCRIPTIONS

### ■ 17-BYTE MODE

**•16 points input data**

| Byte | Bit7 | Bit6 | Bit5 | Bit4 | Bit3 | Bit2 | Bit1 | Bit0 |
|---|---|---|---|---|---|---|---|---|
| 1 | In7 | In6 | In5 | In4 | In3 | In2 | In1 | In0 |
| 2 | In15 | In14 | In13 | In12 | In11 | In10 | In9 | In8 |
| 3 | 0 | 0 | 0 | 0 | 0 | 0 | 0 | 0 |
| 4 | 0 | 0 | 0 | 0 | 0 | 0 | 0 | 0 |
| 5 | 0 | 0 | 0 | 0 | 0 | 0 | 0 | 0 |
| ⋮ | 0 | 0 | 0 | 0 | 0 | 0 | 0 | 0 |
| 12 | 0 | 0 | 0 | 0 | 0 | 0 | 0 | 0 |
| 13 | 0 | 0 | 0 | 0 | 0 | 0 | 0 | 0 |
| 14 | 0 | 0 | 0 | 0 | 0 | 0 | 0 | 0 |
| 15 | 0 | 0 | 0 | 0 | 0 | 0 | 0 | 0 |
| 16 | 0 | 0 | 0 | 0 | 0 | 0 | 0 | 0 |

**•16 points output data**

| Byte | Bit7 | Bit6 | Bit5 | Bit4 | Bit3 | Bit2 | Bit1 | Bit0 |
|---|---|---|---|---|---|---|---|---|
| 1 | 0 | 0 | 0 | 0 | 0 | 0 | 0 | 0 |
| 2 | 0 | 0 | 0 | 0 | 0 | 0 | 0 | 0 |
| 3 | 0 | 0 | 0 | 0 | 0 | 0 | 0 | 0 |
| 4 | 0 | 0 | 0 | 0 | 0 | 0 | 0 | 0 |
| 5 | 0 | 0 | 0 | 0 | 0 | 0 | 0 | 0 |
| ⋮ | 0 | 0 | 0 | 0 | 0 | 0 | 0 | 0 |
| 12 | 0 | 0 | 0 | 0 | 0 | 0 | 0 | 0 |
| 13 | 0 | 0 | 0 | 0 | 0 | 0 | 0 | 0 |
| 14 | 0 | 0 | 0 | 0 | 0 | 0 | 0 | 0 |
| 15 | Out7 | Out6 | Out5 | Out4 | Out3 | Out2 | Out1 | Out0 |
| 16 | Out15 | Out14 | Out13 | Out12 | Out11 | Out10 | Out9 | Out8 |

### ■ 32-BYTE MODE

**•16 points input data**

| Byte | Bit7 | Bit6 | Bit5 | Bit4 | Bit3 | Bit2 | Bit1 | Bit0 |
|---|---|---|---|---|---|---|---|---|
| 1 | In7 | In6 | In5 | In4 | In3 | In2 | In1 | In0 |
| 2 | In15 | In14 | In13 | In12 | In11 | In10 | In9 | In8 |
| 3 | 0 | 0 | 0 | 0 | 0 | 0 | 0 | 0 |
| 4 | 0 | 0 | 0 | 0 | 0 | 0 | 0 | 0 |
| 5 | 0 | 0 | 0 | 0 | 0 | 0 | 0 | 0 |
| ⋮ | 0 | 0 | 0 | 0 | 0 | 0 | 0 | 0 |
| 28 | 0 | 0 | 0 | 0 | 0 | 0 | 0 | 0 |
| 29 | 0 | 0 | 0 | 0 | 0 | 0 | 0 | 0 |
| 30 | 0 | 0 | 0 | 0 | 0 | 0 | 0 | 0 |
| 31 | 0 | 0 | 0 | 0 | 0 | 0 | 0 | 0 |
| 32 | 0 | 0 | 0 | 0 | 0 | 0 | 0 | 0 |

**•16 points output data**

| Byte | Bit7 | Bit6 | Bit5 | Bit4 | Bit3 | Bit2 | Bit1 | Bit0 |
|---|---|---|---|---|---|---|---|---|
| 1 | 0 | 0 | 0 | 0 | 0 | 0 | 0 | 0 |
| 2 | 0 | 0 | 0 | 0 | 0 | 0 | 0 | 0 |
| 3 | 0 | 0 | 0 | 0 | 0 | 0 | 0 | 0 |
| 4 | 0 | 0 | 0 | 0 | 0 | 0 | 0 | 0 |
| 5 | 0 | 0 | 0 | 0 | 0 | 0 | 0 | 0 |
| ⋮ | 0 | 0 | 0 | 0 | 0 | 0 | 0 | 0 |
| 28 | 0 | 0 | 0 | 0 | 0 | 0 | 0 | 0 |
| 29 | 0 | 0 | 0 | 0 | 0 | 0 | 0 | 0 |
| 30 | 0 | 0 | 0 | 0 | 0 | 0 | 0 | 0 |
| 31 | Out7 | Out6 | Out5 | Out4 | Out3 | Out2 | Out1 | Out0 |
| 32 | Out15 | Out14 | Out13 | Out12 | Out11 | Out10 | Out9 | Out8 |

0: OFF, 1: ON

At the loss of communication, output is hold. (last data correctly received is hold)

## EXTERNAL DIMENSIONS unit: mm (inch)

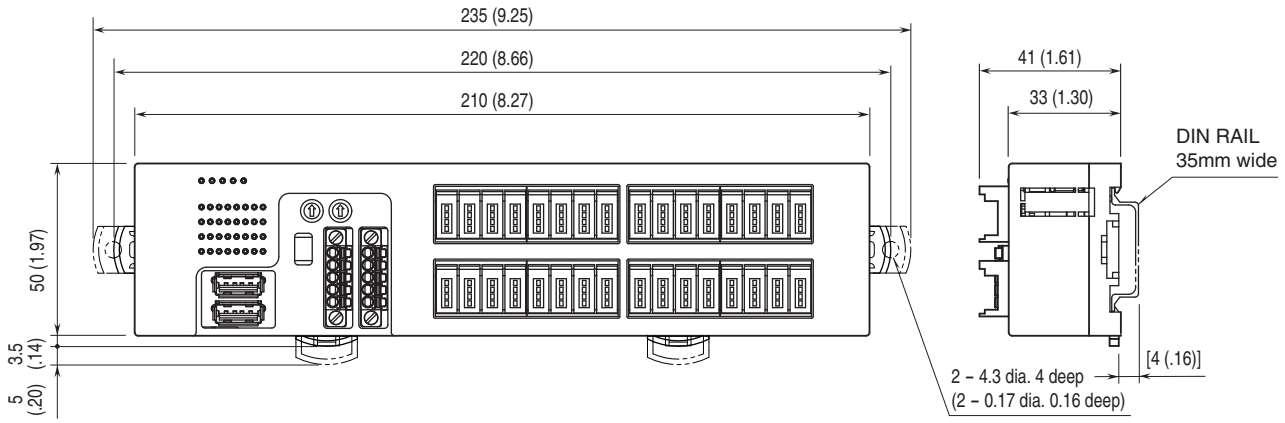

## MOUNTING REQUIREMENTS unit: mm (inch)

## SCHEMATIC CIRCUITRY & CONNECTION DIAGRAM

Note: In order to improve EMC performance, bond the FE terminal to ground.
Caution: FE terminal is NOT a protective conductor terminal.

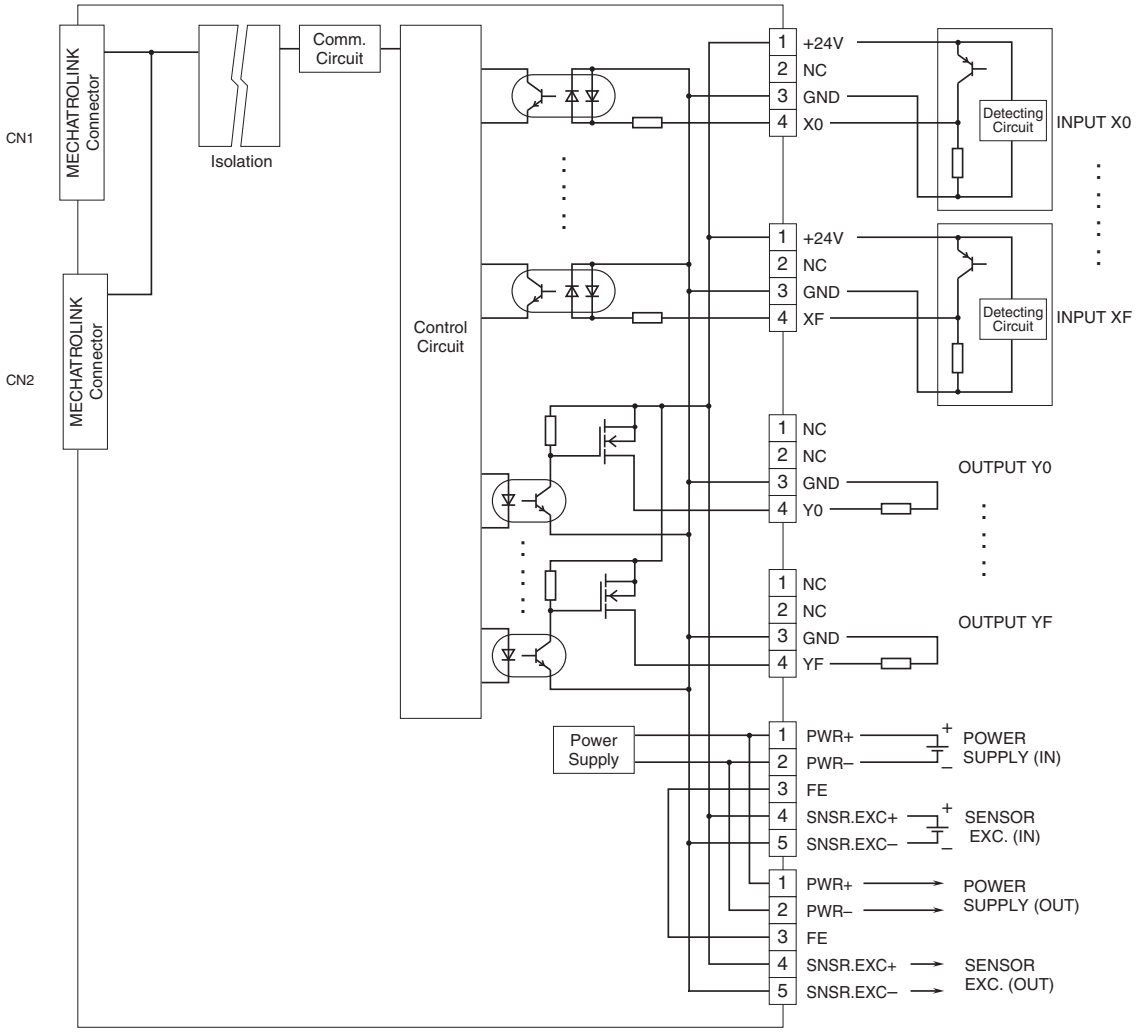


■ **2–Wire Sensor**

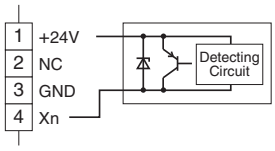

⚠ Specifications are subject to change without notice.