Part	L	Tol	R_{DC}	I_{DC}
	(μH)	%	MAX	I_N
			(Ω)	(A)
CD75-100	10 @2.52 MHz	K	0.07	2.3
CD75-120	12 @2.52 MHz	K	0.08	2
CD75-150	15 @2.52 MHz	K	0.09	1.8
CD75-180	18 @2.52 MHz	K	0.1	1.6
CD75-220	22 @2.52 MHz	K	0.11	1.5
CD75-270	27 @2.52 MHz	K	0.12	1.3
CD75-330	33 @2.52 MHz	K	0.13	1.2
CD75-390	39 @2.52 MHz	K	0.16	1.1
CD75-470	47 @2.52 MHz	K	0.18	1.1
CD75-560	56 @2.52 MHz	K	0.24	0.9
CD75-680	68 @2.52 MHz	K	0.28	0.9
CD75-820	82 @2.52 MHz	K	0.37	0.8
CD75-101	100 @1.0 kHz	K	0.43	0.7
CD75-121	120 @1.0 kHz	K	0.47	0.7
CD75-151	150 @1.0 kHz	K	0.64	0.6
CD75-181	180 @1.0 kHz	K	0.71	0.5
CD75-221	220 @1.0 kHz	K	0.96	0.5
CD75-271	270 @1.0 kHz	K	1.11	0.4
CD75-331	330 @1.0 kHz	K	1.26	0.4
CD75-391	390 @1.0 kHz	K	1.77	0.4
CD75-471	470 @1.0 kHz	K	1.96	0.3

SPECIFICATION

TYPE = CD75
CONSTRUCTION = SURFACE MOUNT POWER INDUCTOR
TERIMAL COATING = NICKEL
OPERATING TEMP. = -40 TO +85˚C
STORAGE TEMP = -55 TO +125˚C
INSULATION RESISTANCE = 100MOhm. 100V TERMINAL-CORE
DIELECTRIC STREGTH = 250Vac TERMINAL-CORE
HUMIDITY EFFECTS = L±5 @ 95%RH, 40˚C, 1HR
Q±5 @ 95%RH, 40˚C, 1HR
PACKAGING = 1000PCS/REEL
MARKING = 3 CHARACTERS, VALUE

NOTE

TOLERANCES K=10%; M=20%.

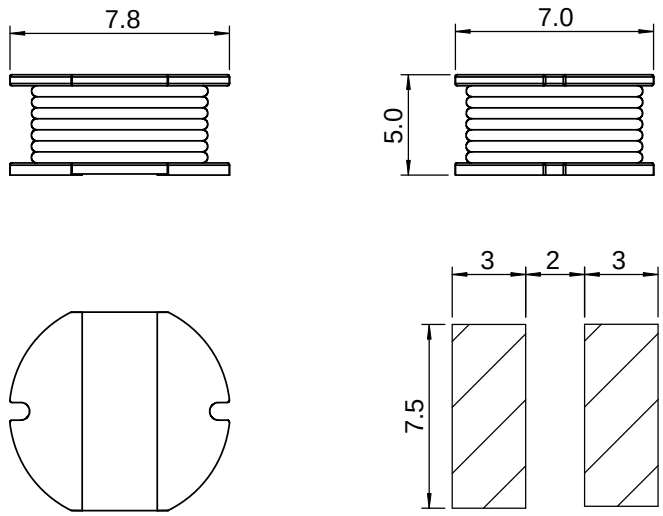

PROPRIETARY AND CONFIDENTIAL
THE INFORMATION CONTAINED IN THIS DRAWING IS THE SOLE PROPERTY OF AIT COMPONENTS LTD. ANY REPRODUCTION IN PART OR AS A WHOLE WITHOUT THE WRITTEN PERMISSION OF AIT COMPONENTS LTD IS STRICTLY PROHIBITED.

	NAME	DATE
DRAWN		
CHECKED		
ENG APPR.		

UNLESS OTHERWISE SPECIFIED
DIMENSIONS ARE IN MILLIMETERS
TOLERANCES:
ONE PLACE DECIMAL +/-0.3
TWO PLACE DECIMAL +/-0.13
ANGLE +/-1 DEGREE

MATERIAL --
FINISH --

DO NOT SCALE DRAWING

AIT COMPONENTS LTD
www.aitcomponents.com

TITLE:
CD75 SMD POWER INDUCTOR

SIZE A | DWG. NO. CD75 SMD POWER INDUCTOR | REV. 00
SCALE:1:1 | SHEET 1 OF 1