Honeywell

LIMIT SWITCH

CATALOGUE LISTING
GLS

CHART NO.
MTG-GL-194

MTG-GL-194

REPLACES A018-185

DRAWING NUMBER

ISSUE 03

RELEASE NUMBER

REVISIONS

2	9/96	A018-275
3	12/96	A018-293
4	7/97	CO-000083
5	8/97	CO-000106
6	CO/395	1 WEIR 6/98

FIG. 1

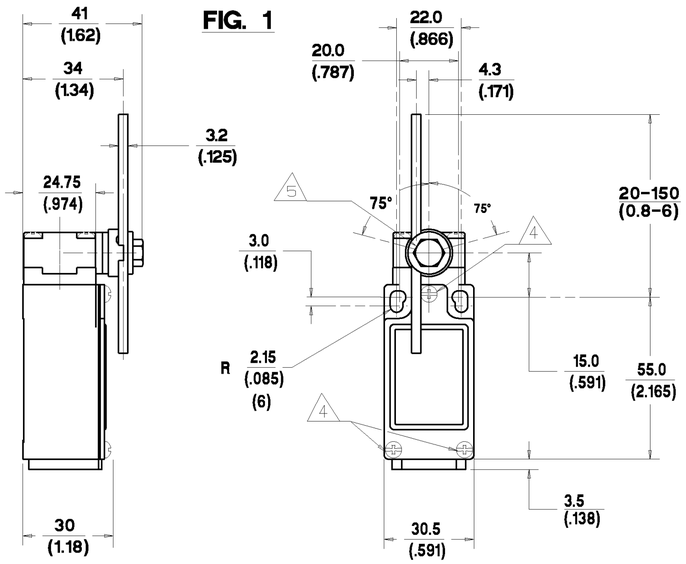

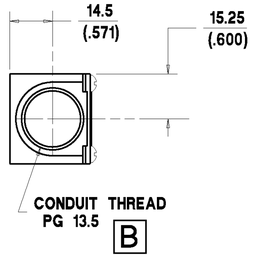

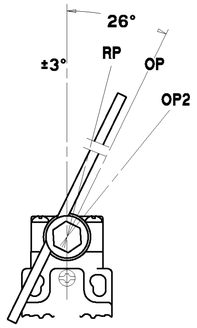

NOTES:-

1. ZINC DIECAST BODY AND HEAD WITH STEEL COVER. BODY AND COVER FINISHED IN MICRO SWITCH BLUE EPOXY PAINT. HEAD FINISHED IN BLACK EPOXY PAINT.
2. MINIMUM OPERATING VELOCITY (Vmin) : 0.26 rad/s
   MAXIMUM OPERATING VELOCITY (Vmax) : 25 rad/s
   MAXIMUM OPERATING FREQUENCY (Fmax) : 250 OPS/MIN
3. FREE POSITION (FP), OPERATING POINT (OP), OVERTRAVEL (OT) AND PRETRAVEL (PT) ALL TO EN50047.
4. MAXIMUM TIGHTENING TORQUE FOR FIXING SCREW : 0.5Nm (4.4in.LB)
5. MAXIMUM TIGHTENING TORQUE FOR FIXING SCREW : 0.8Nm (7in.LB)

NO CHANGES CAN BE MADE TO THIS DRAWING WITHOUT JOINT NEWHOUSE/FREEPORT APPROVAL

	SNAP-ACTION CONTACTS	SLOW-ACTION CONTACTS (BREAK BEFORE MAKE)	SLOW-ACTION CONTACTS (MAKE BEFORE BREAK)	SLOW-ACTION CONTACTS (2 NORMALLY CLOSED)	CONTACT BLOCK DIAGRAM TERMINAL DESIGNATION TO EN 50013
	13 14 Zb 21 22	21 22 Zb 13 14	21 22 Zb 13 14	11 12 2Y 21 22	
NOMINAL TRAVELS AND RELATED TERMINALS	0° 26° 54° to 75°; 21-22 13-14; FP OP * OT; DT=11.5°; 21-22 13-14; RP=14.5°	36.5°; 0° 26° 39° to 75°; 21-22 13-14; FP OP * OP2 OT	0° 26° 39° 50.5° to 75°; 21-22 13-14; FP OP OP2 * OT	46.5°; 0° 26° to 75°; 21-22 11-12; FP OP * OT	CONTACT CLOSED; CONTACT OPEN; * POSITIVE OPENING TO IEC 947-5-1-3
NORMAL OPERATING TORQUE MAX Nmm (in.lbs)	120 (1.1)	110 (1.0)	110 (1.0)	110 (1.0)	
MAXIMUM DISCONNECT TORQUE Nmm (in.lbs)	140 (1.3)	160 (1.5)	170 (1.6)	150 (1.4)	

01 OR 07	03 OR 33	04 OR 34	06 OR 36
			BASIC SWITCH WITH SILVER CONTACTS
			BASIC SWITCH WITH GOLD PLATED CONTACTS

SIDE ROTARY ACTUATOR ADJUSTABLE METAL ROD (SEE FIG. 1)

BASIC SWITCH

CONDUIT THREAD (SEE FIGS. 1 & 2)

HEAD ORIENTATION AND LEVER DIRECTION OF OPERATION (SEE FIG. 3)

EN50047 BODY TYPE (SEE FIG. 1) — GLC X XX A4J - X XXXX — MODIFICATION CODE

1/2" NPT X 14 CONDUIT THREAD ADAPTER	A	01	1
PG 13.5 CONDUIT THREAD	B	03	2
M20 X 1.5 CONDUIT THREAD	C	04	3
PF 1/2 CONDUIT THREAD	D	06	4
		07	5
		33	
		34	
		36	

BLANK = LEVER TO FRONT, SWITCHING IN BOTH DIRECTIONS.

C021	CABLE 5 WIRE, WITH GROUND, LAST CHARACTER IS CABLE LENGTH 1 = 1MTR. CABLE LENGTHS ARE FROM 1 TO 9 METRES. ONLY AVAILABLE WITH CONDUIT THREAD TYPE 'B' .
Q01	CONNECTOR , 4 PIN MICRO. ONLY AVAILABLE WITH CONDUIT THREAD TYPE 'B' .
Q02	CONNECTOR , 5 PIN MICRO TWIN KEYWAY. ONLY AVAILABLE WITH CONDUIT THREAD TYPE 'B' .
Q03	CONNECTOR , 4 PIN MINI. ONLY AVAILABLE WITH CONDUIT THREAD TYPE 'B' .
Q04	CONNECTOR , 5 PIN MINI. ONLY AVAILABLE WITH CONDUIT THREAD TYPE 'B' .
Q07	CONNECTOR , 5 PIN MICRO. ONLY AVAILABLE WITH CONDUIT THREAD TYPE 'B' .

NOTE:-
ANY STANDARD LISTING WITH SUFFIX 'RS' OR 'FE' IS PERMITTED.

FIG. 2

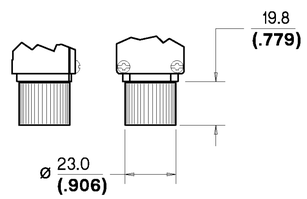

1/2" NPT X 14 CONDUIT THREAD ADAPTER

A

FIG 3

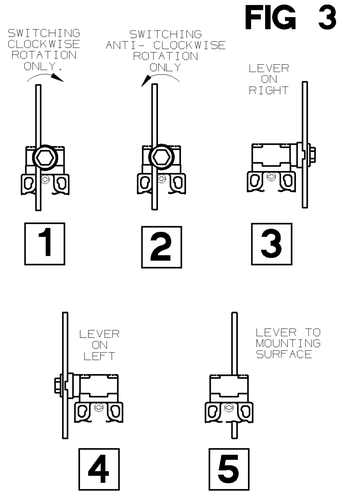

NOTE:
FOR CONNECTION DIAGRAMS AND ADDITIONAL ELECTRICAL, ENVIRONMENTAL & DIMENSIONAL INFORMATION SEE DRAWING GL-49212.

STANDARD SILVER CONTACTS		GOLD PLATED CONTACTS	ENVIRONMENTAL	APPROVALS
ELECTRICAL RATING		ELECTRICAL RATING		
AC	DC			
A300 AC15 Ue Ie	Q300 DC13 Ue Ie	I_{th} = 10A	IP66 NEMA 1,4,12,13	UL
VOLTS AMPS	VOLTS AMPS	1V 10µA MIN.	TEMP RANGE : -25°C TO 85°C, -13°F TO 185°F	CSA
120 6	125 0.55	50V 100mA MAX.	STORAGE : -40°C TO 85°C, -40°F TO 185°F	IEC 947-5-1
240 3	250 0.27		SHOCK : 50G PER IEC 68-2-27	EN50047
			VIBRATION : 10G PER IEC 68-2-6	

DRAWN	M. LOCH	4/94
CHECK	I. WEIR	4/94
DESIGN	J. BOYD	4/94
AUTHOR'N	P. TRICKETT	4/94

THE COPYRIGHT OF THIS DRAWING IS THE PROPERTY OF HONEYWELL LTD. THE DRAWING IS SUPPLIED IN CONFIDENCE AND MUST NOT BE USED FOR ANY PURPOSE OTHER THAN THAT FOR WHICH IT IS SUPPLIED.

THIRD ANGLE PROJECTION | SCALE 1:1 | DIMENSIONS ARE IN MM/INCHES. | MODIFY ON CAD SYSTEM ONLY