KSZ8842-16/32 MQL/MVL/MVLI

2-Port Ethernet Switch with Non-PCI Interface

Data Sheet Rev 1.4

General Description

The KSZ8842-series of 2-port switches includes PCI and non-PCI CPU interfaces, and are available in 8/16-bit and 32-bit bus designs (see **Ordering Information**). This datasheet describes the KSZ8842M-series of non-PCI CPU interface chips. For information on the KSZ8842 PCI CPU interface switches, refer to the KSZ8842P datasheet.

The KSZ8842M is the industry's first fully managed, 2-port switch with a non-PCI CPU interface. It is based on a proven, 4th generation, integrated Layer-2 switch, compliant with IEEE 802.3u standards. Also an industrial temperature grade version of the KSZ8842, the KSZ8842MQLI, can be ordered (see **Ordering Information**).

The KSZ8842M can be configured as a switch or as a low-latency (≤ 310 nanoseconds) repeater in latency-critical, embedded or industrial Ethernet applications. For industrial applications, the KSZ8842M can run in half-duplex mode regardless of the application.

The KSZ8842M offers an extensive feature set that includes tag/port-based VLAN, quality of service (QoS) priority management, management information base (MIB) counters, and CPU control/data interfaces to effectively address Fast Ethernet applications.

The KSZ8842M contains: Two 10/100 transceivers with patented, mixed-signal, low-power technology, two media access control (MAC) units, a direct memory access (DMA) channel, a high-speed, non-blocking, switch fabric, a dedicated 1K entry forwarding table, and an on-chip frame buffer memory.

Functional Diagram

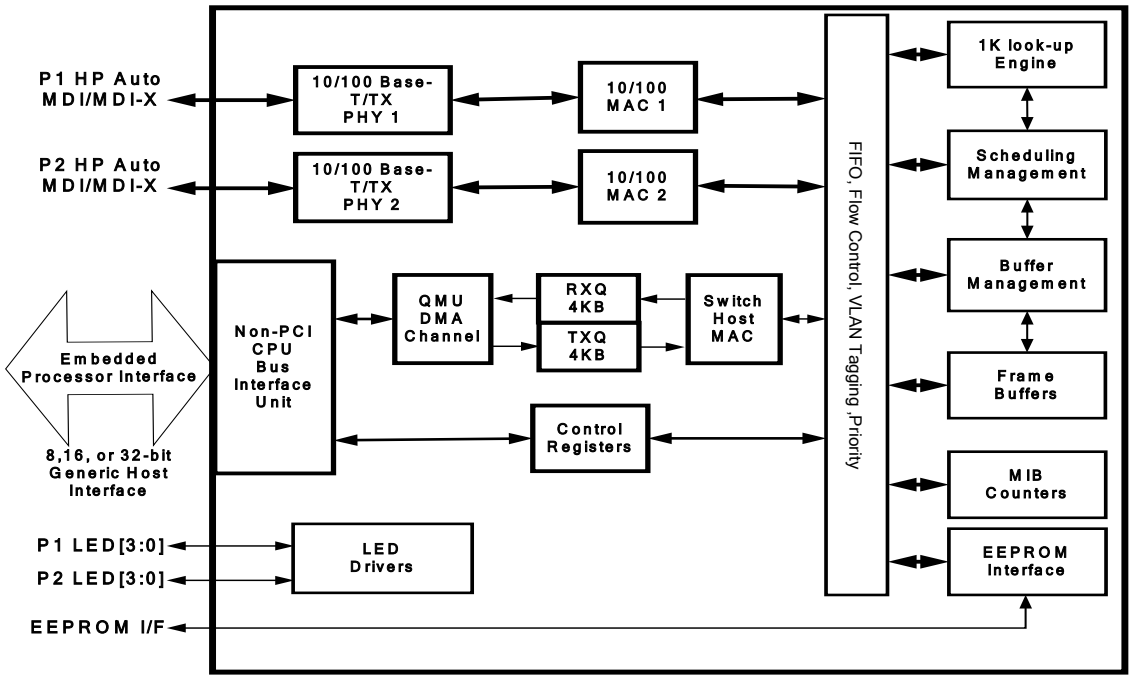

Figure 1. KSZ8842M Functional Diagram

Features

Switch Management

- Non-blocking switch fabric assures fast packet delivery by utilizing a 1K entry forwarding table
- Fully compliant with IEEE 802.3u standards
- Full-duplex IEEE 802.3x flow control (Pause) with force mode option
- Half-duplex back pressure flow control

Advanced Switch Management

- IEEE 802.1Q VLAN support for up to 16 groups (full range of VLAN IDs)
- VLAN ID tag/untag options, on a per port basis
- IEEE 802.1p/Q tag insertion or removal on a per port basis (egress)
- Programmable rate limiting at the ingress and egress ports
- Broadcast storm protection
- IEEE 802.1d spanning tree protocol support
- MAC filtering function to filter or forward unknown unicast packets
- Direct forwarding mode enabling the processor to identify the ingress port and to specify the egress port
- Internet Group Management Protocol (IGMP) v1/v2 snooping support for multicast packet filtering
- IPV6 Multicast Listener Discovery (MLD) snooping support

Monitoring

- Port mirroring/monitoring/sniffing: ingress and/or egress traffic to any port
- MIB counters for fully compliant statistics gathering – 34 MIB counters per port
- Loopback modes for remote failure diagnostics

Comprehensive Register Access

- Control registers configurable on-the-fly (port-priority, 802.1p/d/Q)

QoS/CoS Packets Prioritization Support

- Per port, 802.1p and DiffServ-based
- Remapping of 802.1p priority field on a per port basis

Power Modes, Packaging, and Power Supplies

- Full-chip hardware power-down (register configuration not saved) allows low power dissipation
- Per port-based, software power-save on PHY (idle link detection, register configuration preserved)
- Single power supply: 3.3V
- Commercial Temperature Range: 0°C to +70°C
- Industrial Temperature Range: –40°C to +85°C (see **Ordering Information**)
- Available in 128-pin PQFP (optional package: 128-pin LQFP)
- Available in –16 version for 8/16-bit bus support and –32 version for 32-bit bus support (see **Ordering Information**).

Additional Features

In addition to offering all of the features of an integrated Layer-2 managed switch, the KSZ8842M offers:

- Repeater mode capabilities to allow for cut through in latency critical industrial Ethernet or embedded Ethernet applications
- Dynamic buffer memory scheme
  – Essential for applications such as Video over IP where image jitter is unacceptable
- 2-port switch with a flexible 8, 16, or 32-bit generic host processor interfaces
- Micrel LinkMD™ cable diagnostics to determine cable length, diagnose faulty cables, and determine distance-to-fault
- Hewlett Packard (HP) Auto-MDIX crossover with disable and enable options
- Four priority queues to handle voice, video, data, and control packets
- Ability to transmit and receive jumbo frame sizes up to 1916 bytes

Applications

- Video Distribution Systems
- High-end Cable, Satellite, and IP set-top boxes
- Video over IP
- Voice over IP (VoIP) and Analog Telephone Adapters (ATA)
- Industrial Control in Latency Critical Applications
- Motion Control
- Industrial Control Sensor Devices (Temperature, Pressure, Levels, and Valves)
- Security and Surveillance Cameras

Markets

- Fast Ethernet
- Embedded Ethernet
- Industrial Ethernet

LinkMD is a trademark of Micrel, Inc.
Product names used in this datasheet are for identification purposes only and may be trademarks of their respective companies.

Ordering Information

Part Number	Temperature Range	Package
KSZ8842-16MQL	0°C to 70°C	128-Pin PQFP
KSZ8842-32MQL	0°C to 70°C	128-Pin PQFP
KSZ8842-16MVL	0°C to 70°C	128-Pin LQFP (Available Q4 Samples)
KSZ8842-32MVL	0°C to 70°C	128-Pin LQFP (Available Q4 Samples)
KSZ8842-16MVLI	–40°C to +85°C	128-Pin LQFP (Available Q4 Samples)
KSZ8842-16MQL-Eval	Evaluation Board for the KSZ8842-16MQL	

Contacts

Location	Address	City, State/Province, Country	Telephone	Fax
Corporate HQ	2180 Fortune Drive	San Jose, CA 95131 USA	+1 (408) 944-0800	+1 (408) 474-1000
Eastern USA	93 Branch Street	Medford, NJ 08055 USA	+1 (609) 654-0078	+1 (609) 546-0989
Central USA	2425 N.Central Expressway, Suite 351	Richardson, TX 75080 USA	+1 (972) 393-2533	+1 (972) 393-2370
Western USA	2180 Fortune Drive	San Jose, CA 95131 USA	+1 (408) 944-0800	+1 (408) 914-7878
China	Room 712, Block B, Intl. Chamber of Commerce Bldg., Fuhua Rd 1, Futian	Shenzhen, PR China 518026	+86 (755) 8302-7618	+86 (755) 8302-7637
Korea	8F AnnJay Tower Bldg 718-2 Yeoksam-dong, Kangnam-ku	Seoul 135-080 Korea	+82 (2) 538-2380	+82 (2) 538-2381
Taiwan	4F, No. 18, Lane 321, Yang-Guang Street, Nei-Hu Chu	Taipei, 11468 Taiwan, R.O.C.	+886 (2) 8751-0600	+886 (2) 8751-0746
Singapore	300 Beach Road, #10-07 The Concourse	Singapore 199555	+65-6291-1318	+65-6291-1332
Japan	2-3-1 Minato Mirai, Queen's Tower A 14F, Nishi-ku	Yokohama, Kanagawa 220-8543 Japan	+81-45-224-6616	+81-45-224-6716
UK/EMEIA	1st Floor, 3 Lockside Place, Mill Lane	Newbury, Berks RG14 5QS UK	+44 1635 524455	+44 1635 524466
France/Southern Europe	10, avenue du Quebec, Villebon BP116	Courtaboeuf Cedex 91944 France	+33 (0) 1-6092-4190	+33 (0) 1-6092-4189
New Zealand	Office 2, CML Building 2 Perry Street	Masterton New Zealand	+ 64-6-378-9799	+ 64-6-378-9599

Revision History

Revision	Date	Summary of Changes
1.0	06/30/05	First released Preliminary Information
1.1	07/19/05	Updated General Description, Functional Diagram, Pin Description and Features. Added this Revision History Table, Repeater mode and Loopback support sections.
1.2	08/08/05	Updated Tables, timing and body text.
1.3	10/04/05	Updated Power Saving bit description in P1/2PHYCTRL and P1/2SCSLMD registers
1.4	11/01/05	Updated Figure 16/17/18 Asynchronous Timing and Table 24/25/26 parameters, PQFP package information

Content

General Description 1
Functional Diagram 1
Features 2
Applications 2
Markets 2
Ordering Information 3
Contacts 3
Revision History 3
Content 4
List of Figures 8
List of Tables 9
Pin Configuration for KSZ8842-16 Switches (8/16-Bit) 10
Pin Description for KSZ8842-16 Switches (8/16-Bit) 11
Pin Configuration for KSZ8842-32 Switches (32-Bit) 16
Pin Description for KSZ8842-32 Switches (32-Bit) 17
Functional Description 22
Functional Overview: Physical Layer Transceiver 22
100BASE-TX Transmit 22
100BASE-TX Receive 22
Scrambler/De-scrambler (100BASE-TX Only) 22
10BASE-T Transmit 22
10BASE-T Receive 22
Power Management 23
MDI/MDI-X Auto Crossover 23
Straight Cable *23*
Crossover Cable *24*
Auto Negotiation 24
LinkMD Cable Diagnostics 25
Access *25*
Usage *26*
Functional Overview: MAC and Switch 26
Address Lookup 26
Learning 26
Migration 26
Aging 26
Forwarding 27
Switching Engine 29
MAC Operation 29
Inter Packet Gap (IPG) 29
Back-Off Algorithm 29
Late Collision 29
legal Packet Size 29
Flow Control 29
Half-Duplex Backpressure 29
Broadcast Storm Protection 30
Repeater Mode 30
Clock Generator 30

Bus Interface Unit (BIU) 30
Asynchronous Interface 32
Synchronous Interface 33
Summary 33
BIU Implementation Principles 34
Queue Management Unit (QMU) 35
Transmit Queue (TXQ) Frame Format 35
Receive Queue (RXQ) Frame Format 36
Advanced Switch Functions 38
Spanning Tree Support 38
IGMP Support 39
"IGMP" Snooping 39
"Multicast Address Insertion" in the Static MAC Table 39
IPv6 MLD Snooping 39
Port Mirroring Support 39
IEEE 802.1Q VLAN Support 40
QoS Priority Support 40
Port-Based Priority 40
802.1p-Based Priority 40
DiffServ based Priority 41
Rate Limiting Support 41
MAC Filtering Function 42
Configuration Interface 42
EEPROM Interface 42
Loopback Support 43
Far-end Loopback 43
Near-end (Remote) Loopback 43
CPU Interface I/O Registers 45
I/O Registers 45
Internal I/O Space Mapping 46
Register Map: Switch & MAC/PHY 54
Bit Type Definition 54
Bank 0-63 Bank Select Register (0x0E): BSR (same location in all Banks) 54
Bank 0 Base Address Register (0x00): BAR 54
Bank 0 Bus Error Status Register (0x06): BESR 55
Bank 0 Bus Burst Length Register (0x08): BBLR 55
Bank 1: Reserved 55
Bank 2 Host MAC Address Register Low (0x00): MARL 55
Bank 2 Host MAC Address Register Middle (0x02): MARM 56
Bank 2 Host MAC Address Register High (0x04): MARH 56
Bank 3 On-Chip Bus Control Register (0x00): OBCR 56
Bank 3 EEPROM Control Register (0x02): EEPCR 57
Bank 3 Memory BIST INFO Register (0x04): MBIR 57
Bank 3 Global Reset Register (0x06): GRR 57
Bank 3 Bus Configuration Register (0x08): BCFG 58
Banks 4—15: Reserved 58
Bank 16 Transmit Control Register (0x00): TXCR 58
Bank 16 Transmit Status Register (0x02): TXSR 58
Bank 16 Receive Control Register (0x04): RXCR 59
Bank 16 TXQ Memory Information Register (0x08): TXMIR 59
Bank 16 RXQ Memory Information Register (0x0A): RXMIR 60
Bank 17 TXQ Command Register (0x00): TXQCR 60
Bank 17 RXQ Command Register (0x02): RXQCR 60
Bank 17 TX Frame Data Pointer Register (0x04): TXFDPR 60
Bank 17 RX Frame Data Pointer Register (0x06): RXFDPR 61
Bank 17 QMU Data Register Low (0x08): QDRL 61
Bank 17 QMU Data Register High (0x0A): QDRH 61
Bank 18 Interrupt Enable Register (0x00): IER 62
Bank 18 Interrupt Status Register (0x02): ISR 63
Bank 18 Receive Status Register (0x04): RXSR 64

Bank 18 Receive Byte Counter Register (0x06): RXBC....64
Bank 19 Multicast Table Register 0 (0x00): MTR0....65
Bank 19 Multicast Table Register 1 (0x02): MTR1....65
Bank 19 Multicast Table Register 2 (0x04): MTR2....65
Bank 19 Multicast Table Register 3 (0x06): MTR3....65
Banks 20 – 31: Reserved....65
Bank 32 Switch ID and Enable Register (0x00): SIDER....66
Bank 32 Switch Global Control Register 1 (0x02): SGCR1....66
Bank 32 Switch Global Control Register 2 (0x04): SGCR2....67
Bank 32 Switch Global Control Register 3 (0x06): SGCR3....68
Bank 32 Switch Global Control Register 4 (0x08): SGCR4....69
Bank 32 Switch Global Control Register 5 (0x0A): SGCR5....69
Bank 33 Switch Global Control Register 6 (0x00): SGCR6....70
Bank 33 Switch Global Control Register 7 (0x02): SGCR7....70
Banks 34 – 38: Reserved....70
Bank 39 MAC Address Register 1 (0x00): MACAR1....71
Bank 39 MAC Address Register 2 (0x02): MACAR2....71
Bank 39 MAC Address Register 3 (0x04): MACAR3....71
Bank 40 TOS Priority Control Register 1 (0x00): TOSR1....71
Bank 40 TOS Priority Control Register 2 (0x02): TOSR2....72
Bank 40 TOS Priority Control Register 3 (0x04): TOSR3....72
Bank 40 TOS Priority Control Register 4 (0x06): TOSR4....73
Bank 40 TOS Priority Control Register 5 (0x08): TOSR5....73
Bank 40 TOS Priority Control Register 6 (0x0A): TOSR6....74
Bank 41 TOS Priority Control Register 7 (0x00): TOSR7....74
Bank 41 TOS Priority Control Register 8 (0x02): TOSR8....75
Bank 42 Indirect Access Control Register (0x00): IACR....75
Bank 42 Indirect Access Data Register 1 (0x02): IADR1....75
Bank 42 Indirect Access Data Register 2 (0x04): IADR2....76
Bank 42 Indirect Access Data Register 3 (0x06): IADR3....76
Bank 42 Indirect Access Data Register 4 (0x08): IADR4....76
Bank 42 Indirect Access Data Register 5 (0x0A): IADR5....76
Bank 43: Reserved....76
Bank 44 Digital Testing Status Register (0x00): DTSR....76
Bank 44 Analog Testing Status Register (0x02): ATSR....76
Bank 44 Digital Testing Control Register (0x04): DTCR....77
Bank 44 Analog Testing Control Register 0 (0x06): ATCR0....77
Bank 44 Analog Testing Control Register 1 (0x08): ATCR1....77
Bank 44 Analog Testing Control Register 2 (0x0A): ATCR2....77
Bank 45 PHY 1 MII-Register Basic Control Register (0x00): P1MBCR....77
Bank 45 PHY 1 MII-Register Basic Status Register (0x02): P1MBSR....78
Bank 45 PHY 1 PHYID Low Register (0x04): PHY1ILR....79
Bank 45 PHY 1 PHYID High Register (0x06): PHY1IHR....79
Bank 45 PHY 1 Auto-Negotiation Advertisement Register (0x08): P1ANAR....79
Bank 45 PHY 1 Auto-Negotiation Link Partner Ability Register (0x0A): P1ANLPR....80
Bank 46 PHY 2 MII-Register Basic Control Register (0x00): P2MBCR....80
Bank 46 PHY 2 MII-Register Basic Status Register (0x02): P2MBSR....81
Bank 46 PHY 2 PHYID Low Register (0x04): PHY2ILR....82
Bank 46 PHY 2 PHYID High Register (0x06): PHY2IHR....82
Bank 46 PHY 2 Auto-Negotiation Advertisement Register (0x08): P2ANAR....83
Bank 46 PHY 2 Auto-Negotiation Link Partner Ability Register (0x0A): P2ANLPR....83
Bank 47 PHY1 LinkMD Control/Status (0x00): P1VCT....84
Bank 47 PHY1 Special Control/Status Register (0x02): P1PHYCTRL....84
Bank 47 PHY2 LinkMD Control/Status (0x04): P2VCT....85
Bank 47 PHY2 Special Control/Status Register (0x06): P2PHYCTRL....85
Bank 48 Port 1 Control Register 1 (0x00): P1CR1....86
Bank 48 Port 1 Control Register 2 (0x02): P1CR2....87
Bank 48 Port 1 VID Control Register (0x04): P1VIDCR....88
Bank 48 Port 1 Control Register 3 (0x06): P1CR3....88
Bank 48 Port 1 Ingress Rate Control Register (0x08): P1IRCR....89
Bank 48 Port 1 Egress Rate Control Register (0x0A): P1ERCR....91
Bank 49 Port 1 PHY Special Control/Status, LinkMD (0x00): P1SCSLMD....93
Bank 49 Port 1 Control Register 4 (0x02): P1CR4....94

Bank 49 Port 1 Status Register (0x04): P1SR 95
Bank 50 Port 2 Control Register 1 (0x00): P2CR1....96
Bank 50 Port 2 Control Register 2 (0x02): P2CR2....96
Bank 50 Port 2 VID Control Register (0x04): P2VIDCR....96
Bank 50 Port 2 Control Register 3 (0x06): P2CR3....96
Bank 50 Port 2 Ingress Rate Control Register (0x08): P2IRCR....96
Bank 50 Port 2 Egress Rate Control Register (0x0A): P2ERCR....96
Bank 51 Port 2 PHY Special Control/Status, LinkMD (0x00): P2SCSLMD....97
Bank 51 Port 2 Control Register 4 (0x02): P2CR4....98
Bank 51 Port 2 Status Register (0x04): P2SR 99
Bank 52 Host Port Control Register 1 (0x00): P3CR1 100
Bank 52 Host Port Control Register 2 (0x02): P3CR2 100
Bank 52 Host Port VID Control Register (0x04): P3VIDCR 101
Bank 52 Host Port Control Register 3 (0x06): P3CR3 101
Bank 52 Host Port Ingress Rate Control Register (0x08): P3IRCR 101
Bank 52 Host Port Egress Rate Control Register (0x0A): P3ERCR 101
Banks 53 – 63: Reserved....101

MIB (Management Information Base) Counters 102

Format of “All Port Dropped Packet” MIB Counters 103
Additional MIB Information....104

Static MAC Address Table 105

Static MAC Table Lookup Examples:....105

Dynamic MAC Address Table 106

Dynamic MAC Address Lookup Example: 106

VLAN Table.... 107

VLAN Table Lookup Examples: 107

Absolute Maximum Ratings(1) 108

Operating Ratings(1) 108

Electrical Characteristics(1) 109

Timing Specifications.... 110

Asynchronous Timing without using Address Strobe (ADSN = 0)....110
Asynchronous Timing using Address Strobe (ADSN) 111
Asynchronous Timing using DATACSN....112
Address Latching Timing for All Modes....113
Synchronous Timing in Burst Write (VLBUSN = 1) 114
Synchronous Timing in Burst Read (VLBUSN = 1)....115
Synchronous Write Timing (VLBUSN = 0) 116
Synchronous Read Timing (VLBUSN = 0) 117
EEPROM Timing....118
Auto Negotiation Timing....119
Reset Timing....120

Selection of Isolation Transformers.... 121

Selection of Reference Crystal 121

Package Information.... 122

Acronyms and Glossary.... 124

List of Figures

Figure 1. KSZ8842M Functional Diagram 1
Figure 2. Standard – KSZ8842-16 MQL 128-Pin PQFP (Top View) 10
Figure 3. Option – KSZ8842-16 MVL 128-Pin LQFP (Top View) 10
Figure 4. Standard – KSZ8842-32 MQL 128-Pin PQFP (Top View) 16
Figure 5. Option – KSZ8842-32 MVL 128-Pin LQFP (Top View) 16
Figure 6. Typical Straight Cable Connection 23
Figure 7. Typical Crossover Cable Connection 24
Figure 8. Auto Negotiation and Parallel Operation 25
Figure 9. Destination Address Lookup Flow Chart in Stage One 27
Figure 10. Destination Address Resolution Flow Chart in Stage Two 28
Figure 11. Mapping from ISA-like, EISA-like, and VLBus-like transactions to the KSZ8842M Bus 34
Figure 12. KSZ8842M 8-Bit, 16-Bit, and 32-Bit Data Bus Connections 34
Figure 13. 802.1p Priority Field Format 41
Figure 14. Port 2 Far-End Loopback Path 44
Figure 15. Port 1 and port 2 Near-End (Remote) Loopback Path 44
Figure 16. Asynchronous Cycle – ADSN = 0 110
Figure 17. Asynchronous Cycle – Using ADSN 111
Figure 18. Asynchronous Cycle – Using DATACSN 112
Figure 19. Address Latching Cycle for All Modes 113
Figure 20. Synchronous Burst Write Cycles – VLBUSN = 1 114
Figure 21. Synchronous Burst Read Cycles – VLBUSN = 1 115
Figure 22. Synchronous Write Cycle – VLBUSN = 0 116
Figure 23. Synchronous Read Cycle – VLBUSN = 0 117
Figure 24. EEPROM Read Cycle Timing Diagram 118
Figure 25. Auto-Negotiation Timing 119
Figure 26. Reset Timing 120
Figure 27. 128-Pin PQFP Package 122
Figure 28. Optional 128-Pin LQFP Package 123

List of Tables

Table 1. MDI/MDI-X Pin Definitions 23
Table 2. Bus Interface Unit Signal Grouping 32
Table 3: Transmit Queue Frame Format 35
Table 4. Transmit Control Word Bit Fields 36
Table 5. Transmit Byte Count Format 36
Table 6: Receive Queue Frame Format 36
Table 7. FRXQ Packet Receive Status 37
Table 8. FRXQ RX Byte Count Field 37
Table 9: Spanning Tree States 38
Table 10. FID+DA Lookup in VLAN Mode 40
Table 11. FID+SA Lookup in VLAN Mode 40
Table 12. EEPROM Format 42
Table 13. ConfigParam Word in EEPROM Format 43
Table 14. Format of Per Port MIB Counters 102
Table 15. Port 1 MIB Counters Indirect Memory Offset 103
Table 16. “All Port Dropped Packet” MIB Counters Format 103
Table 17. “All Port Dropped Packet” MIB Counters Indirect Memory Offsets 103
Table 18. Static MAC Table Format 105
Table 19. Dynamic MAC Address Table Format 106
Table 20. VLAN Table Format 107
Table 21. Maximum Ratings 108
Table 22. Operating Ratings 108
Table 23. Electrical Characteristics 109
Table 24. Asynchronous Cycle – ADSN = 0 Timing Parameters 110
Table 25. Asynchronous Cycle – ADSN Timing Parameters 111
Table 26. Asynchronous – DATACSN Timing Parameters 112
Table 27. Address Latching Timing Parameters 113
Table 28. Synchronous Burst Write Timing Parameters 114
Table 29. Synchronous Burst Read Timing Parameters 115
Table 30. Synchronous Write Timing Parameters 116
Table 31. Synchronous Read Timing Parameters 117
Table 32. EEPROM Timing Parameters 118
Table 33. Auto Negotiation Timing Parameters 119
Table 34. Reset Timing Parameters 120
Table 35. Transformer Selection Criteria 121
Table 36. Qualified Single Port Magnetic 121
Table 37. Typical Reference Crystal Characteristics 121

Pin Configuration for KSZ8842-16 Switches (8/16-Bit)

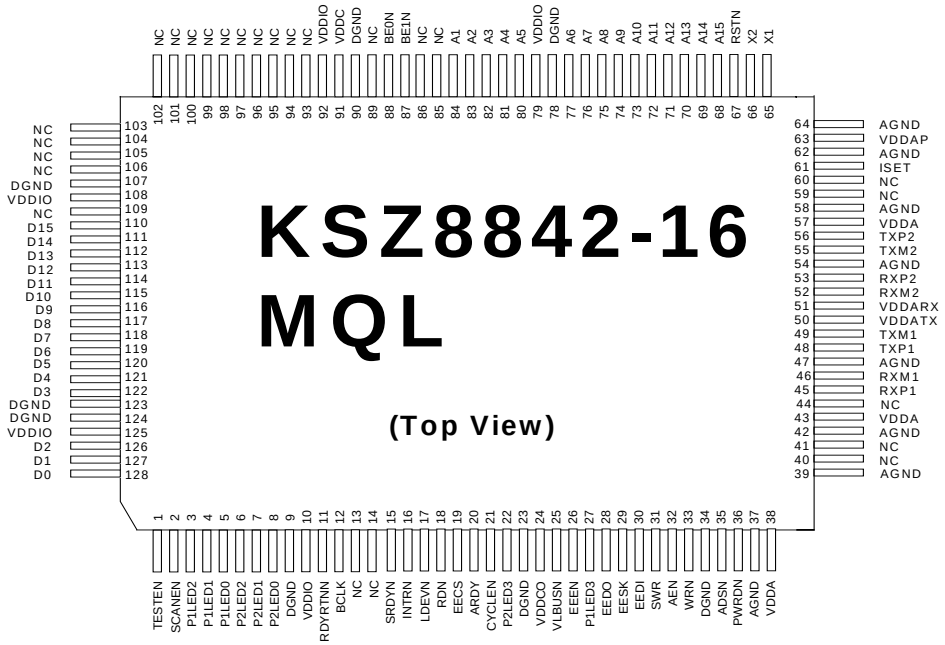

Figure 2. Standard – KSZ8842-16 MQL 128-Pin PQFP (Top View)

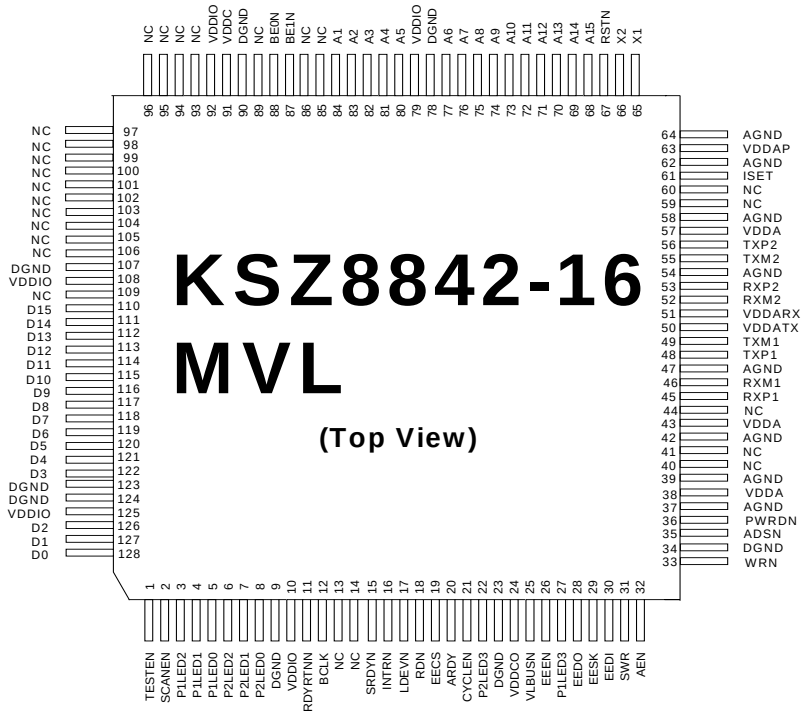

Figure 3. Option – KSZ8842-16 MVL 128-Pin LQFP (Top View)

Pin Description for KSZ8842-16 Switches (8/16-Bit)

<table>
<tr><th>Pin Number</th><th>Pin Name</th><th>Type</th><th>Pin Function</th></tr>
<tr><td>1</td><td>TEST_EN</td><td>I</td><td>Test Enable
For normal operation, pull-down this pin to ground.</td></tr>
<tr><td>2</td><td>SCAN_EN</td><td>I</td><td>Scan Test Scan Mux Enable
For normal operation, pull-down this pin to ground.</td></tr>
<tr><td>3</td><td>P1LED2</td><td>Opu</td><td rowspan="9">Port 1 and Port 2 LED indicators[1] defined as follows:
<table>
<tr><th></th><th colspan="2">Switch Global Control Register 5: SGCR5 bit [15,9]</th></tr>
<tr><th></th><th>[0,0] Default</th><th>[0,1]</th></tr>
<tr><td>P1LED3[2] /P2LED3</td><td>—</td><td>—</td></tr>
<tr><td>P1LED2/P2LED2</td><td>Link/Act</td><td>100Link/Act</td></tr>
<tr><td>P1LED1/P2LED1</td><td>Full duplex/Col</td><td>10Link/Act</td></tr>
<tr><td>P1LED0/P2LED0</td><td>Speed</td><td>Full duplex</td></tr>
</table>
<table>
<tr><th></th><th colspan="2">Reg. SGCR5 bit [15,9]</th></tr>
<tr><th></th><th>[1,0]</th><th>[1,1]</th></tr>
<tr><td>P1LED3[2] /P2LED3</td><td>Act</td><td>—</td></tr>
<tr><td>P1LED2/P2LED2</td><td>Link</td><td>—</td></tr>
<tr><td>P1LED1/P2LED1</td><td>Full duplex/Col</td><td>—</td></tr>
<tr><td>P1LED0/P2LED0</td><td>Speed</td><td>—</td></tr>
</table>
Notes:
1. Link = On; Activity = Blink; Link/Act = On/Blink; Full Dup/Col = On/Blink;
Full Duplex = On (Full duplex); Off (Half duplex)
Speed = On (100BASE-T); Off (10BASE-T)
2. P1LED3 is pin 27. P2LED3 is pin 22.
Port 1 and Port 2 LED indicators[3] for Repeater mode defined as follows:
<table>
<tr><th></th><th colspan="2">Switch Global Control Register 5: SGCR5 bit [15,9]</th></tr>
<tr><th></th><th>[0,0] Default</th><th>[0,1] [1,0] [1,1]</th></tr>
<tr><td>P1LED3, P2LED3</td><td>RPT_COL, RPT_ACT</td><td>—</td></tr>
<tr><td>P1LED2, P2LED2</td><td>RPT_Link3/RX, RPT_ERR3</td><td>—</td></tr>
<tr><td>P1LED1, P2LED1</td><td>RPT_Link2/RX, RPT_ERR2</td><td>—</td></tr>
<tr><td>P1LED0, P2LED0</td><td>RPT_Link1/RX, RPT_ERR1</td><td>—</td></tr>
</table>
Note 3: RPT_COL = Blink; RPT_Link3/RX (Host port) = On/Blink;
RPT_Link2/RX (Port 2) = On/Blink; RPT_Link1/RX (Port 1) = On/Blink;
RPT_ACT = on if any activity, RPT_ERR3/2/1 = RX error on port 3, 2, or 1.</td></tr>
<tr><td>4</td><td>P1LED1</td><td>Opu</td></tr>
<tr><td>5</td><td>P1LED0</td><td>Opu</td></tr>
<tr><td>6</td><td>P2LED2</td><td>Opu</td></tr>
<tr><td>7</td><td>P2LED1</td><td>Opu</td></tr>
<tr><td>8</td><td>P2LED0</td><td>Opu</td></tr>
<tr><td>9</td><td>DGND</td><td>Gnd</td><td>Digital ground</td></tr>
<tr><td>10</td><td>VDDIO</td><td>P</td><td>3.3V digital V_{DDIO} input power supply for IO with well decoupling capacitors.</td></tr>
<tr><td>11</td><td>RDYRTNN</td><td>Ipd</td><td>Ready Return Not:
For VLBus-like mode: Asserted by the host to complete synchronous read cycles. If the host doesn’t connect to this pin, assert this pin.
For burst mode (32-bit interface only): Host drives this pin low to signal waiting states.</td></tr>
</table>

Pin Number	Pin Name	Type	Pin Function
12	BCLK	Ipd	Bus Interface Clock Local bus clock for synchronous bus systems. Maximum frequency is 50MHz. This pin should be tied Low or unconnected if it is in asynchronous mode.
13	NC	Ipu	No connect.
14	NC	Opu	No connect.
15	SRDYN	Opu	Synchronous Ready Not Ready signal to interface with synchronous bus for both EISA-like and VLBus-like extend accesses. For VLBus-like mode, the falling edge of this signal indicates ready. This signal is synchronous to the bus clock signal BCLK. For burst mode (32-bit interface only), the KSZ8842M drives this pin low to signal wait states.
16	INTRN	Opd	Interrupt Active Low signal to host CPU to indicate an interrupt status bit is set, this pin need an external 4.7K pull-up resistor.
17	LDEVN	Opd	Local Device Not Active Low output signal, asserted when AEN is Low and A15-A4 decode to the KSZ8842M address programmed into the high byte of the base address register. LDEVN is a combinational decode of the Address and AEN signal.
18	RDN	Ipd	Read Strobe Not Asynchronous read strobe, active Low.
19	EECS	Opu	EEPROM Chip Select
20	ARDY	Opd	Asynchronous Ready ARDY may be used when interfacing asynchronous buses to extend bus access cycles. It is asynchronous to the host CPU or bus clock.
21	CYCLEN	Ipd	Cycle Not For VLBus-like mode cycle signal; this pin follows the addressing cycle to signal the command cycle. For burst mode (32-bit interface only), this pin stays High for read cycles and Low for write cycles.
22	P2LED3	Opd	Port 2 LED indicator See the description in pins 6, 7, and 8.
23	DGND	Gnd	Digital IO ground
24	VDDCO	P	1.2V digital core voltage output (internal 1.2V LDO power supply output), this 1.2V output pin provides power to VDDC, VDDA and VDDAP pins. Note: Internally generated power voltage. Do not connect an external power supply to this pin. This pin is used for connecting external filter (Ferrite bead and capacitors).
25	VLBUSN	Ipd	VLBus-like Mode Pull-down or float: Bus interface is configured for synchronous mode. Pull-up: Bus interface is configured for 8-bit or 16-bit asynchronous mode or EISA-like burst mode.
26	EEEN	Ipd	EEPROM Enable EEPROM is enabled and connected when this pin is pull-up. EEPROM is disabled when this pin is pull-down or no connect.
27	P1LED3	Opd	Port 1 LED indicator See the description in pins 3, 4, and 5.

Pin Number	Pin Name	Type	Pin Function
28	EEDO	Opd	EEPROM Data Out This pin is connected to DI input of the serial EEPROM.
29	EESK	Opd	EEPROM Serial Clock A 4µs serial output clock to load configuration data from the serial EEPROM.
30	EEDI	Ipd	EEPROM Data In This pin is connected to DO output of the serial EEPROM when EEEN is pull-up. This pin can be pull-down for 8-bit bus mode, pull-up for 16-bus mode or don't care for 32-bus mode when EEEN is pull-down (without EEPROM).
31	SWR	Ipd	Synchronous Write/Read Write/Read signal for synchronous bus accesses. Write cycles when high and Read cycles when low.
32	AEN	Ipd	Address Enable Address qualifier for the address decoding, active Low.
33	WRN	Ipd	Write Strobe Not Asynchronous write strobe, active Low.
34	DGND	Gnd	Digital IO ground
35	ADSN	Ipd	Address Strobe Not For systems that require address latching, the rising edge of ADSN indicates the latching moment of A15-A1 and AEN.
36	PWRDN	I	Full-chip power-down. Active Low (Low = Power down; High = Normal operation).
37	AGND	Gnd	Analog ground
38	VDDA	P	1.2V analog V_{DD} input power supply from VDDCO (pin24) through external Ferrite bead and capacitor.
39	AGND	Gnd	Analog ground
40	NC	—	No connect
41	NC	—	No connect
42	AGND	Gnd	Analog ground
43	VDDA	P	1.2V analog V_{DD} input power supply from VDDCO (pin24) through external Ferrite bead and capacitor.
44	NC	—	No connect
45	RXP1	I/O	Port 1 physical receive (MDI) or transmit (MDIX) signal (+ differential)
46	RXM1	I/O	Port 1 physical receive (MDI) or transmit (MDIX) signal (– differential)
47	AGND	Gnd	Analog ground
48	TXP1	I/O	Port 1 physical transmit (MDI) or receive (MDIX) signal (+ differential)
49	TXM1	I/O	Port 1 physical transmit (MDI) or receive (MDIX) signal (– differential)
50	VDDATX	P	3.3V analog V_{DD} input power supply with well decoupling capacitors.
51	VDDARX	P	3.3V analog V_{DD} input power supply with well decoupling capacitors.
52	RXM2	I/O	Port 2 physical receive (MDI) or transmit (MDIX) signal (- differential)
53	RXP2	I/O	Port 2 physical receive (MDI)or transmit (MDIX) signal (+ differential)
54	AGND	Gnd	Analog ground
55	TXM2	I/O	Port 2 physical receive (MDI) or transmit (MDIX) signal (- differential)
56	TXP2	I/O	Port 2 physical receive (MDI) or transmit (MDIX) signal (+ differential)
57	VDDA	P	1.2 analog V_{DD} input power supply from VDDCO (pin24) through external Ferrite

Pin Number	Pin Name	Type	Pin Function
			bead and capacitor.
58	AGND	Gnd	Analog ground
59	NC	Ipu	No connect
60	NC	Ipu	No connect
61	ISET	O	Set physical transmits output current. Pull-down this pin with a 3.01K 1% resistor to ground.
62	AGND	Gnd	Analog ground
63	VDDAP	P	1.2V analog V_{DD} for PLL input power supply from VDDCO (pin24) through external Ferrite bead and capacitor.
64	AGND	Gnd	Analog ground
65	X1	I	25MHz crystal or oscillator clock connection.
66	X2	O	Pins (X1, X2) connect to a crystal. If an oscillator is used, X1 connects to a 3.3V tolerant oscillator and X2 is a no connect. Note: Clock requirement is ± 50ppm for either crystal or oscillator.
67	RSTN	Ipu	Hardware reset pin (active Low). This reset input is required minimum of 10ms low after stable supply voltage 3.3V.
68	A15	I	Address 15
69	A14	I	Address 14
70	A13	I	Address 13
71	A12	I	Address 12
72	A11	I	Address 11
73	A10	I	Address 10
74	A9	I	Address 9
75	A8	I	Address 8
76	A7	I	Address 7
77	A6	I	Address 6
78	DGND	Gnd	Digital IO ground
79	VDDIO	P	3.3V digital V_{DDIO} input power supply for IO with well decoupling capacitors.
80	A5	I	Address 5
81	A4	I	Address 4
82	A3	I	Address 3
83	A2	I	Address 2
84	A1	I	Address 1
85	NC	I	No Connect
86	NC	I	No Connect
87	BE1N	I	Byte Enable 1 Not, Active low for Data byte 1 enable (don’t care in 8-bit bus mode).
88	BE0N	I	Byte Enable 0 Not, Active low for Data byte 0 enable (there is an internal inverter enabled and connected to the BE1N for 8-bit bus mode).
89	NC	I	No Connect
90	DGND	Gnd	Digital core ground
91	VDDC	P	1.2V digital core V_{DD} input power supply from VDDCO (pin24) through external Ferrite bead and capacitor.
92	VDDIO	P	3.3V digital V_{DDIO} input power supply for IO with well decoupling capacitors.
93	NC	I	No Connect

Pin Number	Pin Name	Type	Pin Function
94	NC	I	No Connect
95	NC	I	No Connect
96	NC	I	No Connect
97	NC	I	No Connect
98	NC	I	No Connect
99	NC	I	No Connect
100	NC	I	No Connect
101	NC	I	No Connect
102	NC	I	No Connect
103	NC	I	No Connect
104	NC	I	No Connect
105	NC	I	No Connect
106	NC	I	No Connect
107	DGND	Gnd	Digital IO ground
108	VDDIO	P	3.3V digital V_{DDIO} input power supply for IO with well decoupling capacitors.
109	NC	I	No Connect
110	D15	I/O	Data 15
111	D14	I/O	Data 14
112	D13	I/O	Data 13
113	D12	I/O	Data 12
114	D11	I/O	Data 11
115	D10	I/O	Data 10
116	D9	I/O	Data 9
117	D8	I/O	Data 8
118	D7	I/O	Data 7
119	D6	I/O	Data 6
120	D5	I/O	Data 5
121	D4	I/O	Data 4
122	D3	I/O	Data 3
123	DGND	Gnd	Digital IO ground
124	DGND	Gnd	Digital core ground
125	VDDIO	P	3.3V digital V_{DDIO} input power supply for IO with well decoupling capacitors.
126	D2	I/O	Data 2
127	D1	I/O	Data 1
128	D0	I/O	Data 0

Legend:
P = Power supply Gnd = Ground.
I/O = Bi-directional I = Input O = Output.
Ipd = Input with internal pull-down.
Ipu = Input with internal pull-up.
Opd = Output with internal pull-down.
Opu = Output with internal pull-up.

Pin Configuration for KSZ8842-32 Switches (32-Bit)

Figure 4. Standard – KSZ8842-32 MQL 128-Pin PQFP (Top View)

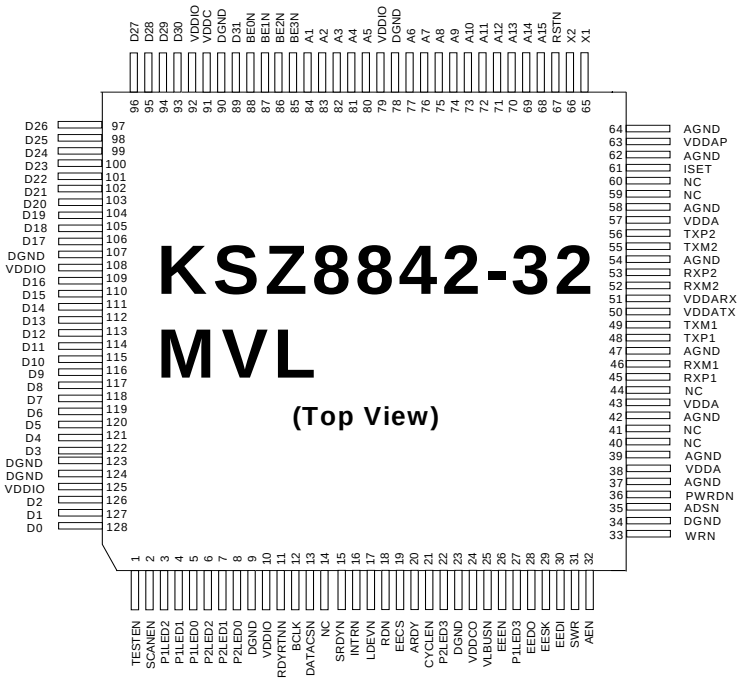

Figure 5. Option – KSZ8842-32 MVL 128-Pin LQFP (Top View)

Pin Description for KSZ8842-32 Switches (32-Bit)

<table>
<tr><th>Pin Number</th><th>Pin Name</th><th>Type</th><th>Pin Function</th></tr>
<tr><td>1</td><td>TEST_EN</td><td>I</td><td>Test Enable
For normal operation, pull-down this pin to ground.</td></tr>
<tr><td>2</td><td>SCAN_EN</td><td>I</td><td>Scan Test Scan Mux Enable
For normal operation, pull-down this pin to ground.</td></tr>
<tr><td>3</td><td>P1LED2</td><td>Opu</td><td rowspan="8">Port 1 and Port 2 LED indicators[1] defined as follows:
<table>
<tr><th></th><th colspan="2">Switch Global Control Register 5: SGCR5 bit [15,9]</th></tr>
<tr><th></th><th>[0,0] Default</th><th>[0,1]</th></tr>
<tr><td>P1LED3[2] /P2LED3</td><td>—</td><td>—</td></tr>
<tr><td>P1LED2/P2LED2</td><td>Link/Act</td><td>100Link/Act</td></tr>
<tr><td>P1LED1/P2LED1</td><td>Full duplex/Col</td><td>10Link/Act</td></tr>
<tr><td>P1LED0/P2LED0</td><td>Speed</td><td>Full duplex</td></tr>
</table>
<table>
<tr><th></th><th colspan="2">Reg. SGCR5 bit [15,9]</th></tr>
<tr><th></th><th>[1,0]</th><th>[1,1]</th></tr>
<tr><td>P1LED3[2] /P2LED3</td><td>Act</td><td>—</td></tr>
<tr><td>P1LED2/P2LED2</td><td>Link</td><td>—</td></tr>
<tr><td>P1LED1/P2LED1</td><td>Full duplex/Col</td><td>—</td></tr>
<tr><td>P1LED0/P2LED0</td><td>Speed</td><td>—</td></tr>
</table>
Notes:
1. Link = On; Activity = Blink; Link/Act = On/Blink; Full Dup/Col = On/Blink;
Full Duplex = On (Full duplex); Off (Half duplex)
Speed = On (100BASE-T); Off (10BASE-T)
2. P1LED3 is pin 27. P2LED3 is pin 22.
Port 1 and Port 2 LED indicators[3] for Repeater mode defined as follows:
<table>
<tr><th></th><th colspan="2">Switch Global Control Register 5: SGCR5 bit [15,9]</th></tr>
<tr><th></th><th>[0,0] Default</th><th>[0,1] [1,0] [1,1]</th></tr>
<tr><td>P1LED3; P2LED3</td><td>RPT_COL; RPT_ACT</td><td>—</td></tr>
<tr><td>P1LED2; P2LED2</td><td>RPT_Link3/RX; RPT_ERR3</td><td>—</td></tr>
<tr><td>P1LED1; P2LED1</td><td>RPT_Link2/RX; RPT_ERR2</td><td>—</td></tr>
<tr><td>P1LED0; P2LED0</td><td>RPT_Link1/RX; RPT_ERR1</td><td>—</td></tr>
</table>
Note 3: RPT_COL = Blink; RPT_Link3/RX (Host port) = On/Blink;
RPT_Link2/RX (Port 2) = On/Blink; RPT_Link1/RX (Port 1) = On/Blink;
RPT_ACT = on if any activity, RPT_ERR3/2/1 = RX error on port 3, 2, or 1.</td></tr>
<tr><td>4</td><td>P1LED1</td><td>Opu</td></tr>
<tr><td>5</td><td>P1LED0</td><td>Opu</td></tr>
<tr><td>6</td><td>P2LED2</td><td>Opu</td></tr>
<tr><td>7</td><td>P2LED1</td><td>Opu</td></tr>
<tr><td>8</td><td>P2LED0</td><td>Opu</td></tr>
<tr><td>9</td><td>DGND</td><td>Gnd</td><td>Digital ground</td></tr>
<tr><td>10</td><td>VDDIO</td><td>P</td><td>3.3V digital V_{DDIO} input power supply for IO with well decoupling capacitors.</td></tr>
<tr><td>11</td><td>RDYRTNN</td><td>Ipd</td><td>Ready Return Not
For VLBus-like mode: Asserted by the host to complete synchronous read cycles. If the host doesn’t connect to this pin, assert this pin.
For burst mode (32-bit interface only): Host drives this pin low to signal waiting states.</td></tr>
</table>

Pin Number	Pin Name	Type	Pin Function
12	BCLK	Ipd	Bus Interface Clock Local bus clock for synchronous bus systems. Maximum frequency is 50MHz. This pin should be tied Low or unconnected if it is in asynchronous mode.
13	DATACSN	Ipu	DATA Chip Select Not (For KSZ8842-32 Mode only) Chip select signal for QMU data register (QDRH, QDRL), active Low. When DATACSN is Low, the data path can be accessed regardless of the value of AEN, A15-A1, and the content of the BANK select register.
14	NC	Opu	No connect.
15	SRDYN	Opu	Synchronous Ready Not Ready signal to interface with synchronous bus for both EISA-like and VLBus-like extend accesses. For VLBus-like mode, the falling edge of this signal indicates ready. This signal is synchronous to the bus clock signal BCLK. For burst mode (32-bit interface only), the KSZ8842M drives this pin low to signal wait states.
16	INTRN	Opd	Interrupt Active Low signal to host CPU to indicate an interrupt status bit is set, this pin need an external 4.7K pull-up resistor.
17	LDEVN	Opd	Local Device Not Active Low output signal, asserted when AEN is Low and A15-A4 decode to the KSZ8842M address programmed into the high byte of the base address register. LDEVN is a combinational decode of the Address and AEN signal.
18	RDN	Ipd	Read Strobe Not Asynchronous read strobe, active Low.
19	EECS	Opu	EEPROM Chip Select
20	ARDY	Opd	Asynchronous Ready ARDY may be used when interfacing asynchronous buses to extend bus access cycles. It is asynchronous to the host CPU or bus clock.
21	CYCLEN	Ipd	Cycle Not For VLBus-like mode cycle signal; this pin follows the addressing cycle to signal the command cycle. For burst mode (32-bit interface only), this pin stays High for read cycles and Low for write cycles.
22	P2LED3	Opd	Port 2 LED indicator. See the description in pins 6, 7, and 8.
23	DGND	Gnd	Digital IO ground
24	VDDCO	P	1.2V digital core voltage output (internal 1.2V LDO power supply output), this 1.2V output pin provides power to VDDC, VDDA and VDDAP pins. Note: Internally generated power voltage. Do not connect an external power supply to this pin. This pin is used for connecting external filter (Ferrite Bead and capacitors).
25	VLBUSN	Ipd	VLBus-like Mode Pull-down or float: Bus interface is configured for synchronous mode. Pull-up: Bus interface is configured for 32-bit asynchronous mode or EISA-like burst mode.
26	EEEN	Ipd	EEPROM Enable EEPROM is enabled and connected when this pin is pull-up. EEPROM is disabled when this pin is pull-down or no connect.

Pin Number	Pin Name	Type	Pin Function
27	P1LED3	Opd	Port 1 LED indicator See the description in pins 3, 4, and 5.
28	EEDO	Opd	EEPROM Data Out This pin is connected to DI input of the serial EEPROM.
29	EESK	Opd	EEPROM Serial Clock A 4µs serial output clock to load configuration data from the serial EEPROM.
30	EEDI	Ipd	EEPROM Data In This pin is connected to DO output of the serial EEPROM when EEEN is pull-up. This pin can be pull-down for 8-bit bus mode, pull-up for 16-bus mode or don't care for 32-bus mode when EEEN is pull-down (without EEPROM).
31	SWR	Ipd	Synchronous Write/Read Write/Read signal for synchronous bus accesses. Write cycles when high and Read cycles when low.
32	AEN	Ipd	Address Enable Address qualifier for the address decoding, active Low.
33	WRN	Ipd	Write Strobe Not Asynchronous write strobe, active Low.
34	DGND	Gnd	Digital IO ground
35	ADSN	Ipd	Address Strobe Not For systems that require address latching, the rising edge of ADSN indicates the latching moment of A15-A1 and AEN.
36	PWRDN	I	Full-chip power-down. Active Low (Low = Power down; High = Normal operation).
37	AGND	Gnd	Analog ground
38	VDDA	P	1.2V analog V_{DD} input power supply from VDDCO (pin24) through external Ferrite bead and capacitor.
39	AGND	Gnd	Analog ground
40	NC	—	No connect
41	NC	—	No connect
42	AGND	Gnd	Analog ground
43	VDDA	P	1.2V analog V_{DD} input power supply from VDDCO (pin24) through external Ferrite bead and capacitor.
44	NC	—	No connect
45	RXP1	I/O	Port 1 physical receive (MDI) or transmit (MDIX) signal (+ differential)
46	RXM1	I/O	Port 1 physical receive (MDI) or transmit (MDIX) signal (– differential)
47	AGND	Gnd	Analog ground
48	TXP1	I/O	Port 1 physical transmit (MDI) or receive (MDIX) signal (+ differential)
49	TXM1	I/O	Port 1 physical transmit (MDI) or receive (MDIX) signal (– differential)
50	VDDATX	P	3.3V analog V_{DD} input power supply with well decoupling capacitors.
51	VDDARX	P	3.3V analog V_{DD}
52	RXM2	I/O	Port 2 physical receive (MDI) or transmit (MDIX) signal (- differential)
53	RXP2	I/O	Port 2 physical receive (MDI) or transmit (MDIX) signal (+ differential)
54	AGND	Gnd	Analog ground
55	TXM2	I/O	Port 2 physical receive (MDI) or transmit (MDIX) signal (- differential)

Pin Number	Pin Name	Type	Pin Function
56	TXP2	I/O	Port 2 physical receive (MDI) or transmit (MDIX) signal (+ differential)
57	VDDA	P	1.2 analog V_{DD} input power supply from VDDCO (pin24) through external Ferrite bead and capacitor.
58	AGND	Gnd	Analog ground
59	NC	Ipu	No connect
60	NC	Ipu	No connect
61	ISET	O	Set physical transmits output current. Pull-down this pin with a 3.01K 1% resistor to ground.
62	AGND	Gnd	Analog ground
63	VDDAP	P	1.2V analog V_{DD} for PLL input power supply from VDDCO (pin24) through external Ferrite bead and capacitor.
64	AGND	Gnd	Analog ground
65	X1	I	25MHz crystal or oscillator clock connection.
66	X2	O	Pins (X1, X2) connect to a crystal. If an oscillator is used, X1 connects to a 3.3V tolerant oscillator and X2 is a no connect. Note: Clock is ± 50ppm for either crystal or oscillator.
67	RSTN	Ipu	Hardware reset pin (active Low). This reset input is required minimum of 10ms low after stable supply voltage 3.3V.
68	A15	I	Address 15
69	A14	I	Address 14
70	A13	I	Address 13
71	A12	I	Address 12
72	A11	I	Address 11
73	A10	I	Address 10
74	A9	I	Address 9
75	A8	I	Address 8
76	A7	I	Address 7
77	A6	I	Address 6
78	DGND	Gnd	Digital IO ground
79	VDDIO	P	3.3V digital V_{DDIO} input power supply for IO with well decoupling capacitors.
80	A5	I	Address 5
81	A4	I	Address 4
82	A3	I	Address 3
83	A2	I	Address 2
84	A1	I	Address 1
85	BE3N	I	Byte Enable 3 Not, Active low for Data byte 3 enable.
86	BE2N	I	Byte Enable 2 Not, Active low for Data byte 2 enable.
87	BE1N	I	Byte Enable 1 Not, Active low for Data byte 1 enable.
88	BE0N	I	Byte Enable 0 Not, Active low for Data byte 0 enable.
89	D31	I/O	Data 31
90	DGND	Gnd	Digital core ground
91	VDDC	P	1.2V digital core V_{DD} input power supply from VDDCO (pin24) through external Ferrite bead and capacitor.
92	VDDIO	P	3.3V digital V_{DDIO} input power supply for IO with well decoupling capacitors.

Pin Number	Pin Name	Type	Pin Function
93	D30	I/O	Data 30
94	D29	I/O	Data 29
95	D28	I/O	Data 28
96	D27	I/O	Data 27
97	D26	I/O	Data 26
98	D25	I/O	Data 25
99	D24	I/O	Data 24
100	D23	I/O	Data 23
101	D22	I/O	Data 22
102	D21	I/O	Data 21
103	D20	I/O	Data 20
104	D19	I/O	Data 19
105	D18	I/O	Data 18
106	D17	I/O	Data 17
107	DGND	Gnd	Digital IO ground
108	VDDIO	P	3.3V digital V_{DDIO} input power supply for IO with well decoupling capacitors.
109	D16	I/O	Data 16
110	D15	I/O	Data 15
111	D14	I/O	Data 14
112	D13	I/O	Data 13
113	D12	I/O	Data 12
114	D11	I/O	Data 11
115	D10	I/O	Data 10
116	D9	I/O	Data 9
117	D8	I/O	Data 8
118	D7	I/O	Data 7
119	D6	I/O	Data 6
120	D5	I/O	Data 5
121	D4	I/O	Data 4
122	D3	I/O	Data 3
123	DGND	Gnd	Digital IO ground
124	DGND	Gnd	Digital core ground
125	VDDIO	P	3.3V digital V_{DDIO} input power supply for IO with well decoupling capacitors.
126	D2	I/O	Data 2
127	D1	I/O	Data 1
128	D0	I/O	Data 0

Legend:
P = Power supply Gnd = Ground.
I/O = Bi-directional I = Input O = Output.
Ipd = Input with internal pull-down.
Ipu = Input with internal pull-up.
Opd = Output with internal pull-down.
Opu = Output with internal pull-up.

Functional Description

The KSZ8842M contains two 10/100 physical layer transceivers (PHYs), two MAC units, and a DMA channel integrated with a Layer-2 switch.

The KSZ8842M contains a bus interface unit (BIU), which controls the KSZ8842M via an 8, 16, or 32-bit host interface.

Physical signal transmission and reception are enhanced through the use of analog circuits in the PHY that make the design more efficient and allow for low power consumption.

Functional Overview: Physical Layer Transceiver

100BASE-TX Transmit

The 100BASE-TX transmit function performs parallel to serial conversion, 4B/5B coding, scrambling, NRZ-to-NRZI conversion, and MLT3 encoding and transmission.

The circuitry starts with a parallel-to-serial conversion, which converts the MII data from the MAC into a 125MHz serial bit stream. The data and control stream is then converted into 4B/5B coding, followed by a scrambler. The serialized data is further converted from NRZ-to-NRZI format, and then transmitted in MLT3 current output. The output current is set by an external1% 3.01KΩ resistor for the 1:1 transformer ratio.

The output signal has a typical rise/fall time of 4ns and complies with the ANSI TP-PMD standard regarding amplitude balance, overshoot, and timing jitter. The wave-shaped 10BASE-T output is also incorporated into the 100BASE-TX transmitter.

100BASE-TX Receive

The 100BASE-TX receiver function performs adaptive equalization, DC restoration, MLT3-to-NRZI conversion, data and clock recovery, NRZI-to-NRZ conversion, de-scrambling, 4B/5B decoding, and serial to parallel conversion.

The receiving side starts with the equalization filter to compensate for inter-symbol interference (ISI) over the twisted pair cable. Since the amplitude loss and phase distortion is a function of the cable length, the equalizer must adjust its characteristics to optimize performance. In this design, the variable equalizer makes an initial estimation based on comparisons of incoming signal strength against some known cable characteristics, and then tunes itself for optimization. This is an ongoing process and self-adjusts against environmental changes such as temperature variations.

Next, the equalized signal goes through a DC restoration and data conversion block. The DC restoration circuit is used to compensate for the effect of baseline wander and to improve the dynamic range. The differential data conversion circuit converts the MLT3 format back to NRZI. The slicing threshold is also adaptive.

The clock recovery circuit extracts the 125MHz clock from the edges of the NRZI signal. This recovered clock is then used to convert the NRZI signal into the NRZ format. This signal is sent through the de-scrambler followed by the 4B/5B decoder. Finally, the NRZ serial data is converted to the MII format and provided as the input data to the MAC.

Scrambler/De-scrambler (100BASE-TX only)

The purpose of the scrambler is to spread the power spectrum of the signal to reduce electromagnetic interference (EMI) and baseline wander. Transmitted data is scrambled through the use of an 11-bit wide linear feedback shift register (LFSR). The scrambler generates a 2047-bit non-repetitive sequence, and the receiver then de-scrambles the incoming data stream using the same sequence as at the transmitter.

10BASE-T Transmit

The 10BASE-T driver is incorporated with the 100BASE-TX driver to allow for transmission using the same magnetic. They are internally wave-shaped and pre-emphasized into outputs with a typical 2.3V amplitude. The harmonic contents are at least 27dB below the fundamental frequency when driven by an all-ones Manchester-encoded signal.

10BASE-T Receive

On the receive side, input buffers and level detecting squelch circuits are employed. A differential input receiver

circuit and a phase-locked loop (PLL) perform the decoding function. The Manchester-encoded data stream is separated into clock signal and NRZ data. A squelch circuit rejects signals with levels less than 400mV or with short pulse widths to prevent noise at the RXP-or-RXM input from falsely triggering the decoder. When the input exceeds the squelch limit, the PLL locks onto the incoming signal and the KSZ8842M decodes a data frame. The receiver clock is maintained active during idle periods in between data reception.

Power Management

The KSZ8842M features per port power-down mode. To save power, the user can power-down the port that is not in use by setting bit 11 in either P1CR4 or P1MBCR register for port 1 and setting bit 11 in either P2CR4 or P2MBCR register for port 2. To bring the port back up, reset bit 11 in these registers.

In addition, there is a full switch power-down mode. This mode shuts the entire switch down, when the PWRDN (pin 36) is pulled down to low.

MDI/MDI-X Auto Crossover

To eliminate the need for crossover cables between similar devices, the KSZ8842M supports HP-Auto MDI/MDI-X and IEEE 802.3u standard MDI/MDI-X auto crossover. HP-Auto MDI/MDI-X is the default.

The auto-sense function detects remote transmit and receive pairs and correctly assigns the transmit and receive pairs for the KSZ8842M device. This feature is extremely useful when end users are unaware of cable types in addition to saving on an additional uplink configuration connection. The auto-crossover feature can be disabled through the port control registers.

The IEEE 802.3u standard MDI and MDI-X definitions are:

MDI		**MDI-X**	
RJ45 Pins	**Signals**	**RJ45 Pins**	**Signals**
1	TD+	1	RD+
2	TD-	2	RD-
3	RD+	3	TD+
6	RD-	6	TD-

Table 1. MDI/MDI-X Pin Definitions

Straight Cable

A straight cable connects an MDI device to an MDI-X device or an MDI-X device to an MDI device. The following diagram shows a typical straight cable connection between a network interface card (NIC) (MDI) and a switch, or hub (MDI-X).

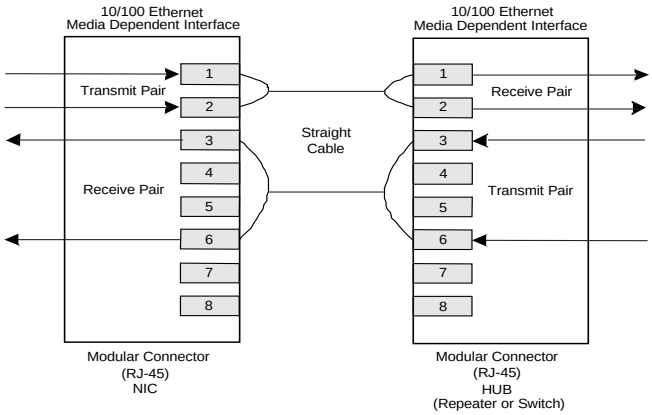

Figure 6. Typical Straight Cable Connection

Crossover Cable

A crossover cable connects an MDI device to another MDI device, or an MDI-X device to another MDI-X device. The following diagram shows a typical crossover cable connection between two switches or hubs (two MDI-X devices).

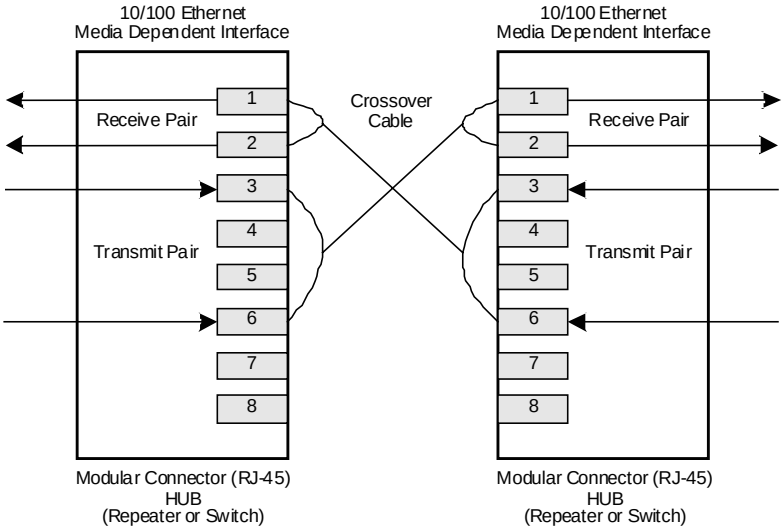

Figure 7. Typical Crossover Cable Connection

Auto Negotiation

The KSZ8842M conforms to the auto negotiation protocol as described by the 802.3 committee to allow the channel to operate at 10Base-T or 100Base-TX.

Auto negotiation allows unshielded twisted pair (UTP) link partners to select the best common mode of operation. In auto negotiation, the link partners advertise capabilities across the link to each other. If auto negotiation is not supported or the link partner to the KSZ8842M is forced to bypass auto negotiation, the mode is set by observing the signal at the receiver. This is known as parallel mode because while the transmitter is sending auto negotiation advertisements, the receiver is listening for advertisements or a fixed signal protocol.

The link setup is shown in the following flow diagram (Figure 8).

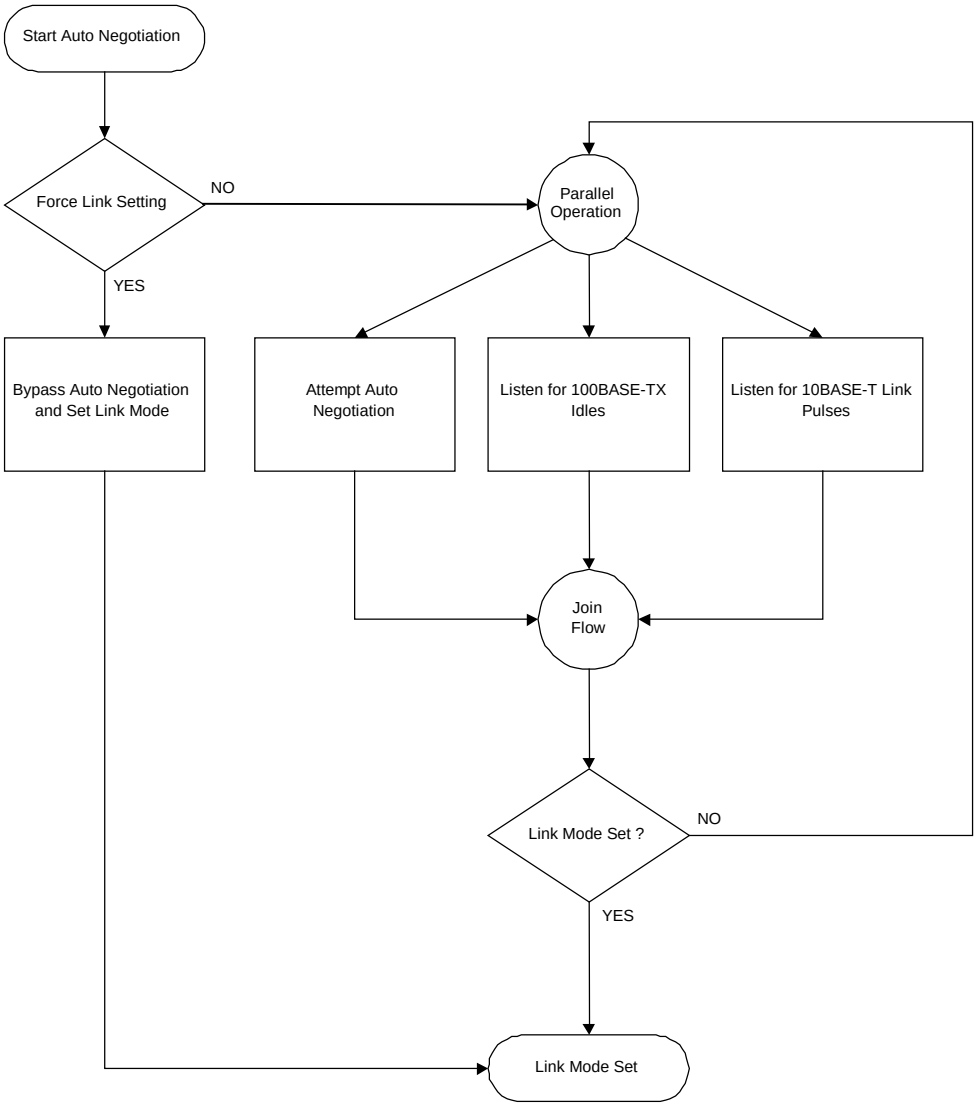

Figure 8. Auto Negotiation and Parallel Operation

LinkMD Cable Diagnostics

The KSZ8842M LinkMD uses time domain reflectometry (TDR) to analyze the cabling plant for common cabling problems such as open circuits, short circuits, and impedance mismatches.

LinkMD works by sending a pulse of known amplitude and duration down the MDI and MDI-X pairs and then analyzes the shape of the reflected signal. Timing the pulse duration gives an indication of the distance to the cabling fault with a maximum distance of 200m and an accuracy of +/–2m. Internal circuitry displays the TDR information in a user-readable digital format in registers P1VCT[8:0] or P2VCT[8:0].

Note: cable diagnostics are only valid for copper connections –fiber-optic operation is not supported.

Access

LinkMD is initiated by accessing register P1VCT/P2VCT, the LinkMD Control/Status register, in conjunction with register P1CR4/P2CR4, the 100BASE-TX PHY Controller register.

Usage

LinkMD can be run at any time by making sure Auto MDIX has been disabled. To disable Auto-MDIX, write a ‘1’ to P1CR4[10] for port 1 or P2CR4[10] for port 2 to enable manual control over the pair used to transmit the LinkMD pulse. The self-clearing cable diagnostic test enable bit, P1VCT[15] for port 1 or P2VCT[15] for port 2 , is set to ‘1’ to start the test on this pair.

When bit P1VCT[15] or P2VCT[15] returns to ‘0’, the test is complete. The test result is returned in bits P1VCT[14:13] or P2VCT[14:13] and the distance is returned in bits P1VCT[8:0] or P2VCT[8:0]. The cable diagnostic test results are as follows:

00 = Valid test, normal condition

01 = Valid test, open circuit in cable

10 = Valid test, short circuit in cable

11 = Invalid test, LinkMD failed

If P1VCT[14:13]=11 or P2VCT[14:13]=11, this indicates an invalid test, and occurs when the KSZ8842M is unable to shut down the link partner. In this instance, the test is not run, as it is not possible for the KSZ8842M to determine if the detected signal is a reflection of the signal generated or a signal from another source.

Cable distance can be approximated by the following formula:

P1VCT[8:0] X 0.4m for port 1 cable distance

P2VCT[8:0] X 0.4m for port 2 cable distance

This constant may be calibrated for different cabling conditions, including cables with a velocity of propagation that varies significantly from the norm.

Functional Overview: MAC and Switch

Address Lookup

The internal lookup table stores MAC addresses and their associated information. It contains a 1K entry unicast address learning table plus switching information.

The KSZ8842M is guaranteed to learn 1K addresses and distinguishes itself from hash-based lookup tables, which depending on the operating environment and probabilities, may not guarantee the absolute number of addresses it can learn.

Learning

The internal lookup engine updates its table with a new entry if the following conditions are met:

1. The received packet's Source Address (SA) does not exist in the lookup table.
2. The received packet is good without receiving errors; the packet size is legal length.

The lookup engine inserts the qualified SA into the table, along with the port number and time stamp. If the table is full, the last entry of the table is deleted to make room for the new entry.

Migration

The internal lookup engine also monitors whether a station has moved. If a station has moved, it updates the table accordingly. Migration happens when the following conditions are met:

1. The received packet's SA is in the table but the associated source port information is different.
2. The received packet is good without receiving errors; the packet size is legal length.

The lookup engine updates the existing record in the table with the new source port information.

Aging

The lookup engine updates the time stamp information of a record whenever the corresponding SA appears. The time stamp is used in the aging process. If a record is not updated for a period of time, the lookup engine removes the record from the table. The lookup engine constantly performs the aging process and continuously removes aging records. The aging period is about 200 seconds. This feature can be enabled or disabled through Global Register SGCR1[10].

Forwarding

The KSZ8842M forwards packets using the algorithm that is depicted in the following flowcharts. Figure 9 shows stage one of the forwarding algorithm where the search engine looks up the VLAN ID, static table, and dynamic table for the destination address, and comes up with “port to forward 1” (PTF1). PTF1 is then further modified by spanning tree, IGMP snooping, port mirroring, and port VLAN processes to come up with “port to forward 2” (PTF2), as shown in Figure 10. The packet is sent to PTF2.

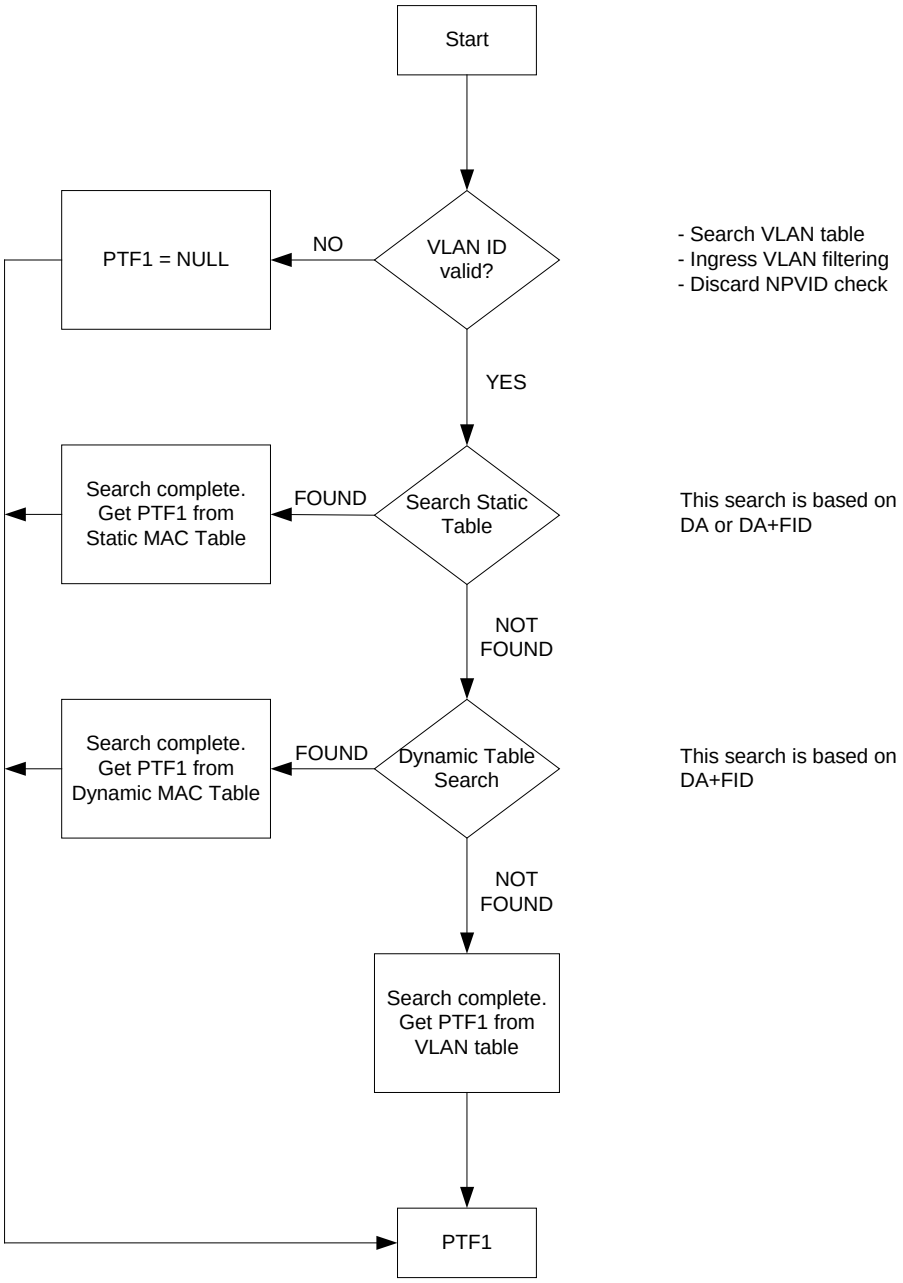

Figure 9. Destination Address Lookup Flow Chart in Stage One

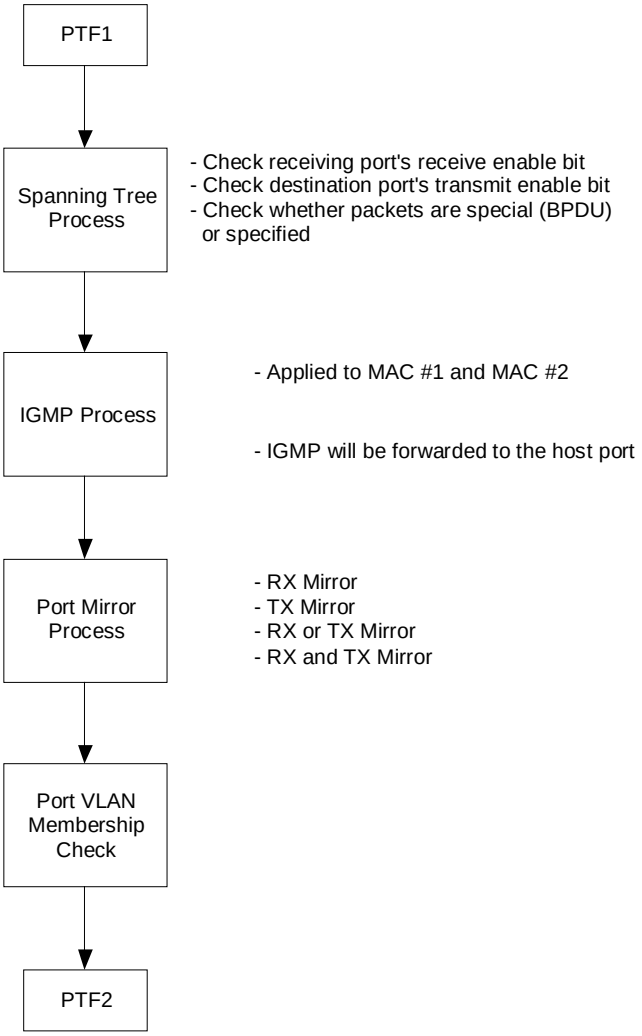

Figure 10. Destination Address Resolution Flow Chart in Stage Two

The KSZ8842M will not forward the following packets:

1. Error packets.
   These include framing errors, Frame Check Sequence (FCS) errors, alignment errors, and illegal size packet errors.
2. 802.3x pause frames.
   The KSZ8842M intercepts these packets and performs the flow control.
3. "Local" packets.
   Based on destination address (DA) lookup. If the destination port from the lookup table matches the port from which the packet originated, the packet is defined as "local."

Switching Engine

The KSZ8842M features a high-performance switching engine to move data to and from the MAC's packet buffers. It operates in store and forward mode, while the efficient switching mechanism reduces overall latency.

The switching engine has a 32KB internal frame buffer. This resource is shared between all the ports. There are a total of 256 buffers available. Each buffer is sized at 128B.

MAC Operation

The KSZ8842M strictly abides by IEEE 802.3 standards to maximize compatibility. Additionally, there is an added MAC filtering function to filter Unicast packets. The MAC filtering function is useful in applications such as VoIP where restricting certain packets reduces congestion and thus improves performance.

Inter Packet Gap (IPG)

If a frame is successfully transmitted, the minimum 96-bit time for IPG is measured between two consecutive packets. If the current packet is experiencing collisions, the minimum 96-bit time for IPG is measured from carrier sense (CRS) to the next transmit packet.

Back-Off Algorithm

The KSZ8842M implements the IEEE standard 802.3 binary exponential back-off algorithm in half-duplex mode, and optional "aggressive mode" back-off. After 16 collisions, the packet is optionally dropped depending on the switch configuration in SGCR1[8].

Late Collision

If a transmit packet experiences collisions after 512 bit times of the transmission, the packet is dropped.

legal Packet Size

The KSZ8842M discards packets less than 64 bytes and can be programmed to accept packet size up to 1536 bytes in SGCR2[1]. The KSZ8842M can also be programmed for special applications to accept packet size up to 1916 bytes in SGCR2[2].

Flow Control

The KSZ8842M supports standard 802.3x flow control frames on both transmit and receive sides.

On the receive side, if the KSZ8842M receives a pause control frame, the KSZ8842M will not transmit the next normal frame until the timer, specified in the pause control frame, expires. If another pause frame is received before the current timer expires, the timer will be updated with the new value in the second pause frame. During this period (while it is flow controlled), only flow control packets from the KSZ8842M are transmitted.

On the transmit side, the KSZ8842M has intelligent and efficient ways to determine when to invoke flow control. The flow control is based on availability of the system resources, including available buffers, available transmit queues, and available receive queues.

The KSZ8842M will flow control a port that has just received a packet if the destination port resource is busy. The KSZ8842M issues a flow control frame (Xoff), containing the maximum pause time defined in IEEE standard 802.3x. Once the resource is freed up, the KSZ8842M sends out the other flow control frame (Xon) with zero pause time to turn off the flow control (turn on transmission to the port). A hysteresis feature is provided to prevent the flow control mechanism from being constantly activated and deactivated.

The KSZ8842M flow controls all ports if the receive queue becomes full.

Half-Duplex Backpressure

A half-duplex backpressure option (not in IEEE 802.3 standards) is also provided. The activation and deactivation conditions are the same in full-duplex mode. If backpressure is required, the KSZ8842M sends preambles to defer the other stations' transmission (carrier sense deference).

To avoid jabber and excessive deference (as defined in the 802.3 standard), after a certain time, the KSZ8842M discontinues the carrier sense and then raises it again quickly. This short silent time (no carrier sense) prevents other stations from sending out packets thus keeping other stations in a carrier sense deferred state. If the port has packets to send during a backpressure situation, the carrier sense type backpressure is interrupted and those packets are transmitted instead. If there are no additional packets to send, carrier sense type backpressure is reactivated again until switch resources free up. If a collision occurs, the binary exponential back-off algorithm is skipped and carrier sense is generated immediately, thus reducing the chance of further collisions and carrier sense is maintained to prevent packet reception.

To ensure no packet loss in 10 BASE-T or 100 BASE-TX half-duplex modes, the user must enable the following:

1. Aggressive back off (bit 8 in SGCR1)
2. No excessive collision drop (bit 3 in SGCR2)

Note: These bits are not set in default, since this is not the IEEE standard.

Broadcast Storm Protection

The KSZ8842M has an intelligent option to protect the switch system from receiving too many broadcast packets. As the broadcast packets are forwarded to all ports except the source port, an excessive number of switch resources (bandwidth and available space in transmit queues) may be utilized. The KSZ8842M has the option to include “multicast packets” for storm control. The broadcast storm rate parameters are programmed globally, and can be enabled or disabled on a per port basis in P1CR1[7] and P2CR1[7]. The rate is based on a 67ms interval for 100BT and a 670ms interval for 10BT. At the beginning of each interval, the counter is cleared to zero and the rate limit mechanism starts to count the number of bytes during the interval. The rate definition is described in SGCR3[15:8]. The default setting is 0x63 (99 decimal). This is equal to a rate of 1%, calculated as follows:

148,800 frames/sec X 67 ms/interval X 1% = 99 frames/interval (approx.) = 0x63

Note: 148,800 frames/sec is based on 64-byte block of packets in 100BASE-T with 12 bytes of IPG and 8 bytes of preamble between two packets.

Repeater Mode

When the KSZ8842M is set to repeater mode (SGCR3[7] = 1), it only works on 100BT half-duplex mode. In repeater enabled mode, all ingress packets will be broadcast to the other two ports without MAC address checking and learning. Before setting to the repeater mode, the user has to set bit 13 (100Mbps), bit 12 (auto-negotiation disabled) and bit 8 (half duplex) in both P1MBCR and P2MBCR registers as well as set bit 6 (host half duplex) in SGCR3 register for the repeater mode.

The latency in repeater mode is defined from the 1st bit of DA into the ingress port 1 to the 1st bit of DA out of the egress port 2. The minimum is 270 ns and the maximum is 310 ns (one clock skew of 25 MHz between TX and RX).

Clock Generator

The X1 and X2 pins are connected to a 25 MHz crystal. X1 can also serve as the connector to a 3.3V, 25 MHz oscillator (as described in the pin description).

The bus interface unit (BIU) uses BCLK (Bus Clock) for synchronous accesses. The maximum host port frequency is 50 MHz for VLBus-like and burst mode (32-bit interface only).

Bus Interface Unit (BIU)

The host interface of the BIU is designed to communicate with embedded processors. The host interface of the KSZ8842M is a generic bus interface. Some glue logic may be required when the interface talks to various buses and processors.

In terms of transfer type, the BIU can support two transfers: asynchronous transfer and synchronous transfer. To support these transfers (asynchronous and synchronous), the BIU provides three groups of signals:

1. Synchronous signals
2. Asynchronous signals
3. Common signals are used for both synchronous and asynchronous transfers.

Since both synchronous and asynchronous signals are independent of each other, synchronous burst transfer and asynchronous transfer can be mixed or interleaved but cannot be overlapped (due to the sharing of the common signals).

In terms of physical data bus size, the KSZ8842M supports 8, 16, and 32 bit host/industrial standard data bus sizes.

Given a physical data bus size, the KSZ8842M supports 8, 16, or 32-bit data transfers depending on the size of the physical data bus. For example, for a 32-bit system/host data bus, it allows 8, 16, and 32-bit data transfers (KSZ8842-32MQL); for a 16-bit system/host data bus, it allows 8 and 16-bit data transfers (KSZ8842-16MQL); and for 8-bit system/host data bus, it only allows 8-bit data transfers (KSZ8842-16MQL).
Note that KSZ8842M does not support internal data byte-swap but it does support internal data word-swap. This means that the system/host data bus HD[7:0] has to connect to both D[7:0] and D[15:8] for 8-bit data bus interfaces. However, the system/host data bus HD[15:8] and HD[7:0] just connects to D[15:8] and D[7:0], respectively, for 16-bit data bus interface; there is no need to connect HD[31:24] and HD[23:16] to D[31:24] and D[23:16].
Table 2 describes the BIU signal grouping.

<table>
<tr><th>Signal</th><th>Type[1]</th><th>Function</th></tr>
<tr><td colspan="3">Common Signals</td></tr>
<tr><td>A[15:1]</td><td>I</td><td>Address</td></tr>
<tr><td>AEN</td><td>I</td><td>Address Enable
Address Enable asserted indicates memory address on the bus for DMA access and since the device is an I/O device, address decoding is only enabled when AEN is low.</td></tr>
<tr><td>BE3N, BE2N, BE1N, BE0N</td><td>I</td><td>Byte Enable
<table>
<tr><th>BE0N</th><th>BE1N</th><th>BE2N</th><th>BE3N</th><th>Description</th></tr>
<tr><td>0</td><td>0</td><td>0</td><td>0</td><td>32-bit access (32-bit bus only)</td></tr>
<tr><td>0</td><td>0</td><td>1</td><td>1</td><td>Lower 16-bit (D[15:0]) access</td></tr>
<tr><td>1</td><td>1</td><td>0</td><td>0</td><td>Higher 16-bit (D[31:16]) access (32-bit bus only)</td></tr>
<tr><td>0</td><td>1</td><td>1</td><td>1</td><td>Byte 0 (D[7:0]) access</td></tr>
<tr><td>1</td><td>0</td><td>1</td><td>1</td><td>Byte 1 (D[15:8]) access</td></tr>
<tr><td>1</td><td>1</td><td>0</td><td>1</td><td>Byte 2 (D[23:16]) access (32-bit bus only)</td></tr>
<tr><td>1</td><td>1</td><td>1</td><td>0</td><td>Byte 3 (D[31:24]) access (32-bit bus only)</td></tr>
</table>
Note 1: BE3N, BE2N, BE1N and BE0N are ignored when DATACSN is low because 32 bit transfers are assumed.
Note 2: BE2N and BE3N are valid only for the KSZ8842-32 mode, and are NC for the KSZ8842-16 mode.</td></tr>
<tr><td>D[31:16]</td><td>I/O</td><td>Data
For KSZ8842-32 Mode only</td></tr>
<tr><td>D[15:0]</td><td>I/O</td><td>Data
For both KSZ8842-32 and KSZ8842-16 Modes</td></tr>
<tr><td>ADSN</td><td>I</td><td>Address Strobe
The rising edge of ADSN is used to latch A[15:1], AEN, BE3N, BE2N, BE1N and BE0N.</td></tr>
<tr><td>LDEVN</td><td>O</td><td>Local Device
This signal is a combinatorial decode of AEN and A[15:4], The A[15:4] is used to compare against the Base Address Register.</td></tr>
<tr><td>DATACSN</td><td>I</td><td>Data Register Chip Select (For KSZ8842-32 Mode only)
This signal is used for central decoding architecture (mostly for embedded application). When asserted, the device's local decoding logic is ignored and the 32-bit access to QMU Data Register is assumed.</td></tr>
<tr><td>INTRN</td><td>O</td><td>Interrupt</td></tr>
<tr><td colspan="3">Synchronous Transfer Signals</td></tr>
<tr><td>VLBUSN</td><td>I</td><td>VLBUSN = 0, VLBus-like cycle.</td></tr>
</table>

		VLBUSN = 1, burst cycle (both host/system and KSZ8842 can insert wait state)
CYCLEN	I	For VLBus-like access: used to sample SWR when asserted. For burst access: used to connect to IOWC# bus signal to indicate burst write.
SWR	I	**Write/Read** For VLBus-like access: used to indicate write (High) or read (Low) transfer. For burst access: used to connect to IORC# bus signal to indicate burst read.
SRDYN	O	**Synchronous Ready** For VLBus-like access: exactly the same signal definition of nSRDY in VLBus. For burst access: insert wait state by the KSZ8842M whenever necessary during the Data Register access.
RDYRTNN	I	**Ready Return** For VLBus-like access: exactly like RDYRTNN signal in VLBus to end the cycle. For burst access: exactly like EXRDY signal in EISA to insert wait states. Note that the wait states are inserted by system logic (memory) not by KSZ8842M.
BCLK	I	**Bus Clock**
Asynchronous Transfer Signals		
RDN	I	**Asynchronous Read**
WRN	I	**Asynchronous Write**
ARDY	O	**Asynchronous Ready** This signal is asserted (low) to insert wait states.

Note 1: I = Input. O = Output. I/O = Bi-directional.

Table 2. Bus Interface Unit Signal Grouping

Regardless of whether the transfer is synchronous or asynchronous, if the address latch is required, use the rising edge of ADSN to latch the incoming signals A [15:1], AEN, BE3N, BE2N, BE1N, and BE0N.

Note: Whether the transfer is synchronous or asynchronous, if the local device decoder is used, LDEVN will be asserted to indicate that the KSZ8842M is successfully targeted. Basically, signal LDEVN is a combinatorial decode of AEN and A[15:4].

Asynchronous Interface

For asynchronous transfers, the asynchronous dedicated signals RDN (for read) or WRN (for write) toggle, but the synchronous dedicated signals BCLK, CYCLEN, SWR, and RDYRTNN are de-asserted and stay at the same logic level throughout the entire asynchronous transfer.

There is no data burst support for asynchronous transfer. All asynchronous transfers are single-data transfers. The BIU, however, provides flexible asynchronous interfacing to communicate with various applications and architectures. Three major ways of interfacing with the system (host) are.

1. Interfacing with the system/host relying on local device decoding and having stable address throughout the whole transfer:

   The typical example for this application is ISA-like bus interface using latched address signals as shown in the Figure 16. No additional address latch is required, therefore ADSN should be connected Low. The BIU decodes A[15:4] and qualifies with AEN (Address Enable) to determine if the KSZ8842M switch is the intended target. The host utilizes the rising edge of RDN to latch read data and the BIU will use rising edge of WRN to latch write data.
2. Interfacing with the system/host relying on local device decoding but not having stable address throughout the entire transfer: the typical example for this application is EISA-like bus (non-burst) interface as shown in the Figure 17. This type of interface requires ADSN to latch the address on the rising edge. The BIU decodes latched A[15:4] and qualifies with AEN to determine if the KSZ8842M switch is the intended target. The data transfer is the same as the first case.
3. Interfacing with the system/host relying on central decoding (KSZ8842-32 mode only).

The typical example for this application is for an embedded processor having a central decoder on the system board or within the processor. Connecting the chip select (CS) from system/host to DATACSN bypasses the local device decoder. When the DATACSN is asserted, it only allows access to the Data Register in 32 bits and BE3N, BE2N, BE1N, and BE0N are ignored as shown in the Figure 18. No other registers can be accessed by asserting DATACSN. The data transfer is the same as in the first case. Independent of the type of asynchronous interface used. To insert a wait state, the BIU will assert ARDY to prolong the cycle.

Synchronous Interface

For synchronous transfers, the synchronous dedicated signals CYCLEN, SWR, and RDYRTNN will toggle but the asynchronous dedicated signals RDN and WRN are de-asserted and stay at the same logic level throughout the entire synchronous transfer.

The synchronous interface mainly supports two applications, one for VLBus-like and the other for EISA-like (DMA type C) burst transfers. The VLBus-like interface supports only single-data transfer. The pin option VLBUSN determines if it is a VLBus-like or EISA-like burst transfer – if VLBUSN = 0, the interface is for VLBus-like transfer; if VLBUSN = 1, the interface is for EISA-like burst transfer.

For VLBus-like transfer interface (VLBUSN = 0):

This interface is used in an architecture in which the device's local decoder is utilized; that is, the BIU decodes latched A[15:4] and qualifies with AEN (Address Enable) to determine if the switch is the intended target. No burst is supported in this application. The M/nIO signal connection in VLBus is routed to AEN. The CYCLEN in this application is used to sample the SWR signal when it is asserted. Usually, CYCLEN is one clock delay of ADSN. There is a handshaking process to end the cycle of VLBus-like transfers. When the KSZ8842M is ready to finish the cycle, it asserts SRDYN. The system/host acknowledges SRDYN by asserting RDYRTNN after the system/host has latched the read data. The KSZ8842M holds the read data until RDYRTNN is asserted. The timing waveform is shown in Figure 22 and Figure 23.

For EISA-like burst transfer interface (VLBUSN = 1):

The SWR is connected to IORC# in EISA to indicate the burst read and CYCLEN is connected to IOWC# in EISA to indicate the burst write. Note that in this application, both the system/host/memory and KSZ8842M are capable of inserting wait states. For system/host/memory to insert a wait state, assert the RDYRTNN signal; for the KSZ8842M to insert the wait state, assert the SRDYN signal. The timing waveform is shown in Figure 20 and Figure 21.

Summary

Figure 11 shows the mapping from ISA-like, EISA-like and VLBus-like transactions to the switch's BIU.

Figure 12 shows the connection for different data bus sizes.

Note: For the 8-bit data bus mode, the internal inverter is enabled and connected between BE0N and BE1N, so even address will enable the BE0N and odd address will enable the BE1N.

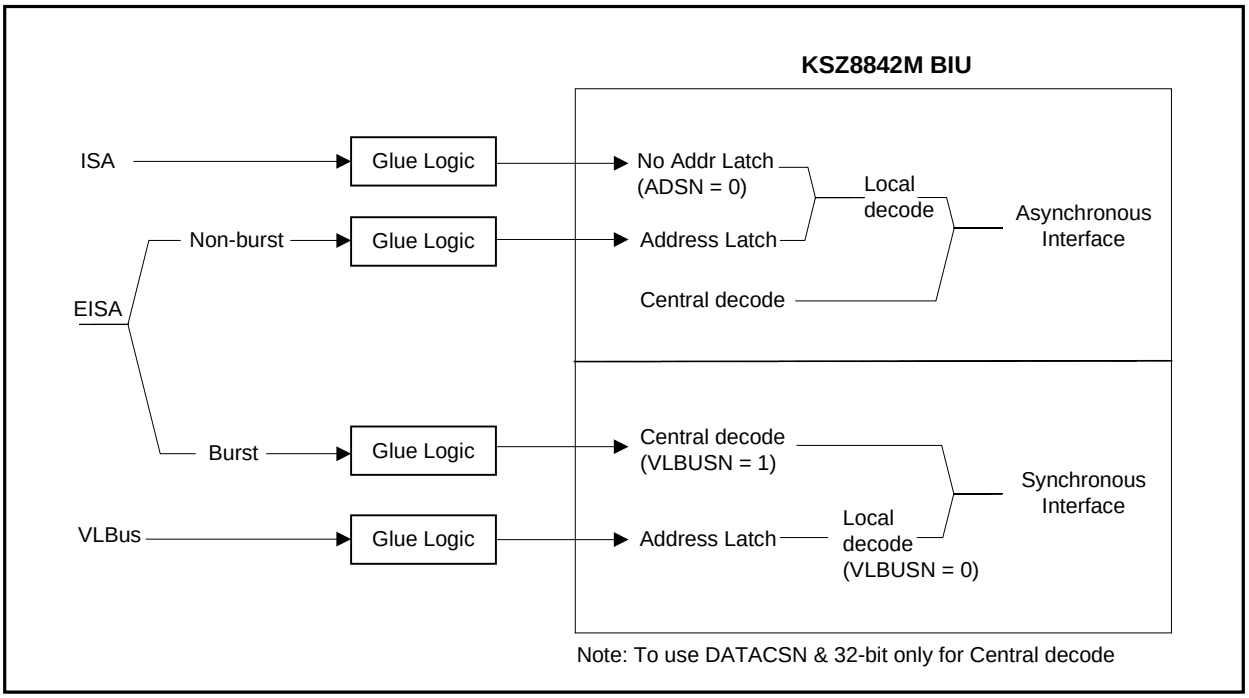

Figure 11. Mapping from ISA-like, EISA-like, and VLBus-like transactions to the KSZ8842M Bus

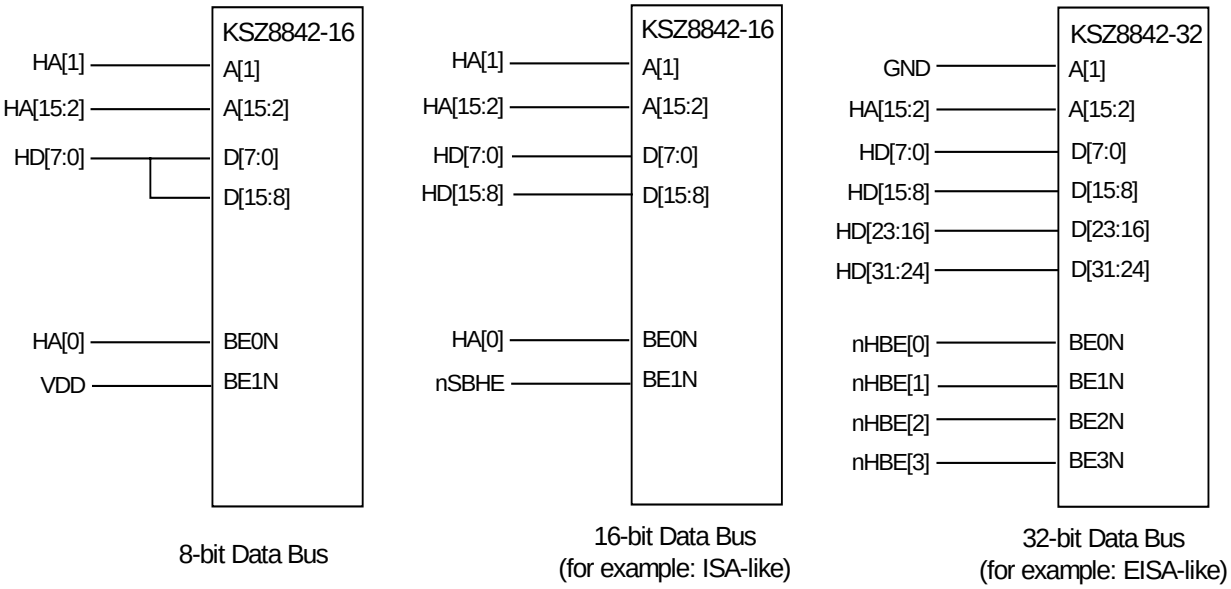

Figure 12. KSZ8842M 8-Bit, 16-Bit, and 32-Bit Data Bus Connections

BIU Implementation Principles

Since the KSZ8842M is an I/O device with 16 addressable locations, address decoding is based on the values of A15-A4 and AEN. Whenever DATACSN is asserted, the address decoder is disabled and a 32-bit transfer to Data Register is assumed (BE3N – BE0N are ignored).

If address latching is required, the address is latched on the rising edge of ADSN and is transparent when ADSN=0.

1. Byte, word, and double-word data buses and accesses (transfers) are supported.

2. Internal byte swapping is not implemented and word swapping is supported internally. Refer to Figure 12 for the appropriate 8-bit, 16-bit, and 32-bit data bus connection.
3. Since independent sets of synchronous and asynchronous signals are provided, synchronous and asynchronous cycles can be mixed or interleaved as long as they are not active simultaneously.
4. The asynchronous interface uses RDN and WRN signal strobes for data latching. If necessary, ARDY is de-asserted on the leading edge of the strobe.
5. The VLBUS-like synchronous interface uses BCLK, ADSN, and SWR and CYCLEN to control read and write operations and generate SRDYN to insert the wait state, if necessary, when VLBUSN = 0. For read, the data must be held until RDYRTNN is asserted.
6. The EISA-like burst transfer is supported using synchronous interface signals and DATACSN when I/O signal VLBUSN = 1. Both the system/host/memory and KSZ8842M are capable of inserting wait states. To set the system/host/memory to insert a wait state, assert RDYRTNN signal. To set the KSZ8842M to insert a wait state, assert SRDYN signal.

Queue Management Unit (QMU)

The Queue Management Unit (QMU) manages packet traffic between the MAC/PHY interface and the system host. It has built-in packet memory for receive and transmit functions called TXQ (Transmit Queue) and RXQ (Receive Queue). Each queue contains 4KB of memory for back-to-back, non-blocking frame transfer performance. It provides a group of control registers for system control, frame status registers for current packet transmit/receive status, and interrupts to inform the host of the real time TX/RX status.

Transmit Queue (TXQ) Frame Format

The frame format for the transmit queue is shown in the following Table 3. The first word contains the control information for the frame to transmit. The second word is used to specify the total number of bytes of the frame. The packet data follows. The packet data area holds the frame itself. It may or may not include the CRC checksum depending on whether hardware CRC checksum generation is enabled.

Multiple frames can be pipelined in both the transmit queue and receive queue as long as there is enough queue memory, thus avoiding overrun. For each transmitted frame, the transmit status information for the frame is located in the TXSR register.

Packet Memory Address Offset	**Bit 15** **2nd Byte**	**Bit 0** **1st Byte**
0	Control Word	
2	Byte Count	
4 - up	Packet Data (maximum size is 1916)	

Table 3: Transmit Queue Frame Format

Since multiple packets can be pipelined into the TX packet memory for transmit, the transmit status reflects the status of the packet that is currently being transferred on the MAC interface (which may or may not be the last queued packet in the TX queue).

The transmit control word is the first 16-bit word in the TX packet memory, followed by a 16-bit byte count. It must be word aligned. Each control word corresponds to one TX packet. Table 4 gives the transmit control word bit fields.

Bit	Description
15	**TXIC Transmit Interrupt on Completion** When bit is set, the KSZ8842M sets the transmit interrupt after the present frame has been transmitted.
14-10	Reserved
9-8	**TXDPN Transmit Destination Port Number** When bit is set, this field indicates the destination port(s) where the packet is forwarded from host system. Set bit 8 to indicate that port 1 is the destination port. Set bit 9 to indicate that port 2 is the destination port. Setting all ports to 1 causes the switch engine to broadcast the packet to both ports. Setting all bits to 0 has no effect. The internal switch engine forwards the packets according to the switching algorithm in its MAC lookup table.
7-6	Reserved
5-0	**TXFID Transmit Frame ID** This field specifies the frame ID that is used to identify the frame and its associated status information in the transmit status register TXSR[5:0].

Table 4. Transmit Control Word Bit Fields

The transmit Byte Count specifies the total number of bytes to be transmitted from the TXQ. Its format is given in Table 5.

Bit	Description
15-11	Reserved
10-0	**TXBC Transmit Byte Count** Transmit Byte Count. Hardware uses the byte count information to conserve the TX buffer memory for better utilization of the packet memory. Note: The hardware behavior is unknown if an incorrect byte count information is written to this field. Writing a 0 value to this field is not permitted.

Table 5. Transmit Byte Count Format

The data area contains six bytes of Destination Address (DA) followed by six bytes of Source Address (SA), followed by a variable-length number of bytes. On transmit, all bytes are provided by the CPU, including the source address. The KSZ8842M does not insert its own source address. The 802.3 Frame Length word (Frame Type in Ethernet) is not interpreted by the KSZ8842M. It is treated transparently as data for transmit operations.

Receive Queue (RXQ) Frame Format

The frame format for the receive queue is shown in Table 6. The first word contains the status information for the frame received. The second word is the total number of bytes of the RX frame. Following that is the packet data area. The packet data area holds the frame itself. It may or may not include the CRC checksum depending on whether hardware CRC stripping is enabled.

Packet Memory Address Offset	Bit 15 Bit 0 2nd Byte 1st Byte
0	Status Word
2	Byte Count
4 - up	Packet Data (maximum size is 1916)

Table 6: Receive Queue Frame Format

For receive, the packet receive status always reflects the receive status of the packet received in the current RX packet memory (see Table 7). The RXSR register indicates the status of the current received frame.

Bit	Description
15	**RXFV Receive Frame Valid** When bit is set, indicates that the present frame in the receive packet memory is valid and received from MAC/PHY. The status information currently in this location is also valid. When bit is reset, indicates that there is either no pending receive frame or current frame is still in the process of receiving and has not completed yet.
14-10	Reserved
9-8	**RXSPN Receive Source Port Number** When bit is set, this field indicates the source port where the packet was received. (Setting bit 9 = 0 and bit 8 = 1 indicates the packet was received from port 1. Setting bit 9 = 1 and bit 8 = 0 indicates that the packet was received from port 2. Valid port is either port 1 or port 2.
7	**RXBF Receive Broadcast Frame** When bit is set, indicates that this frame has a broadcast address.
6	**RXMF Receive Multicast Frame** When bit is set, it indicates that this frame has a multicast address (including the broadcast address).
5	**RXUF Receive Unicast Frame** When bit is set, indicates that this frame has a unicast address.
4	Reserved
3	**RXFT Receive Frame Type** When bit is set, indicates that the frame is an Ethernet-type frame (frame length is greater than 1500 bytes). When clear, indicate that the frame is an IEEE 802.3 frame. This bit is not valid for runt frames.
2	**RXTL Receive Frame Too Long** When bit is set, indicates that the frame length exceeds the maximum size of 1518 bytes. Frames too long are passed to the host only if the pass bad frame bit is set. Note: Frame too long is only a frame length indication and does not cause any frame truncation.
1	**RXRF Receive Runt Frame** When bit is set, indicates that a frame was damaged by a collision or premature termination before the collision window has passed. Runt frames are passed to the host only if the pass bad frame bit is set.
0	**RXCE Receive CRC Error** When bit is set, indicates that a CRC error has occurred on the current received frame. CRC error frame are passed to the host only if the pass bad frame bit is set.

Table 7. FRXQ Packet Receive Status

Table 8 gives the format of the RX byte count field.

Bit	Description
15-11	Reserved
10-0	**RXBC Receive Byte Count** Receive Byte Count.

Table 8. FRXQ RX Byte Count Field

Advanced Switch Functions

Spanning Tree Support

To support spanning tree, the host port is the designated port for the processor.

The other ports can be configured in one of the five spanning tree states via “transmit enable”, “receive enable” and “learning disable” register settings in registers P1CR2 and P2CR2 for ports 1 and 2, respectively. Table 9 shows the port setting and software actions taken for each of the five spanning tree states.

Disable State	**Port Setting**	**Software Action**
The port should not forward or receive any packets. Learning is disabled.	“transmit enable = 0, receive enable = 0, learning disable =1”	The processor should not send any packets to the port. The switch may still send specific packets to the processor (packets that match some entries in the “static MAC table” with “overriding bit” set) and the processor should discard those packets. Address learning is disabled on the port in this state.
Blocking State	**Port Setting**	**Software Action**
Only packets to the processor are forwarded.	“transmit enable = 0, receive enable = 0, learning disable =1”	The processor should not send any packets to the port(s) in this state. The processor should program the “Static MAC table” with the entries that it needs to receive (for example, BPDU packets). The “overriding” bit should also be set so that the switch will forward those specific packets to the processor. Address learning is disabled on the port in this state.
Listening State	**Port Setting**	**Software Action**
Only packets to and from the processor are forwarded. Learning is disabled.	“transmit enable = 0, receive enable = 0, learning disable =1”	The processor should program the “Static MAC table” with the entries that it needs to receive (for example, BPDU packets). The “overriding” bit should be set so that the switch will forward those specific packets to the processor. The processor may send packets to the port(s) in this state. Address learning is disabled on the port in this state.
Learning State	**Port Setting**	**Software Action**
Only packets to and from the processor are forwarded. Learning is enabled.	“transmit enable = 0, receive enable = 0, learning disable = 0”	The processor should program the “Static MAC table” with the entries that it needs to receive (for example, BPDU packets). The “overriding” bit should be set so that the switch will forward those specific packets to the processor. The processor may send packets to the port(s) in this state. Address learning is enabled on the port in this state.
Forwarding State	**Port Setting**	**Software Action**
Packets are forwarded and received normally. Learning is enabled.	“transmit enable = 1, receive enable = 1, learning disable = 0”	The processor programs the “Static MAC table” with the entries that it needs to receive (for example, BPDU packets). The “overriding” bit is set so that the switch forwards those specific packets to the processor. The processor can send packets to the port(s) in this state. Address learning is enabled on the port in this state.

Table 9: Spanning Tree States

IGMP Support

For Internet Group Management Protocol (IGMP) support in Layer 2, the KSZ8842M provides two components:

"IGMP" Snooping

The KSZ8842M traps IGMP packets and forwards them only to the processor (host port). The IGMP packets are identified as IP packets (either Ethernet IP packets, or IEEE 802.3 SNAP IP packets) with IP version = 0x4 and protocol version number = 0x2.

"Multicast Address Insertion" in the Static MAC Table

Once the multicast address is programmed in the Static MAC Table, the multicast session is trimmed to the subscribed ports, instead of broadcasting to all ports.

IPv6 MLD Snooping

The KSZ8842M traps IPv6 Multicast Listener Discovery (MLD) packets and forwards them only to the processor (host port). MLD snooping is controlled by SGCR2[13] (MLD snooping enable) and SGCR2[12] (MLD option).

Setting SGCR2[13] causes the KSZ8842M to trap packets that meet all of the following conditions:

- IPv6 multicast packets
- Hop count limit = 1
- IPv6 next header = 1 or 58 (or = 0 with hop-by-hop next header = 1 or 58)
- If SGCR2[12] = 1, IPv6 next header = 43, 44, 50, 51, or 60 (or =0 with hop-by-hop next header = 43, 44, 50, 51, or 60)

Port Mirroring Support

KSZ8842M supports "Port Mirroring" comprehensively as:

"receive only" mirror on a port

All the packets received on the port are mirrored on the sniffer port. For example, port 1 is programmed to be "receive sniff" and the host port is programmed to be the "sniffer port". A packet received on port 1 is destined to port 2 after the internal lookup. The KSZ8842M forwards the packet to both port 2 and the host port. The KSZ8842M can optionally even forward "bad" received packets to the "sniffer port".

"transmit only" mirror on a port

All the packets transmitted on the port are mirrored on the sniffer port. For example, port 1 is programmed to be "transmit sniff" and the host port is programmed to be the "sniffer port". A packet received on port 2 is destined to port 1 after the internal lookup. The KSZ8842M forwards the packet to both port 1 and the host port.

"receive and transmit" mirror on two ports

All the packets received on port A and transmitted on port B are mirrored on the sniffer port. To turn on the "AND" feature, set register SGCR2, bit 8 to "1". For example, port 1 is programmed to be "receive sniff", port 2 is programmed to be "transmit sniff", and the host port is programmed to be the "sniffer port". A packet received on port 1 is destined to port 2 after the internal lookup. The KSZ8842M forwards the packet to both port 2 and the host port.

Multiple ports can be selected as "receive sniff" or "transmit sniff". In addition, any port can be selected as the "sniffer port". All these per port features can be selected through registers P1CR2, P2CR2, and P3CR2 for ports 1, 2, and the host port, respectively.

IEEE 802.1Q VLAN Support

The KSZ8842M supports 16 active VLANs out of the 4096 possible VLANs specified in the IEEE 802.1Q specification. KSZ8842M provides a 16-entry VLAN table, which converts the 12-bits VLAN ID (VID) to the 4-bits Filter ID (FID) for address lookup. If a non-tagged or null-VID-tagged packet is received, the ingress port default VID is used for lookup. In VLAN mode, the lookup process starts with VLAN table lookup to determine whether the VID is valid. If the VID is not valid, the packet is dropped and its address is not learned. If the VID is valid, the FID is retrieved for further lookup. The FID + Destination Address (FID+DA) are used to determine the destination port. The FID + Source Address (FID+SA) are used for address learning. (See Tables 10 and 11.)

DA found in Static MAC Table?	Use FID flag?	FID match?	DA+FID found in Dynamic MAC Table?	Action
No	Don’t care	Don’t care	No	Broadcast to the membership ports defined in the VLAN Table bits [18:16]
No	Don’t care	Don’t care	Yes	Send to the destination port defined in the Dynamic MAC Address Table bits [53:52]
Yes	0	Don’t care	Don’t care	Send to the destination port(s) defined in the Static MAC Address Table bits [50:48]
Yes	1	No	No	Broadcast to the membership ports defined in the VLAN Table bits [18:16]
Yes	1	No	Yes	Send to the destination port defined in the Dynamic MAC Address Table bits [53:52]
Yes	1	Yes	Don’t care	Send to the destination port(s) defined in the Static MAC Address Table bits [50:48]

Table 10. FID+DA Lookup in VLAN Mode

FID+SA found in Dynamic MAC Table?	Action
No	Learn and add FID+SA to the Dynamic MAC Address Table
Yes	Update time stamp

Table 11. FID+SA Lookup in VLAN Mode

QoS Priority Support

The KSZ8842M provides Quality of Service (QoS) for applications such as VoIP and video conferencing. Offering four priority queues per port, the per-port transmit queue can be split into four priority queues: Queue 3 is the highest priority queue and Queue 0 is the lowest priority queue. Bit 0 of registers P1CR1, P2CR1, and P3CR1 is used to enable split transmit queues for ports 1, 2, and the host port, respectively.

Port-Based Priority

With port-based priority, each ingress port is individually classified as a high-priority receiving port. All packets received at the high-priority receiving port are marked as high priority and are sent to the high-priority transmit queue if the corresponding transmit queue is split. Bit 4 and 3 of registers P1CR1, P2CR1, and P3CR1 is used to enable port-based priority for ports 1, 2, and the host port, respectively.

802.1p-Based Priority

For 802.1p-based priority, the KSZ8842M examines the ingress (incoming) packets to determine whether they are tagged. If tagged, the 3-bit priority field in the VLAN tag is retrieved and compared against the “priority mapping” value, as specified by the register SGCR6. The “priority mapping” value is programmable.

Figure 13 illustrates how the 802.1p priority field is embedded in the 802.1Q VLAN tag.

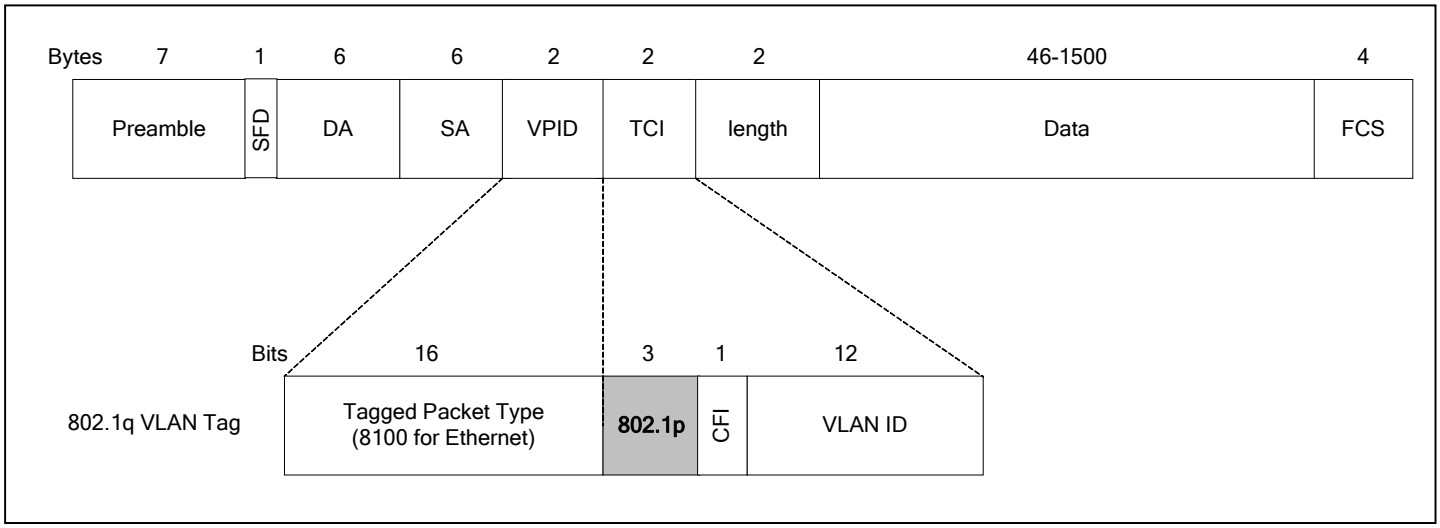

Figure 13. 802.1p Priority Field Format

802.1p based priority is enabled by bit 5 of registers P1CR1, P2CR1, and P3CR1 for ports 1, 2, and the host port, respectively.

The KSZ8842M provides the option to insert or remove the priority tagged frame's header at each individual egress port. This header, consisting of the 2 bytes VLAN protocol ID (VPID) and the 2 bytes tag control information field (TCI), is also referred to as the 802.1Q VLAN tag.

Tag insertion is enabled by bit 2 of registers P1CR1, P2CR1, and P3CR1 for ports 1, 2, and the host port, respectively. At the egress port, untagged packets are tagged with the ingress port's default tag. The default tags are programmed in register sets P1VIDCR, P2VIDCR, and P3VIDCR for ports 1, 2 and the host port, respectively. The KSZ8842M does not add tags to already tagged packets.

Tag removal is enabled by bit 1 of registers P1CR1, P2CR1, and P3CR1 for ports 1, 2, and the host port, respectively. At the egress port, tagged packets will have their 802.1Q VLAN Tags removed. The KSZ8842M will not modify untagged packets.

The CRC is recalculated for both tag insertion and tag removal.

802.1p priority field re-mapping is a QoS feature that allows the KSZ8842M to set the "User Priority Ceiling" at any ingress port. If the ingress packet's priority field has a higher priority value than the default tag's priority field of the ingress port, the packet's priority field is replaced with the default tag's priority field. The "User Priority Ceiling" is enabled by bit 3 of registers P1CR2, P2CR2, and P3CR2 for ports 1, 2, and the host port, respectively.

DiffServ based Priority

DiffServ-based priority uses the ToS registers shown in the Priority Control Registers section. The ToS priority control registers implement a fully decoded, 128-bit Differentiated Services Code Point (DSCP) register to determine packet priority from the 6-bit ToS field in the IP header. When the most significant 6 bits of the ToS field are fully decoded, the resultant of the 64 possibilities is compared with the corresponding bits in the DSCP register to determine priority.

Rate Limiting Support

The KSZ8842M supports hardware rate limiting from 64 Kbps to 88 Mbps, independently on the "receive side" and on the "transmit side" on a per port basis. For 10-base T, a rate setting above 10 Mbps means the rate is not limited. On the receive side, the data receive rate for each priority at each port can be limited by setting up Ingress Rate Control Registers. On the transmit side, the data transmit rate for each priority queue at each port can be limited by setting up Egress Rate Control Registers. The size of each frame has options to include minimum IFG (Inter Frame Gap) or Preamble byte, in addition to the data field (from packet DA to FCS).

For ingress rate limiting, KSZ8842M provides options to selectively choose frames from all types, multicast, broadcast, and flooded unicast frames. The KSZ8842M counts the data rate from those selected type of frames. Packets are dropped at the ingress port when the data rate exceeds the specified rate limit.

For egress rate limiting, the Leaky Bucket algorithm is applied to each output priority queue for shaping output traffic . Inter frame gap is stretched on a per frame base to generate smooth, non-burst egress traffic. The throughput of each output priority queue is limited by the egress rate specified.

If any egress queue receives more traffic than the specified egress rate throughput, packets may be accumulated in the output queue and packet memory. After the memory of the queue or the port is used up, packet dropping or flow control will be triggered. As a result of congestion, the actual egress rate may be dominated by flow control/dropping at the ingress end, and may be therefore slightly less than the specified egress rate.

To reduce congestion, it is a good practice to make sure the egress bandwidth exceeds the ingress bandwidth.

MAC Filtering Function

Use the static table to assign a dedicated MAC address to a specific port. When a unicast MAC address is not recorded in the static table, it is also not learned in the dynamic MAC table. The KSZ8842M includes an option that can filter or forward unicast packets for an unknown MAC address. This option is enabled by SGCR7[7].

The unicast MAC address filtering function is useful in preventing the broadcast of unicast packets that could degrade the quality of this port in applications such as voice over Internet Protocol (VoIP).

Configuration Interface

The KSZ8842M operates only as a managed switch.

EEPROM Interface

It is optional in the KSZ8842M to use an external EEPROM. In the case that an EEPROM is not used, the EEEN pin must be tied Low or floating.

The external serial EEPROM with a standard microwire bus interface is used for non-volatile storage of information such as the host MAC address, base address, and default configuration settings. The KSZ8842M can detect if the EEPROM is a 1KB (93C46) or 4KB (93C66) EEPROM device (the 93C46 and the 93C66 are typical EEPROM devices). The EEPROM is organized as 16-bit mode.

If the EEEN pin is pulled high, the KSZ8842M performs an automatic read of the external EEPROM words 0H to 6H after the de-assertion of Reset. The EEPROM values are placed in certain host-accessible registers. EEPROM read/write functions can also be performed by software read/writes to the EEPCR registers.

The KSZ8842M EEPROM format is given below.

WORD	**15 8**	**7 0**
0H	Base Address	
1H	Host MAC Address Byte 2	Host MAC Address Byte 1
2H	Host MAC Address Byte 4	Host MAC Address Byte 3
3H	Host MAC Address Byte 6	Host MAC Address Byte 5
4H	Reserved	
5H	Reserved	
6H	ConfigParam (see Table 13)	
7H-3FH	Not used for KSZ8842M (available for user to use)	

Table 12. EEPROM Format

The format for ConfigParam is shown in Table 13.

Bit	Bit Name	Description
15 -2	Reserved	Reserved
1	Clock_Rate	**Internal clock rate selection** 0: 125 MHz 1: 25 MHz Note: At power up, this chip operates on 125 MHz clock. The internal frequency can be dropped to 25 MHz via the external EEPROM.
0	ASYN_8bit	**Async 8-bit or 16-bit bus select** 1= bus is configured for 16-bit width 0= bus is configured for 8-bit width (32-bit width, KSZ8842-32, don't care this bit setting)

Table 13. ConfigParam Word in EEPROM Format

Loopback Support

The KSZ8842M provides loopback support for remote diagnostic of failure. In loopback mode, the speed at both PHY ports will be set to 100BASE-TX full-duplex mode. Two types of loopback are supported: Far-end Loopback and Near-end (Remote) Loopback.

Far-end Loopback

Far-end loopback is conducted between the KSZ8842M's two PHY ports. The loopback path starts at the "Originating." PHY port's receive inputs (RXP/RXM), wraps around at the "loopback" PHY port's PMD/PMA, and ends at the "Originating" PHY port's transmit outputs (TXP/TXM).

Bit [8] of registers P1CR4 and P2CR4 is used to enable far-end loopback for ports 1 and 2, respectively. Alternatively, Bit [14] of registers P1MBCR and P2MBCR can also be used to enable far-end loopback. The port 2 far-end loopback path is illustrated in the Figure 14.

Near-end (Remote) Loopback

Near-end (Remote) loopback is conducted at either PHY port 1 or PHY port 2 of the KSZ8842M. The loopback path starts at the PHY port's receive inputs (RXPx/RXMx), wraps around at the same PHY port's PMD/PMA, and ends at the PHY port's transmit outputs (TXPx/TXMx).

Bit [1] of registers P1PHYCTRL and P2PHYCTRL is used to enable near-end loopback for ports 1 and 2, respectively. Alternatively, Bit [9] of registers P1SCSLMD and P2SCSLMD can also be used to enable near-end loopback. The both ports 1 and 2 near-end loopback paths are illustrated in the following Figure 15.

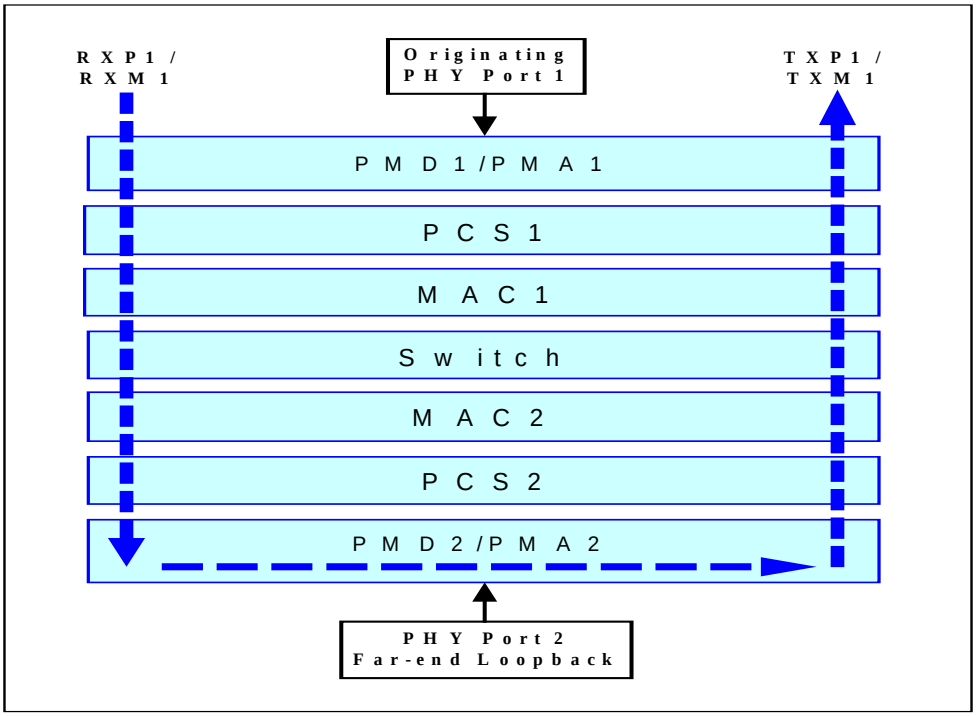

Figure 14. Port 2 Far-End Loopback Path

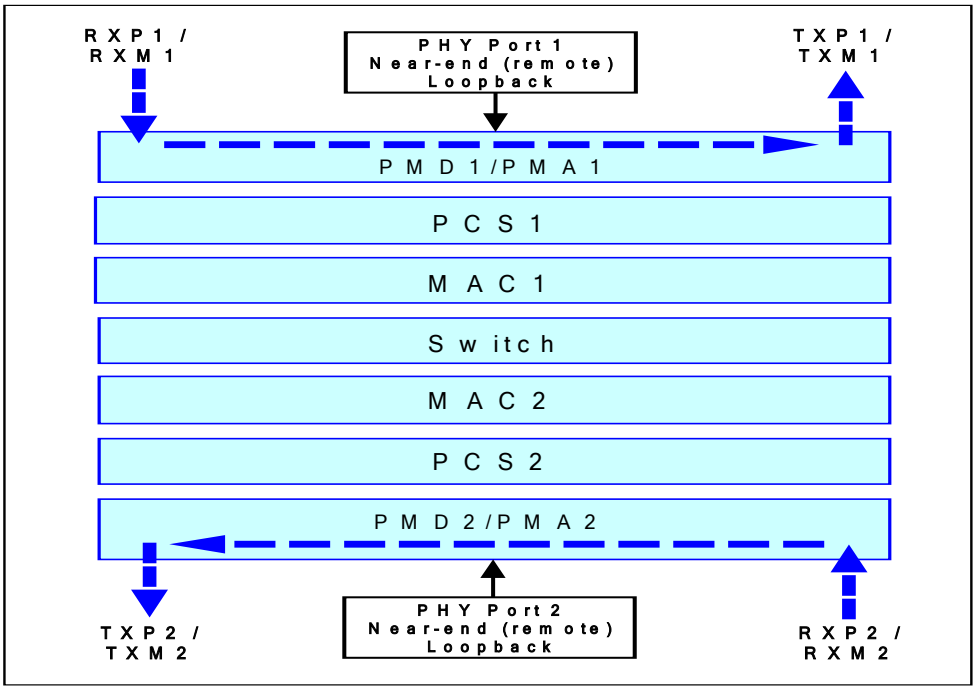

Figure 15. Port 1 and port 2 Near-End (Remote) Loopback Path

CPU Interface I/O Registers

The KSZ8842M provides an EISA-like, ISA-like, or VLBUS-like bus interface for the CPU to access its internal I/O registers. I/O registers serve as the address that the microprocessor uses when communicating with the device. This is used for configuring operational settings, reading or writing control, status information, and transferring packets by reading and writing through the packet data registers.

I/O Registers

Input/Output (I/O) registers are limited to 16 locations as required by most ISA bus-based systems; therefore, registers are assigned to different banks. The last word of the I/O register locations (0xE - 0xF) is shared by all banks and can be used to change the bank in use.

The following I/O Space Mapping Tables apply to 8, 16 or 32-bit bus products. Depending on the bus interface used and byte enable signals (BE[3:0]N control byte access), each I/O access can be performed as an 8-bit, 16-bit, or 32-bit operation. (The KSZ8842M is not limited to 8/16-bit performance and 32-bit read/write are also supported).

Internal I/O Space Mapping

I/O Register Location			Bank Location							
32-Bit	**16-Bit**	**8-Bit**	**Bank 0**	**Bank 1**	**Bank 2**	**Bank 3**	**Bank 4**	**Bank 5**	**Bank 6**	**Bank 7**
0x0 To 0x3	0x0 - 0x1	0x0	Base Address [7:0]	Reserved	Host MAC Address Low [7:0]	On-Chip Bus Control [7:0]	Reserved			
		0x1	Base Address [15:8]		Host MAC Address Low [15:8]	On-Chip Bus Control [15:8]				
	0x2 - 0x3	0x2	Reserved	Reserved	Host MAC Address Mid [7:0]	EEPROM Control [7:0]	Reserved			
		0x3			Host MAC Address Mid [15:8]	EEPROM Control [15:8]				
0x4 To 0x7	0x4 - 0x5	0x4	Reserved	Reserved	Host MAC Address High [7:0]	Memory BIST Info [7:0]	Reserved			
		0x5			Host MAC Address High [15:8]	Memory BIST Info [15:8]				
	0x6 - 0x7	0x6	Bus Error Status [7:0]	Reserved	Reserved	Global Reset [7:0]	Reserved			
		0x7	Bus Error Status [15:8]			Global Reset [15:8]				
0x8 To 0xB	0x8 - 0x9	0x8	Bus Burst Length [7:0]	Reserved	Reserved	Bus Configuration [7:0]	Reserved			
		0x9	Bus Burst Length [15:8]			Bus Configuration [15:8]				
	0xA - 0xB	0xA	Reserved							
		0xB								
0xC To 0xF	0xC - 0xD	0xC	Reserved							
		0xD								
	0xE - 0xF	0xE	Bank Select [7:0]							
		0xF	Bank Select [15:8]							

Internal I/O Space Mapping (continued)

I/O Register Location			Bank Location							
32-Bit	16-Bit	8-Bit	Bank 8	Bank 9	Bank 10	Bank 11	Bank 12	Bank 13	Bank 14	Bank 15
0x0 To 0x3	0x0 - 0x1	0x0	Reserved							
		0x1								
	0x2 - 0x3	0x2	Reserved							
		0x3								
0x4 To 0x7	0x4 - 0x5	0x4	Reserved							
		0x5								
	0x6 - 0x7	0x6	Reserved							
		0x7								
0x8 To 0xB	0x8 - 0x9	0x8	Reserved							
		0x9								
	0xA - 0xB	0xA	Reserved							
		0xB								
0xC To 0xF	0xC - 0xD	0xC	Reserved							
		0xD								
	0xE - 0xF	0xE	Bank Select [7:0]							
		0xF	Bank Select [15:8]							

Internal I/O Space Mapping (continued)

I/O Register Location			Bank Location							
32-Bit	**16-Bit**	**8-Bit**	**Bank 16**	**Bank 17**	**Bank 18**	**Bank 19**	**Bank 20**	**Bank 21**	**Bank 22**	**Bank 23**
0x0 To 0x3	0x0 - 0x1	0x0	Transmit Control [7:0]	TXQ Command [7:0]	Interrupt Enable [7:0]	Multicast Table 0 [7:0]	Reserved			
		0x1	Transmit Control [15:8]	TXQ Command [15:8]	Interrupt Enable [15:8]	Multicast Table 0 [15:8]				
	0x2 - 0x3	0x2	Transmit Status [7:0]	RXQ Command [7:0]	Interrupt Status [7:0]	Multicast Table 1 [7:0]	Reserved			
		0x3	Transmit Status [15:8]	RXQ Command [15:8]	Interrupt Status [15:8]	Multicast Table 1 [15:8]				
0x4 To 0x7	0x4 - 0x5	0x4	Receive Control [7:0]	TX Frame Data Pointer [7:0]	Receive Status [7:0]	Multicast Table 2 [7:0]	Reserved			
		0x5	Receive Control [15:8]	TX Frame Data Pointer [15:8]	Receive Status [15:8]	Multicast Table 2 [15:8]				
	0x6 - 0x7	0x6	Reserved	RX Frame Data Pointer [7:0]	Receive Byte Counter [7:0]	Multicast Table 3 [7:0]	Reserved			
		0x7		RX Frame Data Pointer [15:8]	Receive Byte Counter [15:8]	Multicast Table 3 [15:8]				
0x8 To 0xB	0x8 - 0x9	0x8	TXQ Memory Information [7:0]	QMU Data Low [7:0]	Reserved	Reserved	Reserved			
		0x9	TXQ Memory Information [15:8]	QMU Data Low [15:8]						
	0xA - 0xB	0xA	RXQ Memory Information [7:0]	QMU Data High [7:0]	Reserved					
		0xB	RXQ Memory Information [15:8]	QMU Data High [15:8]						
0xC To 0xF	0xC - 0xD	0xC	Reserved							
		0xD								
	0xE - 0xF	0xE	Bank Select [7:0]							
		0xF	Bank Select [15:8]							

Internal I/O Space Mapping (continued)

I/O Register Location			Bank Location							
32-Bit	16-Bit	8-Bit	Bank 24	Bank 25	Bank 26	Bank 27	Bank 28	Bank 29	Bank 30	Bank 31
0x0 To 0x3	0x0 - 0x1	0x0	Reserved							
		0x1								
	0x2 - 0x3	0x2	Reserved							
		0x3								
0x4 To 0x7	0x4 - 0x5	0x4	Reserved							
		0x5								
	0x6 - 0x7	0x6	Reserved							
		0x7								
0x8 To 0xB	0x8 - 0x9	0x8	Reserved							
		0x9								
	0xA - 0xB	0xA	Reserved							
		0xB								
0xC To 0xF	0xC - 0xD	0xC	Reserved							
		0xD								
	0xE - 0xF	0xE	Bank Select [7:0]							
		0xF	Bank Select [15:8]							

Internal I/O Space Mapping (continued)

I/O Register Location			Bank Location							
32-Bit	**16-Bit**	**8-Bit**	**Bank 32**	**Bank 33**	**Bank 34**	**Bank 35**	**Bank 36**	**Bank 37**	**Bank 38**	**Bank 39**
0x0 To 0x3	0x0 - 0x1	0x0	Switch ID and Enable [7:0]	Switch Global Control 6 [7:0]	Reserved					MAC Address 1 [7:0]
		0x1	Switch ID and Enable [15:8]	Switch Global Control 6 [15:8]						MAC Address 1 [15:8]
	0x2 - 0x3	0x2	Switch Global Control 1 [7:0]	Switch Global Control 7 [7:0]	Reserved					MAC Address 2 [7:0]
		0x3	Switch Global Control 1 [15:8]	Switch Global Control 7 [15:8]						MAC Address 2 [15:8]
0x4 To 0x7	0x4 - 0x5	0x4	Switch Global Control 2 [7:0]	Reserved						MAC Address 3 [7:0]
		0x5	Switch Global Control 2 [15:8]							MAC Address 3 [15:8]
	0x6 - 0x7	0x6	Switch Global Control 3 [7:0]	Reserved						
		0x7	Switch Global Control 3 [15:8]							
0x8 To 0xB	0x8 - 0x9	0x8	Switch Global Control 4 [7:0]	Reserved						
		0x9	Switch Global Control 4 [15:8]							
	0xA - 0xB	0xA	Switch Global Control 5 [7:0]	Reserved						
		0xB	Switch Global Control 5 [15:8]							
0xC To 0xF	0xC - 0xD	0xC	Reserved							
		0xD								
	0xE - 0xF	0xE	Bank Select [7:0]							
		0xF	Bank Select [15:8]							

Internal I/O Space Mapping (continued)

I/O Register Location			Bank Location							
32-Bit	**16-Bit**	**8-Bit**	**Bank 40**	**Bank 41**	**Bank 42**	**Bank 43**	**Bank 44**	**Bank 45**	**Bank 46**	**Bank 47**
0x0 To 0x3	0x0 - 0x1	0x0	TOS Priority Control 1 [7:0]	TOS Priority Control 7 [7:0]	Indirect Access Ctrl. [7:0]	Reserved	Digital Test Status [7:0]	PHY1 MII-Register Basic Control [7:0]	PHY2 MII-Register Basic Control [7:0]	PHY1 LinkMD Control/Status [7:0]
		0x1	TOS Priority Control 1 [15:8]	TOS Priority Control 7 [15:8]	Indirect Access Ctrl. [15:8]		Digital Test Status [15:8]	PHY1 MII-Register Basic Control [15:8]	PHY2 MII-Register Basic Control [15:8]	PHY1 LinkMD Control/Status [15:8]
	0x2 - 0x3	0x2	TOS Priority Control 2 [7:0]	TOS Priority Control 8 [7:0]	Indirect Access Data 1 [7:0]	Reserved	Analog Test Status [7:0]	PHY1 MII-Register Basic Status [7:0]	PHY2 MII-Register Basic Status [7:0]	PHY1 Special Control/Status [7:0]
		0x3	TOS Priority Control 2 [15:8]	TOS Priority Control 8 [15:8]	Indirect Access Data 1 [15:8]		Analog Test Status [15:8]	PHY1 MII-Register Basic Status [15:8]	PHY2 MII-Register Basic Status [15:8]	PHY1 Special Control/Status [15:8]
0x4 To 0x7	0x4 - 0x5	0x4	TOS Priority Control 3 [7:0]	Reserved	Indirect Access Data 2 [7:0]	Reserved	Digital Test Control [7:0]	PHY1 PHYID Low [7:0]	PHY2 PHYID Low [7:0]	PHY2 LinkMD Control/Status [7:0]
		0x5	TOS Priority Control 3 [15:8]		Indirect Access Data 2 [15:8]		Digital Test Control [15:8]	PHY1 PHYID Low [15:8]	PHY2 PHYID Low [15:8]	PHY2 LinkMD Control/Status [15:8]
	0x6 - 0x7	0x6	TOS Priority Control 4 [7:0]	Reserved	Indirect Access Data 3 [7:0]	Reserved	Analog Test Control 0 [7:0]	PHY1 PHYID High [7:0]	PHY2 PHYID High [7:0]	PHY2 Special Control/Status [7:0]
		0x7	TOS Priority Control 4 [15:8]		Indirect Access Data 3 [15:8]		Analog Test Control 0 [15:8]	PHY1 PHYID High [15:8]	PHY2 PHYID High [15:8]	PHY2 Special Control/Status [15:8]
0x8 To 0xB	0x8 - 0x9	0x8	TOS Priority Control 5 [7:0]	Reserved	Indirect Access Data 4 [7:0]	Reserved	Analog Test Control 1 [7:0]	PHY1 A.N. Advertisement [7:0]	PHY2 A.N. Advertisement [7:0]	Reserved
		0x9	TOS Priority Control 5 [15:8]		Indirect Access Data 4 [15:8]		Analog Test Control 1 [15:8]	PHY1 A.N. Advertisement [15:8]	PHY2 A.N. Advertisement [15:8]	
	0xA - 0xB	0xA	TOS Priority Control 6 [7:0]	Reserved	Indirect Access Data 5 [7:0]	Reserved	Analog Test Control 2 [7:0]	PHY1 A.N. Link Partner Ability [7:0]	PHY2 A.N. Link Partner Ability [7:0]	Reserved
		0xB	TOS Priority Control 6 [15:8]		Indirect Access Data 5 [15:8]		Analog Test Control 2 [15:8]	PHY1 A.N. Link Partner Ability [15:8]	PHY2 A.N. Link Partner Ability [15:8]	
0xC To 0xF	0xC - 0xD	0xC	Reserved							
		0xD								
	0xE - 0xF	0xE	Bank Select [7:0]							
		0xF	Bank Select [15:8]							

Internal I/O Space Mapping (continued)

I/O Register Location			Bank Location							
32-Bit	**16-Bit**	**8-Bit**	**Bank 48**	**Bank 49**	**Bank 50**	**Bank 51**	**Bank 52**	**Bank 53**	**Bank 54**	**Bank 55**
0x0 To 0x3	0x0 - 0x1	0x0	Port 1 Control 1 [7:0]	Port 1 PHY Special Control/Status, LinkMD [7:0]	Port 2 Control 1 [7:0]	Port 2 PHY Special Control/Status, LinkMD [7:0]	Host Port Control 1 [7:0]	Reserved		
		0x1	Port 1 Control 1 [15:8]	Port 1 PHY Special Control/Status, LinkMD [15:8]	Port 2 Control 1 [15:8]	Port 1 PHY Special Control/Status, LinkMD [15:8]	Host Port Control 1 [15:8]			
	0x2 - 0x3	0x2	Port 1 Control 2 [7:0]	Port 1 Control 4 [7:0]	Port 2 Control 2 [7:0]	Port 2 Control 4 [7:0]	Host Port Control 2 [7:0]	Reserved		
		0x3	Port 1 Control 2 [15:8]	Port 1 Control 4 [15:8]	Port 2 Control 2 [15:8]	Port 2 Control 4 [15:8]	Host Port Control 2 [15:8]			
0x4 To 0x7	0x4 - 0x5	0x4	Port 1 VID Control [7:0]	Port 1 Status [7:0]	Port 2 VID Control [7:0]	Port 2 Status [7:0]	Host Port VID Control [7:0]	Reserved		
		0x5	Port 1 VID Control [15:8]	Port 1 Status [15:8]	Port 2 VID Control [15:8]	Port 2 Status [15:8]	Host Port VID Control [15:8]			
	0x6 - 0x7	0x6	Port 1 Control 3 [7:0]	Reserved	Port 2 Control 3 [7:0]	Reserved	Host Port Control 3 [7:0]	Reserved		
		0x7	Port 1 Control 3 [15:8]		Port 2 Control 3 [15:8]		Host Port Control 3 [15:8]			
0x8 To 0xB	0x8 - 0x9	0x8	Port1 Ingress Rate Control [7:0]	Reserved	Port2 Ingress Rate Control [7:0]	Reserved	Host Port Ingress Rate Control [7:0]	Reserved		
		0x9	Port1 Ingress Rate Control [15:8]		Port2 Ingress Rate Control [15:8]		Host Port Ingress Rate Control [15:8]			
	0xA - 0xB	0xA	Port1 Egress Rate Control [7:0]	Reserved	Port2 Egress Rate Control [7:0]	Reserved	Host Port Egress Rate Control [7:0]	Reserved		
		0xB	Port1 Egress Rate Control [15:8]		Port2 Egress Rate Control [15:8]		Host Port Egress Rate Control [15:8]			
0xC To 0xF	0xC - 0xD	0xC	Reserved							
		0xD								
	0xE - 0xF	0xE	Bank Select [7:0]							
		0xF	Bank Select [15:8]							

Internal I/O Space Mapping (continued)

I/O Register Location			Bank Location							
32-Bit	16-Bit	8-Bit	Bank 56	Bank 57	Bank 58	Bank 59	Bank 60	Bank 61	Bank 62	Bank 63
0x0 To 0x3	0x0 - 0x1	0x0	Reserved							
		0x1								
	0x2 - 0x3	0x2	Reserved							
		0x3								
0x4 To 0x7	0x4 - 0x5	0x4	Reserved							
		0x5								
	0x6 - 0x7	0x6	Reserved							
		0x7								
0x8 To 0xB	0x8 - 0x9	0x8	Reserved							
		0x9								
	0xA - 0xB	0xA	Reserved							
		0xB								
0xC To 0xF	0xC - 0xD	0xC	Reserved							
		0xD								
	0xE - 0xF	0xE	Bank Select [7:0]							
		0xF	Bank Select [15:8]							

Register Map: Switch & MAC/PHY

Do not write to bit values or to registers defined as Reserved. Manipulating reserved bits or registers causes unpredictable and often fatal results. If the user wants to write to these reserved bits, the user has to read back these reserved bits (RO or RW) first, then “OR” with the read value of the reserved bits and write back to these reserved bits.

Bit Type Definition

RO = Read only.

RW = Read/Write.

W1C = Write 1 to Clear (writing a one to this bit clears it).

Bank 0-63 Bank Select Register (0x0E): BSR (same location in all Banks)

The bank select register is used to select or to switch between different sets of register banks for I/O access. There are a total of 64 banks available to select, including the built-in switch engine registers.

Bit	Default Value	R/W	Description
15-6	0x000	RO	Reserved
5-0	0x00	R/W	**BSA Bank Select Address Bits** BSA bits select the I/O register bank in use. This register is always accessible regardless of the register bank currently selected. Notes: The bank select register can be accessed as a doubleword (32-bit) at offset 0xC, as a word (16-bit) at offset 0xE, or as a byte (8-bit) at offset 0xE. A doubleword write to offset 0xC writes to the BANK Select Register but does not write to registers 0xC and 0xD; it only writes to register 0xE.

Bank 0 Base Address Register (0x00): BAR

This register holds the base address for decoding a device access. Its value is loaded from the external EEPROM (0x0H) upon a power-on reset if the EEPROM Enable (EEEN) pin is tied to High. Its value can also be modified after reset. Writing to this register does not store the value into the EEPROM. When the EEEN pin is tied to Low, the default base address is 0x0300.

Bit	Default Value	R/W	Description
15-8	0x03 if EEEN is Low or, the value from EEPROM if EEEN is High	RW	**BARH Base Address High** These bits are compared against the address on the bus ADDR[15:8] to determine the BASE for the KSZ8842M registers.
7-5	0x0 if EEEN is Low or, the value from EEPROM if EEEN is High	RW	**BARL Base Address Low** These bits are compared against the address on the bus ADDR[7:5] to determine the BASE for the KSZ8842M registers.
4-0	0x00	RO	Reserved

Bank 0 Bus Error Status Register (0x06): BESR

This register flags the different kinds of errors on the host bus.

Bit	Default Value	R/W	Description
15	0	RO	**IBEC Illegal Byte Enable Combination** 1: illegal byte enable combination occurs. The illegal combination value can be found from bit 14 to bit 11. 0: legal byte enable combination. Write 1 to clear.
14-11	-	RO	**IBECV Illegal Byte Enable Combination Value** Bit 14: byte enable 3. Bit 13: byte enable 2. Bit 12: byte enable 1. Bit 11: byte enable 0. This value is valid only when bit 15 is set to 1.
10	0	RO	**SSAXFER Simultaneous Synchronous and Asnychronous Transfers** 1: Synchronous and Asnychronous Transfers occur simultaneously. 0: normal. Write 1 to clear.
9-0	0x000	RO	Reserved

Bank 0 Bus Burst Length Register (0x08): BBLR

Before the burst can be sent, the burst length needs to be programmed.

Bit	Default Value	R/W	Description
15	0	RO	Reserved
14-12	0x0	RW	**BRL Burst Length** (for burst read and write) 000: single. 011: fixed burst read length of 4. 101: fixed burst read length of 8. 111: fixed burst read length of 16.
11-0	0x000	RO	Reserved

Bank 1: Reserved

Except Bank Select Register (0xE).

Bank 2 Host MAC Address Register Low (0x00): MARL

This register along with the other two Host MAC address registers are loaded starting at word location 0x1 of the EEPROM upon hardware reset. The software driver can modify the register, but it will not modify the original Host MAC address value in the EEPROM. These six bytes of Host MAC address in external EEPROM are loaded to these three registers as mapping below:

MARL[15:0] = EEPROM 0x1(MAC Byte 2 and 1)

MARM[15:0] = EEPROM 0x2(MAC Byte 4 and 3)

MARH[15:0] = EEPROM 0x3(MAC Byte 6 and 5)

The Host MAC address is used to define the individual destination address that the KSZ8842M responds to when receiving frames. Network addresses are generally expressed in the form of 01:23:45:67:89:AB, where the bytes are received from left to right, and the bits within each byte are received from right to left (LSB to MSB). For example, the actual transmitted and received bits are on the order of 10000000 11000100 10100010 11100110 10010001 11010101.

These three registers value for Host MAC address 01:23:45:67:89:AB will be held as below:

MARL[15:0] = 0x89AB

MARM[15:0] = 0x4567

MARH[15:0] = 0x0123

The following table shows the register bit fields.

Bit	Default Value	R/W	Description
15-0	-	RW	**MARL MAC Address Low** The least significant word of the MAC address.

Bank 2 Host MAC Address Register Middle (0x02): MARM

The middle word of Host MAC address.

The following table shows the register bit fields.

Bit	Default Value	R/W	Description
15-0	-	RW	**MARM MAC Address Middle** The middle word of the MAC address.

Bank 2 Host MAC Address Register High (0x04): MARH

The high word of Host MAC address.

The following table shows the register bit fields.

Bit	Default Value	R/W	Description
15-0	-	RW	**MARH MAC Address High** The Most significant word of the MAC address.

Bank 3 On-Chip Bus Control Register (0x00): OBCR

This register controls the on-chip bus speed for the KSZ8842M. It is used for power management when the external host CPU is running at a slow frequency. The default of the on-chip bus speed is 125 MHz without EEPROM. When the external host CPU is running at a higher clock rate, the on-chip bus should be adjusted for the best performance.

Bit	Default Value	R/W	Description
15-2	-	RO	Reserved
1-0	0x0	RW	**OBSC On-Chip Bus Speed Control** 00: 125MHz. 01: 62.5MHz. 10: 41.66MHz. 11: 25MHz. Note: When external EEPROM is enabled, the bit 1 in Configparm word (0x6H) is used to contol this speed as below: Bit 1 = 0 , this value will be 00 for 125 MHz. Bit 1 = 1 , this value will be 11 for 25 MHz. (User still can write these two bits to change speed after EEPROM data loaded)

Bank 3 EEPROM Control Register (0x02): EEPCR

To support an external EEPROM, tie the EEPROM Enable (EEEN) pin to High; otherwise, tie it to Low. If an external EEPROM is not used, the default chip Base Address (0x300), and the software programs the host MAC address. If an EEPROM is used in the design (EEPROM Enable pin to High), the chip Base Address and host MAC address are loaded from the EEPROM immediately after reset. The KSZ8842M allows the software to access (read and write) the EEPROM directly; that is, the EEPROM access timing can be fully controlled by the software if the EEPROM Software Access bit is set.

Bit	Default Value	R/W	Description
15-5	-	RO	Reserved
4	0	RW	**EESA EEPROM Software Access** 1: enable software to access EEPROM through bit 3 to bit 0. 0: disable software to access EEPROM.
3	-	RO	**EECB EEPROM Status Bit** Data Receive from EEPROM. This bit directly reads the EEDI pin.
2-0	0x0	RW	**EECB EEPROM Control Bits** Bit 2: Data Transmit to EEPROM. This bit directly controls the device's EEDO pin. Bit 1: Serial Clock. This bit directly controls the device's EESK pin. Bit 0: Chip Select for EEPROM. This bit directly controls the device's EECS pin.

Bank 3 Memory BIST INFO Register (0x04): MBIR

Bit	Default Value	R/W	Description
15-13	0x0	RO	Reserved
12	-	RO	**TXMBF TX Memory Bist Finish** When set, it indicates the Memory Built In Self Test completion for the TX Memory.
11	-	RO	**TXMBFA TX Memory Bist Fail** When set, it indicates the Memory Built In Self Test has failed.
10-5	-	RO	Reserved
4	-	RO	**RXMBF RX Memory Bist Finish** When set, it indicates the Memory Built In Self Test completion for the RX Memory.
3	-	RO	**RXMBFA RX Memory Bist Fail** When set, it indicates the Memory Built In Self Test has failed.
2-0	-	RO	Reserved

Bank 3 Global Reset Register (0x06): GRR

This register controls the global reset function with information programmed by the CPU.

Bit	Default Value	R/W	Description
15-1	0x0000	RO	Reserved
0	0	RW	**Global Soft Reset** 1: software reset is active. 0: software reset is inactive. Software reset will affect PHY, MAC, QMU, DMA, and the switch core, only the BIU (base address registers) remains unaffected by a software reset.

Bank 3 Bus Configuration Register (0x08): BCFG

This register is a read-only register. The bit 0 is automatically downloaded from bit 0 Configparm word of EEPROM , if pin EEEN is high (enabled EEPROM)

Bit	Default Value	R/W	Description
15-1	0x0000	RO	Reserved
0	-	RO	**Bus Configuration (only for KSZ8842-16 device)** 1: bus width is 16 bits. 0: bus width is 8 bits. (this bit is only avaiable when EEPROM is enabled)

Banks 4 – 15: Reserved

Except Bank Select Register (0xE).

Bank 16 Transmit Control Register (0x00): TXCR

This register holds control information programmed by the CPU to control the QMU transmit module function.

Bit	Default Value	R/W	Description
15	-	RO	Reserved
14	0x0	RW	Reserved
13	0x0	RW	Reserved
12-4	-	RO	Reserved
3	0x0	RW	**TXFCE Transmit Flow Control Enable** When this bit is set, the QMU sends flow control pause frames from the host port if the RX FIFO has reached its threshold. Note: the SGCR3[5] in Bank 32 also needs to be enabled.
2	0x0	RW	**TXPE Transmit Padding Enable** When this bit is set, the KSZ8842M automatically adds a padding field to a packet shorter than 64 bytes. Note: Setting this bit requires enabling the ADD CRC feature to avoid CRC errors for the transmit packet.
1	0x0	RW	**TXCE Transmit CRC Enable** When this bit is set, the KSZ8842M automatically adds a CRC checksum field to the end of a transmit frame.
0	0x0	RW	**TXE Transmit Enable** When this bit is set, the transmit module is enabled and placed in a running state. When reset, the transmit process is placed in the stopped state after the transmission of the current frame is completed.

Bank 16 Transmit Status Register (0x02): TXSR

This register keeps the status of the last transmitted frame.

Bit	Default Value	R/W	Description
15-6	0x000	RO	Reserved
5-0	-	RO	**TXFID Transmit Frame ID** This field identifies the transmitted frame. All of the transmit status information in this register belongs to the frame with this ID.

Bank 16 Receive Control Register (0x04): RXCR

This register holds control information programmed by the CPU to control the receive function.

Bit	Default Value	R/W	Description
15-11	-	RO	Reserved
10	0x0	RW	**RXFCE Receive Flow Control Enable** When this bit is set, the KSZ8842M will acknowledge a PAUSE frame from the receive interface; i.e., the outgoing packets are pending in the transmit buffer until the PAUSE frame control timer expires. When this bit is cleared, flow control is not enabled.
9	0x0	RW	**RXEFE Receive Error Frame Enable** When this bit is set, CRC error frames are allowed to be received into the RX queue. When reset, all CRC error frames are discarded.
8	-	RO	Reserved
7	0x0	RW	**RXBE Receive Broadcast Enable** When this bit is set, the RX module receives all the broadcast frames.
6	0x0	RW	**RXME Receive Multicast Enable** When this bit is set, the RX module receives all the multicast frames (including broadcast frames).
5	0x0	RW	**RXUE Receive Unicast** When this bit is set, the RX module receives unicast frames that match the 48-bit Station MAC address of the module.
4	0x0	RW	**RXRA Receive All** When this bit is set, the KSZ8842M receives all incoming frames, regardless of the frame's destination address.
3	0x0	RW	**RXSCE Receive Strip CRC** When this bit is set, the KSZ8842M strips the CRC on the received frames. Once cleared, the CRC is stored in memory following the packet.
2	0x0	RW	**QMU Receive Multicast Hash-Table Enable** When this bit is set, this bit enables the RX function to receive multicast frames that pass the CRC Hash filtering mechanism.
1	-	RO	Reserved
0	0x0	RW	**RXE Receive Enable** When this bit is set, the RX block is enabled and placed in a running state. When reset, the receive process is placed in the stopped state upon completing reception of the current frame.

Bank 16 TXQ Memory Information Register (0x08): TXMIR

This register indicates the amount of free memory available in the TXQ of the QMU module.

Bit	Default Value	R/W	Description
15-13	-	RO	Reserved
12-0	-	RO	**TXMA Transmit Memory Available** The amount of memory available is represented in units of byte. The TXQ memory is used for both frame payload, control word. There is total 4096 bytes in TXQ. Note: Software must be written to ensure that there is enough memory for the next transmit frame including control information before transmit data is written to the TXQ.

Bank 16 RXQ Memory Information Register (0x0A): RXMIR

This register indicates the amount of receive data available in the RXQ of the QMU module.

Bit	Default Value	R/W	Description
15-13	-	RO	Reserved
12-0	-	RO	**RXMA Receive Packet Data Available** The amount of Receive packet data available is represented in units of byte. The RXQ memory is used for both frame payload, status word. There is total 4096 bytes in RXQ. This counter will update after a complete packet is received and also issues an interrupt when receive interrupt enable IER[13] in Bank 18 is set. Note: Software must be written to empty the RXQ memory to allow for the new RX frame. If this is not done, the frame may be discarded as a result of insufficient RXQ memory.

Bank 17 TXQ Command Register (0x00): TXQCR

This register is programmed by the Host CPU to issue a transmit command to the TXQ. The present transmit frame in the TXQ memory is queued for transmit.

Bit	Default Value	R/W	Description
15-1	-	RO	Reserved
0	0x0	RW	**TXETF Enqueue TX Frame** When this bit is set as 1, the current TX frame prepared in the TX buffer is queued for transmit. Note: This bit is self-clearing after the frame is finished transmitting. The software should wait for the bit to be cleared before setting up another new TX frame.

Bank 17 RXQ Command Register (0x02): RXQCR

This register is programmed by the Host CPU to issue release command to the RXQ. The current frame in the RXQ frame buffer is read out by the host and the memory space is released.

Bit	Default Value	R/W	Description
15-1	-	RO	Reserved Do not write to this register.
0	0x0	RW	**RXRRF Release RX Frame** When this bit is set as 1, the current RX frame buffer is released. Note: This bit is self-clearing after the frame memory is released. The software should wait for the bit to be cleared before processing new RX frames.

Bank 17 TX Frame Data Pointer Register (0x04): TXFDPR

The value of this register determines the address to be accessed within the TXQ frame buffer. When the AUTO increment is set, It will automatically increment the pointer value on Write accesses to the data register.

The counter is incremented by one for every byte access, by two for every word access, and by four for every double word access.

Bit	Default Value	R/W	Description
15	-	RO	Reserved
14	0x0	RW	**TXFPAI TX Frame Data Pointer Auto Increment** When this bit is set, the TX Frame data pointer register increments automatically on accesses to the data register. The increment is by one for every byte access, by two for every word access, and by four for every doubleword access. When this bit is reset, the TX frame data pointer is manually controlled by user to access the TX frame location.
13-11	-	RO	Reserved
10-0	0x0	RW	**TXFP TX Frame Pointer** TX Frame Pointer index to the Frame Data register for access. This field reset to next available TX frame location when the TX Frame Data has been

			enqueued through the TXQ command register.

Bank 17 RX Frame Data Pointer Register (0x06): RXFDPR

The value of this register determines the address to be accessed within the RXQ frame buffer. When the Auto Increment is set, it will automatically increment the RXQ Pointer on read accesses to the data register.

The counter is incremented is by one for every byte access, by two for every word access, and by four for every double word access.

Bit	Default Value	R/W	Description
15	-	RO	Reserved
14	0x0	RW	**RXFPAI RX Frame Pointer Auto Increment** When this bit is set, the RXQ Address register increments automatically on accesses to the data register. The increment is by one for every byte access, by two for every word access, and by four for every double word access. When this bit is reset, the RX frame data pointer is manually controlled by user to access the RX frame location.
13-11	-	RO	Reserved
10-0	0x0	RW	**RXFP RX Frame Pointer** RX Frame data pointer index to the Data register for access. This field reset to next available RX frame location when RX Frame release command is issued (through the RXQ command register).

Bank 17 QMU Data Register Low (0x08): QDRL

This register QDRL(0x08-0x09) contains the Low data word presently addressed by the pointer register. Reading maps from the RXQ, and writing maps to the TXQ.

Bit	Default Value	R/W	Description
15-0	-	RW	**QDRL Queue Data Register Low** This register is mapped into two uni-directional buffers for 16-bit buses, and one uni-directional buffer for 32-bit buses, (TXQ when Write, RXQ when Read) that allow moving words to and from the KSZ8842M regardless of whether the pointer is even, odd, or Dword aligned. Byte, word, and Dword access can be mixed on the fly in any order. This register along with DQRH is mapped into two consecutive word locations for 16-bit buses, or one word location for 32-bit buses, to facilitate Dword move operations.

Bank 17 QMU Data Register High (0x0A): QDRH

This register QDRH(0x0A-0x0B) contains the High data word presently addressed by the pointer register. Reading maps from the RXQ, and writing maps to the TXQ.

Bit	Default Value	R/W	Description
15-0	-	RW	**QDRL Queue Data Register High** This register is mapped into two uni-directional buffers for 16-bit buses, and one uni-directional buffer for 32-bit buses, (TXQ when Write, RXQ when Read) that allow moving words to and from the KSZ8842M regardless of whether the pointer is even, odd, or dword aligned. Byte, word, and Dword access can be mixed on the fly in any order. This register along with DQRL is mapped into two consecutive word locations for 16-bit buses, or one word location for 32-bit buses, to facilitate Dword move operations.

Bank 18 Interrupt Enable Register (0x00): IER

This register enables the interrupts from the QMU and other sources.

Bit	Default Value	R/W	Description
15	0x0	RW	**LCIE Link Change Interrupt Enable** When this bit is set, the link change interrupt is enabled. When this bit is reset, the link change interrupt is disabled.
14	0x0	RW	**TXIE Transmit Interrupt Enable** When this bit is set, the transmit interrupt is enabled. When this bit is reset, the transmit interrupt is disabled.
13	0x0	RW	**RXIE Receive Interrupt Enable** When this bit is set, the receive interrupt is enabled. When this bit is reset, the receive interrupt is disabled.
12	0x0	RW	Reserved
11	0x0	RW	**RXOIE Receive Overrun Interrupt Enable** When this bit is set, the Receive Overrun interrupt is enabled. When this bit is reset, the Receive Overrun interrupt is disabled.
10	0x0	RW	Reserved
9	0x0	RW	**TXPSIE Transmit Process Stopped Interrupt Enable** When this bit is set, the Transmit Process Stopped interrupt is enabled. When this bit is reset, the Transmit Process Stopped interrupt is disabled.
8	0x0	RW	**RXPSIE Receive Process Stopped Interrupt Enable** When this bit is set, the Receive Process Stopped interrupt is enabled. When this bit is reset, the Receive Process Stopped interrupt is disabled.
7	0x0	RW	**RXEFIE Receive Error Frame Interrupt Enable** When this bit is set, the Receive error frame interrupt is enabled. When this bit is reset, the Receive error frame interrupt is disabled.
6-0	-	RO	Reserved

Bank 18 Interrupt Status Register (0x02): ISR

This register contains the status bits for all QMU and other interrupt sources.

When the corresponding enable bit is set, it causes the interrupt pin to be asserted.

This register is usually read by the host CPU and device drivers during interrupt service routine or polling. The register bits are not cleared when read. The user has to write “1” to clear

Bit	Default Value	R/W	Description
15	0x0	RO (W1C)	**LCIS Link Change Interrupt Status** When this bit is set, it indicates that the link status has changed from link up to link down, or link down to link up. This edge-triggered interrupt status is cleared by writing 1 to this bit.
14	0x0	RO (W1C)	**TXIS Transmit Status** When this bit is set, it indicates that the TXQ MAC has transmitted at least a frame on the MAC interface and the QMU TXQ is ready for new frames from the host. This edge-triggered interrupt status is cleared by writing 1 to this bit.
13	0x0	RO (W1C)	**RXIS Receive Interrupt Status** When this bit is set, it indicates that the QMU RXQ has received a frame from the MAC interface and the frame is ready for the host CPU to process. This edge-triggered interrupt status is cleared by writing 1 to this bit.
12	0x0	RO	Reserved
11	0x0	RO (W1C)	**RXOIS Receive Overrun Interrupt Status** When this bit is set, it indicates that the Receive Overrun status has occurred. This edge-triggered interrupt status is cleared by writing 1 to this bit.
10	0x0	RO	Reserved
9	0x1	RO (W1C)	**TXPSIE Transmit Process Stopped Status** When this bit is set, it indicates that the Transmit Process has stopped. This edge-triggered interrupt status is cleared by writing 1 to this bit.
8	0x1	RO (W1C)	**RXPSIE Receive Process Stopped Status** When this bit is set, it indicates that the Receive Process has stopped. This edge-triggered interrupt status is cleared by writing 1 to this bit.
7	0x0	RO (W1C)	**RXEFIE Receive Error Frame Interrupt Status** When this bit is set, it indicates that the Receive error frame status has occurred. This edge-triggered interrupt status is cleared by writing 1 to this bit.
6-0	-	RO	Reserved

Bank 18 Receive Status Register (0x04): RXSR

This register indicates the status of the current received frame and mirrors the Receive Status word of the Receive Frame in the RXQ.

Bit	Default Value	R/W	Description
15	-	RO	**RXFV Receive Frame Valid** When set, it indicates that the present frame in the receive packet memory is valid. The status information currently in this location is also valid. When clear, it indicates that there is either no pending receive frame or that the current frame is still in the process of receiving.
14-9	-	RO	Reserved
8	-	RO	**RXSPN Receive Source Port Number** When set, this field indicates the source port where the packet was received. Valid ports are either port 1 or port 2.
7	-	RO	**RXBF Receive Broadcast Frame** When set, it indicates that this frame has a broadcast address.
6	-	RO	**RXMF Receive Multicast Frame** When set, it indicates that this frame has a multicast address (including the broadcast address).
5	-	RO	**RXUF Receive Unicast Frame** When set, it indicates that this frame has a unicast address.
4	-	RO	Reserved
3	-	RO	**RXFT Receive Frame Type** When set, it indicates that the frame is an Ethernet-type frame (frame length is greater than 1500 bytes). When clear, it indicate that the frame is an IEEE 802.3 frame. This bit is not valid for runt frames.
2	-	RO	**RXTL Receive Frame Too Long** When set, it indicates that the frame length exceeds the maximum size of 1916 bytes. Frames that are too long are passed to the host only if the pass bad frame bit is set (bit 9 in RXCR register) Note: Frame too long is only a frame length indication and does not cause any frame truncation.
1	-	RO	**RXRF Receive Runt Frame** When set, it indicates that a frame was damaged by a collision or premature termination before the collision window has passed. Runt frames are passed to the host only if the pass bad frame bit is set (bit 9 in RXCR register).
0	-	RO	**RXCE Receive CRC Error** When set, it indicates that a CRC error has occurred on the current received frame. A CRC error frame is passed to the host only if the pass bad frame bit is set (bit 9 in RXCR register).

Bank 18 Receive Byte Counter Register (0x06): RXBC

This register indicates the status of the current received frame and mirrors the Receive Byte Count word of the Receive Frame in the RXQ.

Bit	Default Value	R/W	Description
15-11	-	RO	Reserved
10-0	-	RO	**RXBC Receive Byte Count** Receive Byte Count.

Bank 19 Multicast Table Register 0 (0x00): MTR0

The 64-bit multicast table is used for group address filtering. This value is defined as the six most significant bits from CRC circuit calculation result that is based on 48-bit of DA input. The two most significant bits select one of the four registers to be used, while the others determine which bit within the register.

Multicast table register 0.

Bit	Default Value	R/W	Description
15-0	0x0000	RW	**MTR0 Multicast Table 0** When the appropriate bit is set, if the packet received with DA matches the CRC, the hashing function is received without being filtered. When the appropriate bit is cleared, the packet will drop. Note: When the receive all (RXRA) or receive multicast (RXRM) bit is set in the RXCR, all multicast addresses are received regardless of the multicast table value.

Bank 19 Multicast Table Register 1 (0x02): MTR1

Multicast table register 1.

Bit	Default Value	R/W	Description
15-0	0x0000	RW	**MTR0 Multicast Table 1** When the appropriate bit is set, if the packet received with DA matches the CRC, the hashing function is received without being filtered. When the appropriate bit is cleared, the packet will drop. Note: When the receive all (RXRA) or receive multicast (RXRM) bit is set in the RXCR, all multicast addresses are received regardless of the multicast table value.

Bank 19 Multicast Table Register 2 (0x04): MTR2

Multicast table register 2.

Bit	Default Value	R/W	Description
15-0	0x0000	RW	**MTR0 Multicast Table 2** When the appropriate bit is set, if the packet received with DA matches the CRC, the hashing function is received without being filtered. When the appropriate bit is cleared, the packet will drop. Note: When the receive all (RXRA) or receive multicast (RXRM) bit is set in the RXCR, all multicast addresses are received regardless of the multicast table value.

Bank 19 Multicast Table Register 3 (0x06): MTR3

Multicast table register 3.

Bit	Default Value	R/W	Description
15-0	0x0000	RW	**MTR0 Multicast Table 3** When the appropriate bit is set, if the packet received with DA matches the CRC, the hashing function is received without being filtered. When the appropriate bit is cleared, the packet will drop. Note: When the receive all (RXRA) or receive multicast (RXRM) bit is set in the RXCR, all multicast addresses are received regardless of the multicast table value.

Banks 20 – 31: Reserved

Except Bank Select Register (0xE).

Bank 32 Switch ID and Enable Register (0x00): SIDER

This register contains the switch ID and the switch enable control.

Bit	Default	R/W	Description
15-8	0x88	RO	**Family ID** Chip family ID
7-4	0x0	RO	**Chip ID** 0x0 is assigned to KSZ8842M
3-1	0x0	RO	**Revision ID**
0	0	RW	**Start Switch** 1 = start the chip. 0 = switch is disabled.

Bank 32 Switch Global Control Register 1 (0x02): SGCR1

This register contains the global control for the switch function.

Bit	Default	R/W	Description
15	0	RW	**Pass All Frames** 1 = switch all packets including bad ones. Used solely for debugging purposes. Works in conjunction with Sniffer mode only.
14	0	RW	Reserved
13	1	RW	**IEEE 802.3x Transmit Direction Flow Control Enable** 1 = enables transmit direction flow control feature. 0 = will not enable transmit direction flow control feature. The switch will not generate any flow control packets.
12	1	RW	**IEEE 802.3x Receive Direction Flow Control Enable** 1 = enables receive direction flow control feature. 0 = will not enable receive direction flow control feature. The switch will not react to any received flow control packets.
11	0	RW	**Frame Length Field Check** 1 = checks frame length field in the IEEE packets. If the actual length does not match, the packet will be dropped (for Length/Type field < 1500).
10	1	RW	**Aging Enable** 1 = enable age function in the chip. 0 = disable age function in the chip.
9	0	RW	**Fast Age Enable** 1 = turn on fast age (800us).
8	0	RW	**Aggressive Back-Off Enable** 1 = enable more aggressive back off algorithm in half-duplex mode to enhance performance. This is not an IEEE standard.
7-4	-	RW	Reserved
3	0x0	RW	**Pass Flow Control Packet** 1 = switch will not filter 802.1x “flow control” packets.
2-1	-	RW	Reserved
0	0	RW	**Link Change Age** 1 = link change from “link” to “no link” will cause fast aging (<800us) to age address table faster. After an age cycle is complete, the age logic will return to normal (300 ± 75 seconds). Note: If any port is unplugged, all addresses will be automatically aged out.

Bank 32 Switch Global Control Register 2 (0x04): SGCR2

This register contains the global control for the switch function.

Bit	Default	R/W	Description
15	0	RW	**802.1Q VLAN Enable** 1 = 802.1Q VLAN mode is turned on. VLAN table must be set up before the operation. 0 = 802.1Q VLAN is disabled.
14	0	RW	**IGMP Snoop Enable On Switch Host port** 1 = IGMP snoop is enabled. All the IGMP packets are forwarded to the Switch host port. 0 = IGMP snoop is disabled.
13	0	RW	**Ipv6 MLD Snooping Enable** 1 = enable IPv6 MLD snooping
12	0	RW	**Ipv6 MLD Snooping Option** **1 = enable** IPv6 MLD snooping option
11	0	RW	**Priority Scheme Select** 0 = always TX higher priority packets first. 1 = Weighted Fair Queueing enabled. When all four queues have packets waiting to transmit, the bandwidth allocation is q3:q2:q1:a0 = 8:4:2:1. If any queues are empty, the highest non-empty queue gets one more weighting. For example, if q2 is empty, q3:q1:q0 becomes (8+1): 0:2:1.
10-9	0x0	RW	Reserved
8	0	RW	**Sniff Mode Select** 1 =performs RX and TX sniff (both the source port and destination port need to match). 0 = performs RX or TX sniff (either the source port or destination port needs to match). This is the mode used to implement RX only sniff.
7	1	RW	**Unicast Port-VLAN Mismatch Discard** 1 = no packets can cross the VLAN boundary. 0 = unicast packets (excluding unknown/multicast/broadcast) can cross the VLAN boundary.
6	1	RW	**Multicast Storm Protection Disable** 1 = “Broadcast Storm Protection” does not include multicast packets. Only DA = FFFFFFFFFFFF packets are regulated. 0 = “Broadcast Storm Protection” includes DA = FFFFFFFFFFFF and DA[40] = 1 packets.
5	1	RW	**Back Pressure Mode** 1 = carrier sense-based Back Pressure is selected. 0 = collision-based Back Pressure is selected.
4	1	RW	**Flow Control And Back Pressure Fair Mode** 1 = fair mode is selected. In this mode, if a flow control port and a non-flow control port talk to the same destination port, packets from the non-flow control port may be dropped. This prevents the flow control port from being flow controlled for an extended period of time. 0 = in this mode, if a flow control port and a non-flow control port talk to the same destination port, the flow control port is flow controlled. This may not be “fair” to the flow control port.
3	0	RW	**No Excessive Collision Drop**

Bit	Default	R/W	Description
			1 = the switch does not drop packets when 16 or more collisions occur. 0 = the switch drops packets when 16 or more collisions occur.
2	0	RW	**Huge Packet Support** 1 = accepts packet sizes up to 1916 bytes (inclusive). This bit setting overrides setting from bit 1 of the same register. 0 = the max packet size is determined by bit 1 of this register.
1	0	RW	**Legal Maximum Packet Size Check Enable** 0 = accepts packet sizes up to 1536 bytes (inclusive). 1 = 1522 bytes for tagged packets, 1518 bytes for untagged packets. Any packets larger than the specified value are dropped.
0	1	RW	**Priority Buffer Reserve** 1 = each port is pre-allocated 48 buffers, used exclusively for high priority (q3, q2, and q1) packets. Effective only when the multiple queue feature is turned on. 0 = each port is pre-allocated 48 buffers used for all priority packets (q3, q2,q1, and q0).

Bank 32 Switch Global Control Register 3 (0x06): SGCR3

This register contains the global control for the switch function.

Bit	Default	R/W	Description
15-8	0x63	RW	**Broadcast Storm Protection Rate Bit [7:0]** These bits, along with SGCR3[2:0], determine how many 64-byte blocks of packet data are allowed on an input port in a preset period. The period is 67ms for 100BT or 670ms for 10BT. The default is 1%.
7	0	RW	**Repeater Mode (Note 1)** 1 = enable repeater mode. 0 = normal mode. The switch supports only half duplex , 100BT in repeater mode.
6	0	RW	**Switch Host Half-Duplex Mode** The KSZ8842M supports only half-duplex 100-BaseT throughput in repeater mode. 1 = enable host port interface half-duplex mode, this bit must be set for repeater mode 0 = enable host port interface full-duplex mode..
5	0	RW	**Switch Flow Control Enable** 1 = enable full-duplex flow control on Switch Host port. 0 = disable full-duplex flow control on Switch Host port
4	0	RW	Reserved
3	0	RW	**Null VID Replacement** 1 = replaces NULL VID with port VID(12 bits). 0 = no replacement for NULL VID.
2-0	0x0	RW	**Broadcast Storm Protection Rate Bit [10:8]** These bits, along with SGCR3[15:8] determine how many 64-byte blocks of packet data are allowed on an input port in a preset period. The period is 67ms for 100BT or 670ms for 10BT. The default is 1%.

Rate: 148,800 frames/sec * 67 ms/interval * 1% = 99 frames/interval (approx.) = 0x63.

Note 1: User has to set bit 13 (100Mbps), bit 12 (auto-negotiation disabled) and bit 8 (half duplex) in both P1MBCR and P2MBCR registers for repeater mode.

Bank 32 Switch Global Control Register 4 (0x08): SGCR4

This register contains the global control for the switch function.

Bit	Default	R/W	Description
15-0	0x2400	RW	Reserved

Bank 32 Switch Global Control Register 5 (0x0A): SGCR5

This register contains the global control for the switch function.

<table>
<tr><th>Bit</th><th>Default</th><th>R/W</th><th>Description</th></tr>
<tr><td>15</td><td>0</td><td>RW</td><td>LEDSEL1
See the description in bit 9.</td></tr>
<tr><td>14-12</td><td>0x0</td><td>RW</td><td>Reserved</td></tr>
<tr><td>11-10</td><td>0x2</td><td>RW</td><td>Reserved</td></tr>
<tr><td>9</td><td>0</td><td>RW</td><td>LEDSEL0
These two bits, LEDSEL1 and LEDSEL0, are used to select LED mode.
Port n LED indicators, (where n = 1 for port 1 and n =2 for port 2) defined as below:
<table>
<tr><th></th><th colspan="2">[LEDSEL1, LEDSEL0]</th></tr>
<tr><td></td><td>[0, 0]</td><td>[0, 1]</td></tr>
<tr><td>PnLED3</td><td>------</td><td>------</td></tr>
<tr><td>PnLED2</td><td>LINK/ACT</td><td>100LINK/ACT</td></tr>
<tr><td>PnLED1</td><td>FULL_DPX/COL</td><td>10LINK/ACT</td></tr>
<tr><td>PnLED0</td><td>SPEED</td><td>FULL_DPX</td></tr>
</table>
<table>
<tr><th></th><th colspan="2">[LEDSEL1, LEDSEL0]</th></tr>
<tr><td></td><td>[1, 0]</td><td>[1, 1]</td></tr>
<tr><td>PnLED3</td><td>ACT</td><td>------</td></tr>
<tr><td>PnLED2</td><td>LINK</td><td>------</td></tr>
<tr><td>PnLED1</td><td>FULL_DPX/COL</td><td>------</td></tr>
<tr><td>PnLED0</td><td>SPEED</td><td>------</td></tr>
</table>
For repeater mode:
<table>
<tr><th></th><th colspan="2">[LEDSEL1, LEDSEL0]</th></tr>
<tr><td></td><td>[0, 0]</td><td>[0, 1] [1, 0] [1, 1]</td></tr>
<tr><td>P1LED3; P2LED3</td><td>RPT_COL; RPT_ACT</td><td>------</td></tr>
<tr><td>P1LED2; P2LED2</td><td>RPT_LINK3/RX; RPT_ERR3</td><td>------</td></tr>
<tr><td>P1LED1; P2LED1</td><td>RPT_LINK2/RX; RPT_ERR2</td><td>------</td></tr>
<tr><td>P1LED0; P2LED0</td><td>RPT_LINK1/RX; RPT_ERR1</td><td>------</td></tr>
</table></td></tr>
<tr><td>8</td><td>0</td><td>RW</td><td>Reserved</td></tr>
<tr><td>7-0</td><td>0x35</td><td>RW</td><td>Reserved</td></tr>
</table>

Bank 33 Switch Global Control Register 6 (0x00): SGCR6

Bit	Default	R/W	Description
15-14	0x3	R/W	**Tag_0x7** IEEE 802.1p mapping. The value in this field is used as the frame's priority when its IEEE Tag has a value of 0x7.
13-12	0x3	R/W	**Tag_0x6** IEEE 802.1p mapping. The value in this field is used as the frame's priority when its IEEE Tag has a value of 0x6.
11-10	0x2	R/W	**Tag_0x5** IEEE 802.1p mapping. The value in this field is used as the frame's priority when its IEEE Tag has a value of 0x5.
9-8	0x2	R/W	**Tag_0x4** IEEE 802.1p mapping. The value in this field is used as the frame's priority when its IEEE Tag has a value of 0x4.
7-6	0x1	R/W	**Tag_0x3** IEEE 802.1p mapping. The value in this field is used as the frame's priority when its IEEE Tag has a value of 0x3.
5-4	0x1	R/W	**Tag_0x2** IEEE 802.1p mapping. The value in this field is used as the frame's priority when its IEEE Tag has a value of 0x2.
3-2	0x0	R/W	**Tag_0x1** IEEE 802.1p mapping. The value in this field is used as the frame's priority when its IEEE Tag has a value of 0x1.
1-0	0x0	R/W	**Tag_0x0** IEEE 802.1p mapping. The value in this field is used as the frame's priority when its IEEE Tag has a value of 0x0.

Bank 33 Switch Global Control Register 7 (0x02): SGCR7

Bit	Default	R/W	Description
15-8	0x00	R/W	Reserved
7	0	R/W	**Unknown Default Port Enable** Send packets with unknown destination address to specified ports in bits [2:0]. 1 = enable to send unknown DA packet
6-3	-	R/W	Reserved
2-0	0x7	R/W	**Unknown Packet Default Port(s)** Specify which ports to send packets with unknown destination addresses. Feature is enabled by bit [7]. Bit 2 for the host port, bit 1 for port 2, and bit 0 for port 1

Banks 34 – 38: Reserved

Except Bank Select Register (0xE)

Bank 39 MAC Address Register 1 (0x00): MACAR1

This register contains the MAC address for the switch function. This MAC address is used for sending PAUSE frame.

Bit	Default	R/W	Description
15-0	0x0010	RW	**MACA[47:32]** Specifies MAC address 1. This value has to be same as MARH in Bank2.

Bank 39 MAC Address Register 2 (0x02): MACAR2

This register contains the MAC address for the switch function. This MAC address is used for sending PAUSE frame.

Bit	Default	R/W	Description
15-0	0xA1FF	RW	**MACA[31:16]** Specifies MAC address 2. This value has to be same as MARM in Bank2.

Bank 39 MAC Address Register 3 (0x04): MACAR3

This register contains the MAC address for the switch function. This MAC address is used for sending PAUSE frame.

Bit	Default	R/W	Description
15-0	0xFFFF	RW	**MACA[15:0]** Specifies MAC address 3. This value has to be same as MARL in Bank2.

Bank 40 TOS Priority Control Register 1 (0x00): TOSR1

The Ipv4/Ipv6 ToS priority control registers implement a fully decoded,128-bit DSCP (Differentiated Services Code Point) register used to determine priority from the 6-bit ToS (Type of Service) field in the IP header. The most significant 6 bits of the ToS field are fully decoded into 64 possibilities, and the singular code that results is compared against the corresponding bits in the DSCP register to determine the priority.

This register contains the ToS priority control for the switch function.

Bit	Default	R/W	Description
15-14	0	RW	**DSCP[15:14]** The value in this field is used as the frame's priority when bits [7:2] of it IP TOS/DiffServ/Traffic Class value is 0x1c.
13-12	0	R/W	**DSCP[13:12]** The value in this field is used as the frame's priority when bits [7:2] of it IP TOS/DiffServ/Traffic Class value is 0x18.
11-10	0	R/W	**DSCP[11:10]** The value in this field is used as the frame's priority when bits [7:2] of it IP TOS/DiffServ/Traffic Class value is 0x14.
9-8	0	R/W	**DSCP[9:8]** The value in this field is used as the frame's priority when bits [7:2] of it IP TOS/DiffServ/Traffic Class value is 0x10.
7-6	0	R/W	**DSCP[7:6]** The value in this field is used as the frame's priority when bits [7:2] of it IP TOS/DiffServ/Traffic Class value is 0x0c.
5-4	0	R/W	**DSCP[5:4]** The value in this field is used as the frame's priority when bits [7:2] of it IP TOS/DiffServ/Traffic Class value is 0x08.
3-2	0	R/W	**DSCP[3:2]** The value in this field is used as the frame's priority when bits [7:2] of it IP TOS/DiffServ/Traffic Class value is 0x04.
1-0	0	R/W	**DSCP[1:0]** The value in this field is used as the frame's priority when bits [7:2] of it IP TOS/DiffServ/Traffic Class value is 0x00.

Bank 40 TOS Priority Control Register 2 (0x02): TOSR2

This register contains the TOS priority control for the switch function.

Bit	Default	R/W	Description
15-14	0	RW	**DSCP[31:30]** The value in this field is used as the frame's priority when bits [7:2] of it IP TOS/DiffServ/Traffic Class value is 0x3c.
13-12	0	R/W	**DSCP[29:28]** The value in this field is used as the frame's priority when bits [7:2] of it IP TOS/DiffServ/Traffic Class value is 0x38.
11-10	0	R/W	**DSCP[27:26]** The value in this field is used as the frame's priority when bits [7:2] of it IP TOS/DiffServ/Traffic Class value is 0x34.
9-8	0	R/W	**DSCP[25:24]** The value in this field is used as the frame's priority when bits [7:2] of it IP TOS/DiffServ/Traffic Class value is 0x30.
7-6	0	R/W	**DSCP[23:22]** The value in this field is used as the frame's priority when bits [7:2] of it IP TOS/DiffServ/Traffic Class value is 0x2c.
5-4	0	R/W	**DSCP[21:20]** The value in this field is used as the frame's priority when bits [7:2] of it IP TOS/DiffServ/Traffic Class value is 0x28.
3-2	0	R/W	**DSCP[19:18]** The value in this field is used as the frame's priority when bits [7:2] of it IP TOS/DiffServ/Traffic Class value is 0x24.
1-0	0	R/W	**DSCP[17:16]** The value in this field is used as the frame's priority when bits [7:2] of it IP TOS/DiffServ/Traffic Class value is 0x20.

Bank 40 TOS Priority Control Register 3 (0x04): TOSR3

This register contains the TOS priority control for the switch function.

Bit	Default	R/W	Description
15-14	0	RW	**DSCP[47:46]** The value in this field is used as the frame's priority when bits [7:2] of it IP TOS/DiffServ/Traffic Class value is 0x5c.
13-12	0	R/W	**DSCP[45:44]** The value in this field is used as the frame's priority when bits [7:2] of it IP TOS/DiffServ/Traffic Class value is 0x58.
11-10	0	R/W	**DSCP[43:42]** The value in this field is used as the frame's priority when bits [7:2] of it IP TOS/DiffServ/Traffic Class value is 0x54.
9-8	0	R/W	**DSCP[41:40]** The value in this field is used as the frame's priority when bits [7:2] of it IP TOS/DiffServ/Traffic Class value is 0x50.
7-6	0	R/W	**DSCP[39:38]** The value in this field is used as the frame's priority when bits [7:2] of it IP TOS/DiffServ/Traffic Class value is 0x4c.
5-4	0	R/W	**DSCP[37:36]** The value in this field is used as the frame's priority when bits [7:2] of it IP TOS/DiffServ/Traffic Class value is 0x48.
3-2	0	R/W	**DSCP[35:34]** The value in this field is used as the frame's priority when bits [7:2] of it IP TOS/DiffServ/Traffic Class value is 0x44.
1-0	0	R/W	**DSCP[33:32]** The value in this field is used as the frame's priority when bits [7:2] of it IP TOS/DiffServ/Traffic Class value is 0x40.

Bank 40 TOS Priority Control Register 4 (0x06): TOSR4

This register contains the TOS priority control for the switch function.

Bit	Default	R/W	Description
15-14	0	RW	**DSCP[63:62]** The value in this field is used as the frame's priority when bits [7:2] of it IP TOS/DiffServ/Traffic Class value is 0x7c.
13-12	0	R/W	**DSCP[61:60]** The value in this field is used as the frame's priority when bits [7:2] of it IP TOS/DiffServ/Traffic Class value is 0x78.
11-10	0	R/W	**DSCP[59:58]** The value in this field is used as the frame's priority when bits [7:2] of it IP TOS/DiffServ/Traffic Class value is 0x74.
9-8	0	R/W	**DSCP[57:56]** The value in this field is used as the frame's priority when bits [7:2] of it IP TOS/DiffServ/Traffic Class value is 0x70.
7-6	0	R/W	**DSCP[55:54]** The value in this field is used as the frame's priority when bits [7:2] of it IP TOS/DiffServ/Traffic Class value is 0x6c.
5-4	0	R/W	**DSCP[53:52]** The value in this field is used as the frame's priority when bits [7:2] of it IP TOS/DiffServ/Traffic Class value is 0x68.
3-2	0	R/W	**DSCP[51:50]** The value in this field is used as the frame's priority when bits [7:2] of it IP TOS/DiffServ/Traffic Class value is 0x64.
1-0	0	R/W	**DSCP[49:48]** The value in this field is used as the frame's priority when bits [7:2] of it IP TOS/DiffServ/Traffic Class value is 0x60.

Bank 40 TOS Priority Control Register 5 (0x08): TOSR5

This register contains the TOS priority control for the switch function.

Bit	Default	R/W	Description
15-14	0	RW	**DSCP[79:78]** The value in this field is used as the frame's priority when bits [7:2] of it IP TOS/DiffServ/Traffic Class value is 0x9c.
13-12	0	R/W	**DSCP[77:76]** The value in this field is used as the frame's priority when bits [7:2] of it IP TOS/DiffServ/Traffic Class value is 0x98.
11-10	0	R/W	**DSCP[75:74]** The value in this field is used as the frame's priority when bits [7:2] of it IP TOS/DiffServ/Traffic Class value is 0x94.
9-8	0	R/W	**DSCP[73:72]** The value in this field is used as the frame's priority when bits [7:2] of it IP TOS/DiffServ/Traffic Class value is 0x90.
7-6	0	R/W	**DSCP[71:70]** The value in this field is used as the frame's priority when bits [7:2] of it IP TOS/DiffServ/Traffic Class value is 0x8c.
5-4	0	R/W	**DSCP[69:68]** The value in this field is used as the frame's priority when bits [7:2] of it IP TOS/DiffServ/Traffic Class value is 0x88.
3-2	0	R/W	**DSCP[67:66]** The value in this field is used as the frame's priority when bits [7:2] of it IP TOS/DiffServ/Traffic Class value is 0x84.
1-0	0	R/W	**DSCP[65:64]** The value in this field is used as the frame's priority when bits [7:2] of it IP TOS/DiffServ/Traffic Class value is 0x80.

Bank 40 TOS Priority Control Register 6 (0x0A): TOSR6

This register contains the TOS priority control for the switch function.

Bit	Default	R/W	Description
15-14	0	RW	**DSCP[95:94]** The value in this field is used as the frame's priority when bits [7:2] of it IP TOS/DiffServ/Traffic Class value is 0xbc.
13-12	0	R/W	**DSCP[93:92]** The value in this field is used as the frame's priority when bits [7:2] of it IP TOS/DiffServ/Traffic Class value is 0xb8.
11-10	0	R/W	**DSCP[91:90]** The value in this field is used as the frame's priority when bits [7:2] of it IP TOS/DiffServ/Traffic Class value is 0xb4.
9-8	0	R/W	**DSCP[89:88]** The value in this field is used as the frame's priority when bits [7:2] of it IP TOS/DiffServ/Traffic Class value is 0xb0.
7-6	0	R/W	**DSCP[87:86]** The value in this field is used as the frame's priority when bits [7:2] of it IP TOS/DiffServ/Traffic Class value is 0xac.
5-4	0	R/W	**DSCP[85:84]** The value in this field is used as the frame's priority when bits [7:2] of it IP TOS/DiffServ/Traffic Class value is 0xa8.
3-2	0	R/W	**DSCP[83:82]** The value in this field is used as the frame's priority when bits [7:2] of it IP TOS/DiffServ/Traffic Class value is 0xa4.
1-0	0	R/W	**DSCP[81:80]** The value in this field is used as the frame's priority when bits [7:2] of it IP TOS/DiffServ/Traffic Class value is 0xa0.

Bank 41 TOS Priority Control Register 7 (0x00): TOSR7

This register contains the TOS priority control for the switch function.

Bit	Default	R/W	Description
15-14	0	RW	**DSCP[111:110]** The value in this field is used as the frame's priority when bits [7:2] of it IP TOS/DiffServ/Traffic Class value is 0xdc.
13-12	0	R/W	**DSCP[109:108]** The value in this field is used as the frame's priority when bits [7:2] of it IP TOS/DiffServ/Traffic Class value is 0xd8.
11-10	0	R/W	**DSCP[107:106]** The value in this field is used as the frame's priority when bits [7:2] of it IP TOS/DiffServ/Traffic Class value is 0xd4.
9-8	0	R/W	**DSCP[105:104]** The value in this field is used as the frame's priority when bits [7:2] of it IP TOS/DiffServ/Traffic Class value is 0xd0.
7-6	0	R/W	**DSCP[103:102]** The value in this field is used as the frame's priority when bits [7:2] of it IP TOS/DiffServ/Traffic Class value is 0xcc.
5-4	0	R/W	**DSCP[101:100]** The value in this field is used as the frame's priority when bits [7:2] of it IP TOS/DiffServ/Traffic Class value is 0xc8.
3-2	0	R/W	**DSCP[99:98]** The value in this field is used as the frame's priority when bits [7:2] of it IP TOS/DiffServ/Traffic Class value is 0xc4.
1-0	0	R/W	**DSCP[97:96]** The value in this field is used as the frame's priority when bits [7:2] of it IP TOS/DiffServ/Traffic Class value is 0xc0.

Bank 41 TOS Priority Control Register 8 (0x02): TOSR8

This register contains the TOS priority control for the switch function.

Bit	Default	R/W	Description
15-14	0	RW	**DSCP[127:126]** The value in this field is used as the frame's priority when bits [7:2] of it IP TOS/DiffServ/Traffic Class value is 0xfc
13-12	0	R/W	**DSCP[125:124]** The value in this field is used as the frame's priority when bits [7:2] of it IP TOS/DiffServ/Traffic Class value is 0xf8.
11-10	0	R/W	**DSCP[123:122]** The value in this field is used as the frame's priority when bits [7:2] of it IP TOS/DiffServ/Traffic Class value is 0xf4.
9-8	0	R/W	**DSCP[121:120]** The value in this field is used as the frame's priority when bits [7:2] of it IP TOS/DiffServ/Traffic Class value is 0xf0.
7-6	0	R/W	**DSCP[119:118]** The value in this field is used as the frame's priority when bits [7:2] of it IP TOS/DiffServ/Traffic Class value is 0xec.
5-4	0	R/W	**DSCP[117:116]** The value in this field is used as the frame's priority when bits [7:2] of it IP TOS/DiffServ/Traffic Class value is 0xe8.
3-2	0	R/W	**DSCP[115:114]** The value in this field is used as the frame's priority when bits [7:2] of it IP TOS/DiffServ/Traffic Class value is 0xe4.
1-0	0	R/W	**DSCP[113:112]** The value in this field is used as the frame's priority when bits [7:2] of it IP TOS/DiffServ/Traffic Class value is 0xe0.

Bank 42 Indirect Access Control Register (0x00): IACR

This register contains the indirect control for the switch function.

Bit	Default	R/W	Description
15-13	0x0	RW	Reserved
12	0	RW	**Read High. Write Low** 1 = read cycle. 0 = write cycle.
11-10	0x0	RW	**Table Select** 00 = static MAC address table selected. 01 = VLAN table selected. 10 = dynamic address table selected. 11 = MIB counter selected.
9-0	0x000	RW	**Indirect Address** Bit 9-0 of indirect address.

Note: Write IACR triggers a command. Read or write access is determined by Register bit 12.

Bank 42 Indirect Access Data Register 1 (0x02): IADR1

This register contains the indirect data for the switch function.

Bit	Default	R/W	Description
15-8	0x00	RO	Reserved
7	0	RO	**CPU Read Status** Only for dynamic and statistics counter reads. 1 = read is still in progress. 0 = read has completed.

6-3	0x0	RO	Reserved
2-0	0x0	RO	**Indirect Data** Bit 66-64 of indirect data.

Bank 42 Indirect Access Data Register 2 (0x04): IADR2

This register contains the indirect data for the switch function.

Bit	Default	R/W	Description
15-0	0x0000	RW	**Indirect Data** Bit 47-32 of indirect data.

Bank 42 Indirect Access Data Register 3 (0x06): IADR3

This register contains the indirect data for the switch function.

Bit	Default	R/W	Description
15-0	0x0000	RW	**Indirect Data** Bit 63-48 of indirect data.

Bank 42 Indirect Access Data Register 4 (0x08): IADR4

This register contains the indirect data for the switch function.

Bit	Default	R/W	Description
15-0	0x0000	RW	**Indirect Data** Bit 15-0 of indirect data.

Bank 42 Indirect Access Data Register 5 (0x0A): IADR5

This register contains the indirect data for the switch function.

Bit	Default	R/W	Description
15-0	0x0000	RW	**Indirect Data** Bit 31-16 of indirect data.

Bank 43: Reserved

Except Bank Select Register (0xE)

Bank 44 Digital Testing Status Register (0x00): DTSR

This register contains the user defined register for the switch function.

Bit	Default	R/W	Description
15-3	0x0000	RO	Reserved
2-0	0x0	RO	Reserved

Bank 44 Analog Testing Status Register (0x02): ATSR

This register contains the user defined register for the switch function.

Bit	Default	R/W	Description
15-8	0x00	RO	Reserved
7-0	0x00	RO	Reserved

Bank 44 Digital Testing Control Register (0x04): DTCR

This register contains the user defined register for the switch function.

Bit	Default	R/W	Description
15-8	0x00	RO	Reserved
7-0	0x3F	RW	Reserved

Bank 44 Analog Testing Control Register 0 (0x06): ATCR0

This register contains the user defined register for the switch function.

Bit	Default	R/W	Description
15-8	0x00	RO	Reserved
7-0	0x00	RW	Reserved

Bank 44 Analog Testing Control Register 1 (0x08): ATCR1

This register contains the user defined register for the switch function.

Bit	Default	R/W	Description
15-0	0x0000	RW	Reserved

Bank 44 Analog Testing Control Register 2 (0x0A): ATCR2

This register contains the user defined register for the switch function.

Bit	Default	R/W	Description
15-0	0x0000	RW	Reserved

Bank 45 PHY 1 MII-Register Basic Control Register (0x00): P1MBCR

This register contains Media Independent Interface (MII) register for switch port 1 as defined in the IEEE 802.3 specification.

Bit	Default	R/W	Description	Bit is same as:
15	0	RO	**Soft reset** Not supported.	
14	0	RW	**Far-End Loopback** 1 = perform loopback as follows: Start: RXP2/RXM2 (port 2) Loop back: PMD/PMA of port 1's PHY End: TXP2/TXM2 (port 2) 0 = normal operation.	Bank 49 0x02 bit 8
13	0	RW	**Force 100** 1 = force 100Mbps if AN is disabled (bit 12) 0 = force 10Mbps if AN is disabled (bit 12)	Bank 49 0x02 bit 6
12	1	RW	**AN Enable** 1 = auto-negotiation enabled. 0 = auto-negotiation disabled.	Bank 49 0x02 bit 7
11	0	RW	**Power-Down** 1 = power-down. 0 = normal operation.	Bank 49 0x02 bit 11
10	0	RO	**Isolate** Not supported.	
9	0	RW	**Restart AN** 1 = restart auto-negotiation. 0 = normal operation.	Bank 49 0x02 bit 13

Bit	Default	R/W	Description	Bit is same as:
8	0	RW	**Force Full Duplex** 1 = force full duplex. 0 = force half duplex. if AN is disabled (bit 12) or AN is enabled but failed.	Bank 49 0x02 bit 5
7	0	RO	**Collision test** Not supported.	
6	0	RO	Reserved.	
5	1	R/W	**HP_mdix** 1 = HP Auto MDI-X mode. 0 = Micrel Auto MDI-X mode.	Bank 49 0x04 bit 15
4	0	RW	**Force MDI-X** 1 = force MDI-X. 0 = normal operation.	Bank 49 0x02 bit 9
3	0	RW	**Disable MDI-X** 1 = disable auto MDI-X. 0 = normal operation.	Bank 49 0x02 bit 10
2	0	RW	**Disable Far-End-Fault** 1 = disable far-end-fault detection. 0 = normal operation.	Bank 49 0x02 bit 12
1	0	RW	**Disable Transmit** 1 = disable transmit. 0 = normal operation.	Bank 49 0x02 bit 14
0	0	RW	**Disable LED** 1 = disable LED. 0 = normal operation.	Bank 49 0x02 bit 15

Bank 45 PHY 1 MII-Register Basic Status Register (0x02): P1MBSR

This register contains the MII register status for the switch port 1 function.

Bit	Default	R/W	Description	Bit is same as:
15	0	RO	**T4 Capable** 1 = 100 BASE-T4 capable. 0 = not 100 BASE-T4 capable.	
14	1	RO	**100 Full Capable** 1 = 100BASE-TX full-duplex capable. 0 = not 100BASE-TX full duplex capable.	
13	1	RO	**100 Half Capable** 1 = 100BASE-TX half-duplex capable. 0 = not 100BASE-TX half-duplex capable.	
12	1	RO	**10 Full Capable** 1 = 10BASE-T full-duplex capable. 0 = not 10BASE-T full-duplex capable.	
11	1	RO	**10 Half Capable** 1 = 10BASE-T half-duplex capable. 0 = not 10BASE-T half-duplex capable.	
10-7	0x0	RO	Reserved	
6	0	RO	**Preamble Suppressed** Not supported.	
5	0	RO	**AN Complete** 1 = auto-negotiation complete.	Bank 49 0x04 bit 6

Bit	Default	R/W	Description	Bit is same as:
			0 = auto-negotiation not completed.	
4	0	RO	**Far-End-Fault** 1 = far-end-fault detected. 0 = no far-end-fault detected.	Bank 49 0x04 bit 8
3	1	RO	**AN Capable** 1 = auto-negotiation capable. 0 = not auto-negotiation capable.	
2	0	RO	**Link Status** 1 = link is up. 0 = link is down.	Bank49 0x04 bit 5
1	0	RO	**Jabber test** Not supported.	
0	0	RO	**Extended Capable** 1 = extended register capable. 0 = not extended register capable.	

Bank 45 PHY 1 PHYID Low Register (0x04): PHY1ILR

This register contains the PHY ID (low) for the switch port 1 function.

Bit	Default	R/W	Description
15-0	0x1430	RO	**PHYID Low** Low order PHYID bits.

Bank 45 PHY 1 PHYID High Register (0x06): PHY1IHR

This register contains the PHY ID (high) for the switch port 1 function.

Bit	Default	R/W	Description
15-0	0x0022	RO	**PHYID High** High order PHYID bits.

Bank 45 PHY 1 Auto-Negotiation Advertisement Register (0x08): P1ANAR

This register contains the auto-negotiation advertisement for the switch port 1 function.

Bit	Default	R/W	Description	Bit is same as:
15	0	RO	**Next page** Not supported.	
14	0	RO	Reserved	
13	0	RO	**Remote fault** Not supported.	
12-11	0x0	RO	Reserved	
10	1	RW	**Pause (flow control capability)** 1 = advertise pause ability. 0 = do not advertise pause capability.	Bank 49 0x02 bit 4
9	0	RW	Reserved	
8	1	RW	**Adv 100 Full** 1 = advertise 100 full-duplex capable. 0 = do not advertise 100 full-duplex capability.	Bank49 0x02 bit 3
7	1	RW	**Adv 100 Half** 1= advertise 100 half-duplex capable. 0 = do not advertise 100 half-duplex capability.	Bank49 0x02 bit 2

6	1	RW	**Adv 10 Full** 1 = advertise 10 full-duplex capable. 0 = do not advertise 10 full-duplex capability.	Bank49 0x02 bit 1
5	1	RW	**Adv 10 Half** 1 = advertise 10 half-duplex capable. 0 = do not advertise 10 half-duplex capability.	Bank49 0x02 bit 0
4-0	0x01	RO	**Selector Field** 802.3	

Bank 45 PHY 1 Auto-Negotiation Link Partner Ability Register (0x0A): P1ANLPR

This register contains the auto-negotiation link partner ability for the switch port 1 function.

Bit	Default	R/W	Description	Bit is same as:
15	0	RO	**Next page** Not supported.	
14	0	RO	**LP ACK** Not supported.	
13	0	RO	**Remote fault** Not supported.	
12-11	0x0	RO	Reserved	
10	0	RO	**Pause** Link partner pause capability.	Bank 49 0x04 bit 4
9	0	RO	Reserved	
8	0	RO	**Adv 100 Full** Link partner 100 full capability.	Bank 49 0x04 bit 3
7	0	RO	**Adv 100 Half** Link partner 100 half capability.	Bank 49 0x04 bit 2
6	0	RO	**Adv 10 Full** Link partner 10 full capability.	Bank 49 0x04 bit 1
5	0	RO	**Adv 10 Half** Link partner 10 half capability.	Bank 49 0x04 bit 0
4-0	0x01	RO	Reserved	

Bank 46 PHY 2 MII-Register Basic Control Register (0x00): P2MBCR

This register contains Media Independent Interface (MII) control for the switch function as defined in the IEEE 802.3 specification.

Bit	Default	R/W	Description	Bit is same as:
15	0	RO	**Soft reset** Not supported.	
14	0	RW	**Far-End Loopback** 1 = perform loop back, as indicated (see Figure14): Start: RXP1/RXM1 (port 1) Loop back: PMD/PMA of port 2's PHY End: TXP1/TXM1 (port 1) 0 = normal operation.	Bank 51 0x02 bit 8
13	0	RW	**Force 100**	Bank 51 0x02 bit 6

Bit	Default	R/W	Description	Bit is same as:
			1 = 100 Mbps. 0 = 10 Mbps.	
12	1	RW	**AN Enable** 1 = auto-negotiation enabled. 0 = auto-negotiation disabled.	Bank 51 0x02 bit 7
11	0	RW	**Power Down** 1 = power down. 0 = normal operation.	Bank 51 0x02 bit 11
10	0	RO	**Isolate** Not supported.	
9	0	RW	**Restart AN** 1 = restart auto-negotiation. 0 = normal operation,	Bank 51 0x02 bit 13
8	0	RW	**Force Full Duplex** 1 = full duplex. 0 = half duplex.	Bank 51 0x02 bit 5
7	0	RO	**Collision test** Not supported.	
6	0	RO	Reserved	
5	1	R/W	**HP_mdix** 1 = HP Auto MDI-X mode. 0 = Micrel Auto MDI-X mode.	Bank 51 0x04 bit 15
4	0	RW	**Force MDI-X** 1 = force MDI-X. 0 = normal operation.	Bank 51 0x02 bit 9
3	0	RW	**Disable MDI-X** 1 = disable auto MDI-X. 0 = normal operation.	Bank 51 0x02 bit 10
2	0	RW	**Disable Far-End-Fault** 1 = disable far-end-fault detection. 0 = normal operation.	Bank 51 0x02 bit 12
1	0	RW	**Disable Transmit** 1 = disable transmit. 0 = normal operation.	Bank 51 0x02 bit 14
0	0	RW	**Disable LED** 1 = disable LED. 0 = normal operation.	Bank 51 0x02 bit 15

Bank 46 PHY 2 MII-Register Basic Status Register (0x02): P2MBSR

This register contains the MII register for the switch port 2 function.

Bit	Default	R/W	Description	Bit is same as:
15	0	RO	**T4 Capable** 0 = not 100 BASE-T4 capable.	
14	1	RO	**100 Full Capable**	

			1 = 100BASE-TX full-duplex capable. 0 = not 100BASE-TX full-duplex capable.	
13	1	RO	**100 Half Capable** 1 = 100BASE-TX half-duplex capable. 0 = not 100BASE-TX half-duplex capable.	
12	1	RO	**10 Full Capable** 1 = 10BASE-T full-duplex capable. 0 = not 10BASE-T full-duplex capable.	
11	1	RO	**10 Half Capable** 1 = 10BASE-T half-duplex capable. 0 = not 10BASE-T half-duplex capable.	
10-7	0x0	RO	Reserved	
6	0	RO	**Preamble suppressed** Not supported.	
5	0	RO	**AN Complete** 1 = auto-negotiation complete. 0 = auto-negotiation not complete.	Bank 51 0x04 bit 6
4	0	RO	**Far-End-Fault** 1 = far-end-fault detected. 0 = no far-end-fault detected.	Bank 51 0x04 bit 8
3	1	RO	**AN Capable** 1 = auto-negotiation capable. 0 = not auto-negotiation capable.	
2	0	RO	**Link Status** 1 = link is up. 0 = link is down.	Bank 51 0x04 bit 5
1	0	RO	**Jabber test** Not supported.	
0	0	RO	**Extended Capable** 0 = not extended register capable.	

Bank 46 PHY 2 PHYID Low Register (0x04): PHY2ILR

This register contains the PHY ID (low) for the switch port 2 function.

Bit	Default	R/W	Description
15-0	0x1430	RO	**PHYID Low** Low order PHYID bits.

Bank 46 PHY 2 PHYID High Register (0x06): PHY2IHR

This register contains the PHY ID (high) for the switch port 2 function.

Bit	Default	R/W	Description
15-0	0x0022	RO	**PHYID High** High order PHYID bits.

Bank 46 PHY 2 Auto-Negotiation Advertisement Register (0x08): P2ANAR

This register contains the auto-negotiation advertisement for the switch port 2 function.

Bit	Default	R/W	Description	Bit is same as:
15	0	RO	**Next page** Not supported.	
14	0	RO	Reserved	
13	0	RO	**Remote fault** Not supported.	
12-11	0x0	RO	Reserved	
10	1	RW	**Pause** 1 = advertise pause capability. 0 = do not advertise pause capability.	Bank 51 0x02 bit 4
9	0	RW	Reserved	
8	1	RW	**Adv 100 Full** 1 = advertise 100 full-duplex capability. 0 = do not advertise 100 full-duplex capability.	Bank 51 0x02 bit 3
7	1	RW	**Adv 100 Half** 1 = advertise 100 half-duplex capability. 0 = do not advertise 100 half-duplex capability.	Bank 51 0x02 bit 2
6	1	RW	**Adv 10 Full** 1 = advertise 10 full-duplex capability. 0 = do not advertise 10 full-duplex capability.	Bank 51 0x02 bit 1
5	1	RW	**Adv 10 Half** 1= advertise 10 half-duplex capability. 0 = do not advertise 10 half-duplex capability.	Bank 51 0x02 bit 0
4-0	0x01	RO	**Selector Field** 802.3	

Bank 46 PHY 2 Auto-Negotiation Link Partner Ability Register (0x0A): P2ANLPR

This register contains the auto-negotiation link partner ability for the switch port 2 function.

Bit	Default	R/W	Description	Bit is same as:
15	0	RO	**Next page** Not supported.	
14	0	RO	**LP ACK** Not supported.	
13	0	RO	**Remote fault** Not supported.	
12-11	0x0	RO	Reserved	
10	0	RO	**Pause** Link partner pause capability.	Bank 51 0x04 bit 4
9	0	RO	Reserved	
8	0	RO	**Adv 100 Full**	Bank 51 0x04 bit 3

			Link partner 100 full capability.	
7	0	RO	**Adv 100 Half** Link partner 100 half capability.	Bank 51 0x04 bit 2
6	0	RO	**Adv 10 Full** Link partner 10 full capability.	Bank 51 0x04 bit 1
5	0	RO	**Adv 10 Half** Link partner 10 half capability.	Bank 51 0x04 bit 0
4-0	0x01	RO	Reserved	

Bank 47 PHY1 LinkMD Control/Status (0x00): P1VCT

This register contains the LinkMD control and status information of PHY 1.

Bit	Default	R/W	Description	Bit is same as:
15	0	RW (Self-Clear)	**Vct_enable** 1 = cable diagnostic test is enabled. It is self-cleared after the VCT test is done. 0 = indicates that the cable diagnostic test is completed and the status information is valid for read.	Bank 49 0x00 bit 12
14-13	0x0	RO	**Vct_result** [00] = normal condition. [01] = open condition detected in the cable. [10] = short condition detected in the cable. [11] = cable diagnostic test failed.	Bank 49 0x00 bit 14-13
12	-	RO	**Vct 10M Short** 1 = Less than 10m short.	Bank 49 0x00 bit 15
11-9	0x0	RO	Reserved	
8-0	0x000	RO	**Vct_fault_count** Distance to the fault. The distance is approximately 0.4m*vct_fault_count.	Bank 49 0x00 bit 8-0

Bank 47 PHY1 Special Control/Status Register (0x02): P1PHYCTRL

This register contains the control and status information of PHY1.

Bit	Default	R/W	Description	Bit is same as:
15-6	0x000	RO	Reserved	
5	0	RO	**Polarity Reverse (polrvs)** 1 = polarity is reversed. 0 = polarity is not reversed.	Bank 49 0x04 bit 13
4	0	RO	**MDI-X Status (mdix_st)** 1 = MDI 0 = MDI-X	Bank 49 0x04 bit 7
3	0	RW	**Force Link (force_lnk)** 1 = force link pass. 0 = normal operation.	Bank 49 0x00 bit 11
2	1	RW	**Power Saving (pwrsave)** 1 = disable power saving. 0 = enable power saving.	Bank 49 0x00 bit 10

1	0	RW	**Remote (Near-End) Loopback (rlb)** 1 = perform remote loopback at Port 1's PHY (RXP1/RXM1 -> TXP1/TXM1, see Figure 15) 0 = normal operation	Bank 49 0x00 bit 9
0	0	RW	Reserved	

Bank 47 PHY2 LinkMD Control/Status (0x04): P2VCT

This register contains the LinkMD control and status information of PHY 2.

Bit	Default	R/W	Description	Bit is same as:
15	0 (Self-Clear)	RW	**Vct_enable** 1 = the cable diagnostic test is enabled. It is self-cleared after the VCT test is done. 0 = it indicates the cable diagnostic test is completed and the status information is valid for read.	Bank 51 0x00 bit 12
14-13	0x0	RO	**Vct_result** [00] = normal condition. [01] = open condition detected in the cable. [10] = short condition detected in the cable. [11] = cable diagnostic test failed.	Bank 51 0x00 bit 14-13
12	-	RO	**Vct 10M Short** 1 = Less than 10m short.	Bank 51 0x00 bit 15
11-9	0x0	RO	Reserved	
8-0	0x000	RO	**Vct_fault_count** Distance to the fault. The distance is approximately 0.4m*vct_fault_count.	Bank 51 0x00 bit 8-0

Bank 47 PHY2 Special Control/Status Register (0x06): P2PHYCTRL

This register contains the control and status information of PHY2.

Bit	Default	R/W	Description	Bit is same as:
15-6	0x000	RO	Reserved	
5	0	RO	**Polarity reverse (polrvs)** 1 = polarity is reversed. 0 = polarity is not reversed.	Bank 51 0x04 bit 13
4	0	RO	**MDIX Status (mdix_st)** 1 = MDI 0 = MDI-X	Bank 51 0x04 bit 7
3	0	RW	**Force Link (force_lnk)** 1 = force link pass. 0 = normal operation.	Bank 51 0x00 bit 11
2	1	RW	**Power Saving** (pwrsave) 1 = disable power saving. 0 = enable power saving.	Bank 51 0x00 bit 10
1	0	RW	**Remote (Near-End) Loopback (rlb)** 1 = perform remote loopback at Port 2's PHY(RXP2/RXM2 -> TXP2/TXM2. see	Bank 51 0x00 bit 9

			Figure 15) 0 = normal operation	
0	0	RW	Reserved	

Bank 48 Port 1 Control Register 1 (0x00): P1CR1

This register contains the global per port control for the switch function.

Bit	Default	R/W	Description
15-8	0x00	RO	Reserved
7	0	RW	**Broadcast Storm Protection Enable** 1 = enable broadcast storm protection for ingress packets on the port. 0 = disable broadcast storm protection.
6	0	RW	**Diffserv Priority Classification Enable** 1= enable DiffServ priority classification for ingress packets on the port. 0 = disable DiffServ function.
5	0	RW	**802.1p Priority Classification Enable** 1= enable 802.1p priority classification for ingress packets on the port. 0 = disable 802.1p.
4-3	0x0	RW	**Port-Based Priority Classification** 00 - ingress packets on port are classified as priority 0 queue if “DiffServ” or “802.1p” classification is not enabled or fails to classify. 01 - ingress packets on port are classified as priority 1 queue if “DiffServ” or “802.1p” classification is not enabled or fails to classify. 10 - ingress packets on port are classified as priority 2 queue if “DiffServ” or “802.1p” classification is not enabled or fails to classify. 11 - ingress packets on port are classified as priority 3 queue if “Diffserv” or “802.1p” classification is not enabled or fails to classify. Note: “DiffServ”, “802.1p” and port priority can be enabled at the same time. The OR’ed result of 802.1p and DSCP overwrites the port priority.
2	0	RW	**Tag Insertion** 1 = when packets are output on the port, the switch adds 802.1p/q tags to packets without 802.1p/q tags when received. The switch will not add tags to packets already tagged. The tag inserted is the ingress port’s “port VID”. 0 = disable tag insertion.
1	0	RW	**Tag Removal** 1 = when packets are output on the port, the switch removes 802.1p/q tags from packets with 802.1p/q tags when received. The switch will not modify packets received without tags. 0 = disable tag removal.
0	0	RW	**TX Multiple Queues Select Enable** 1 = the port output queue is split into four priority queues. 0 = single output queue on the port. There is no priority differentiation even though packets are classified into high or low priority.

Bank 48 Port 1 Control Register 2 (0x02): P1CR2

This register contains the global per port control for the switch function.

Bit	Default	R/W	Description
15	0	RW	Reserved
14	0	RW	**Ingress VLAN Filtering** 1= the switch discards packets whose VID port membership in VLAN table bits [18:16] does not include the ingress port VID. 0 = no ingress VLAN filtering.
13	0	RW	**Discard Non PVID Packets** 1 = the switch discards packets whose VID does not match the ingress port default VID. 0 = no packets are discarded.
12	0	RW	**Force Flow Control** 1 = always enable flow control on the port, regardless of AN result. 0 = the flow control is enabled based on AN result.
11	0	RW	**Back Pressure Enable** 1 = enable port's half-duplex back pressure. 0 = disable port's half-duplex back pressure.
10	1	RW	**Transmit Enable** 1 = enable packet transmission on the port. 0 = disable packet transmission on the port.
9	1	RW	**Receive Enable** 1 = enable packet reception on the port. 0 = disable packet reception on the port.
8	0	RW	**Learning Disable** 1 = disable switch address learning capability. 0 = enable switch address learning.
7	0	RW	**Sniffer Port** 1 = port is designated as a sniffer port and transmits packets that are monitored. 0 = port is a normal port.
6	0	RW	**Receive Sniff** 1 = all packets received on the port are marked as "monitored packets" and forwarded to the designated "sniffer port." 0 = no receive monitoring.
5	0	RW	**Transmit Sniff** 1 = all packets transmitted on the port are marked as "monitored packets" and forwarded to the designated "sniffer port." 0 = no transmit monitoring.
4	0	RW	Reserved
3	0	RW	**User Priority Ceiling** 1 = if the packet's "priority field" is greater than the "user priority field" in the port VID control register bit[15:13], replace the packet's "priority field" with the "user priority field" in the port VID control register bit[15:13]. 0 = do no compare and replace the packet's "priority field."
2-0	0x7	RW	**Port VLAN Membership** Define the port's Port VLAN membership. Bit 2 stands for the host port, bit 1 for port 2, and bit 0 for port 1. The port can only communicate within the membership. A '1' includes a port in the membership; a '0' excludes a port from the membership.

Bank 48 Port 1 VID Control Register (0x04): P1VIDCR

This register contains the global per port control for the switch function.

Bit	Default	R/W	Description
15-13	0x0	RW	**Default Tag[15:13]** Port's default tag, containing "User Priority Field" bits.
12	0	RW	**Default Tag[12]** Port's default tag, containing CFI bit.
11-0	0x001	RW	**Default Tag[11:0]** Port's default tag, containing VID[11:0].

Note: This VID Control register serves two purposes:

1. Associated with the ingress untagged packets, and used for egress tagging.
2. Default VID for the ingress untagged or null-VID-tagged packets, and used for address lookup.

Bank 48 Port 1 Control Register 3 (0x06): P1CR3

Bit	Default	R/W	Description
15-5	0x000	RO	Reserved
4	0x0	RW	Reserved
3-2	0x0	RW	**Ingress Limit Mode** These bits determine what kinds of frames are limited and counted against Ingress limiting as follows: 00 = Limit and count all frames. 01 = Limit and count Broadcast, Multicast, and flooded unicast frames. 10 = Limit and count Broadcast and Multicast frames only. 11 = Limit and count Broadcast frames only.
1	0	RW	**Count IFG** Count IFG Bytes. 1= each frame's minimum inter frame gap. (IFG) bytes (12 per frame) are included in Ingress and Egress rate limiting calculations. 0= IFG bytes are not counted.
0	0	RW	**Count Preamble** Count preamble Bytes. 1 = each frame's preamble bytes (8 per frame) are included in Ingress and Egress rate limiting calculations. 0 = preamble bytes are not counted.

Bank 48 Port 1 Ingress Rate Control Register (0x08): P1IRCR

Bit	Default	R/W	Description
15-12	0x0	RW	**Ingress Pri3 Rate** Priority 3 frames will be discarded after the ingress rate selected as shown below is reached or exceeded. 0000 = Not limited (default) 0001 = 64Kbps 0010 = 128Kbps 0011 = 256Kbps 0100 = 512Kbps 0101 = 1Mbps 0110 = 2Mbps 0111 = 4Mbps 1000 = 8Mbps 1001 = 16Mbps 1010 = 32Mbps 1011 = 48Mbps 1100 = 64 Mbps 1101 = 72Mbps 1110 = 80Mbps 1111 = 88Mbps Note: For 10BT, rate settings above 10Mbps are set to the default value 0000 (not limited).
11-8	0x0	RW	**Ingress Pri2 Rate** Priority 2 frames will be discarded after the ingress rate selected as shown below is reached or exceeded. 0000 = Not limited (default) 0001 = 64Kbps 0010 = 128Kbps 0011 = 256Kbps 0100 = 512Kbps 0101 = 1Mbps 0110 = 2Mbps 0111 = 4Mbps 1000 = 8Mbps 1001 = 16Mbps 1010 = 32Mbps 1011 = 48Mbps 1100 = 64 Mbps 1101 = 72Mbps 1110 = 80Mbps 1111 = 88Mbps Note: For 10BT, rate settings above 10Mbps are set to the default value 0000 (not limited).

Bit	Default	R/W	Description
7-4	0x0	RW	**Ingress Pri1 Rate** Priority 1 frames will be discarded after the ingress rate selected as shown below is reached or exceeded. 0000 = Not limited (default) 0001 = 64Kbps 0010 = 128Kbps 0011 = 256Kbps 0100 = 512Kbps 0101 = 1Mbps 0110 = 2Mbps 0111 = 4Mbps 1000 = 8Mbps 1001 = 16Mbps 1010 = 32Mbps 1011 = 48Mbps 1100 = 64 Mbps 1101 = 72Mbps 1110 = 80Mbps 1111 = 88Mbps Note: For 10BT, rate settings above 10Mbps are set to the default value 0000 (not limited).
3-0	0x0	RW	**Ingress Pri0 Rate** Priority 0 frames will be discarded after the ingress rate selected as shown below is reached or exceeded. 0000 = Not limited (default) 0001 = 64Kbps 0010 = 128Kbps 0011 = 256Kbps 0100 = 512Kbps 0101 = 1Mbps 0110 = 2Mbps 0111 = 4Mbps 1000 = 8Mbps 1001 = 16Mbps 1010 = 32Mbps 1011 = 48Mbps 1100 = 64 Mbps 1101 = 72Mbps 1110 = 80Mbps 1111 = 88Mbps Note: For 10BT, rate settings above 10Mbps are set to the default value 0000 (not limited).

Bank 48 Port 1 Egress Rate Control Register (0x0A): P1ERCR

Bit	Default	R/W	Description
15-12	0x0	RW	**Egress Pri3 Rate** Egress data rate limit for priority 3 frames. Output traffic from this priority queue is shaped according to the egress rate selected below: 0000 = Not limited (default) 0001 = 64Kbps 0010 = 128Kbps 0011 = 256Kbps 0100 = 512Kbps 0101 = 1Mbps 0110 = 2Mbps 0111 = 4Mbps 1000 = 8Mbps 1001 = 16Mbps 1010 = 32Mbps 1011 = 48Mbps 1100 = 64 Mbps 1101 = 72Mbps 1110 = 80Mbps 1111 = 88Mbps Notes: For 10BT, rate settings above 10Mbps are set to the default value 0000 (not limited). When multiple queue select enable is off (only 1 queue per port), rate limiting applies only to priority 0 queue.
11-8	0x0	RW	**Egress Pri2 Rate** Egress data rate limit for priority 2 frames. Output traffic from this priority queue is shaped according to the egress rate selected below: 0000 = Not limited (default) 0001 = 64Kbps 0010 = 128Kbps 0011 = 256Kbps 0100 = 512Kbps 0101 = 1Mbps 0110 = 2Mbps 0111 = 4Mbps 1000 = 8Mbps 1001 = 16Mbps 1010 = 32Mbps 1011 = 48Mbps 1100 = 64 Mbps 1101 = 72Mbps 1110 = 80Mbps 1111 = 88Mbps Notes: For 10BT, rate settings above 10Mbps are set to the default value 0000 (not limited). When multiple queue select enable is off (only 1 queue per port), rate limiting applies only to priority 0 queue.

Bit	Default	R/W	Description
7-4	0x0	RW	**Egress Pri1 Rate** Egress data rate limit for priority 1 frames. Output traffic from this priority queue is shaped according to the egress rate selected below: 0000 = Not limited (default) 0001 = 64Kbps 0010 = 128Kbps 0011 = 256Kbps 0100 = 512Kbps 0101 = 1Mbps 0110 = 2Mbps 0111 = 4Mbps 1000 = 8Mbps 1001 = 16Mbps 1010 = 32Mbps 1011 = 48Mbps 1100 = 64 Mbps 1101 = 72Mbps 1110 = 80Mbps 1111 = 88Mbps Notes: For 10BT, rate settings above 10Mbps are set to the default value 0000 (not limited). When multiple queue select enable is off (only 1 queue per port), rate limiting applies only to priority 0 queue.
3-0	0x0	RW	**Egress Pri0 Rate** Egress data rate limit for priority 0 frames. Output traffic from this priority queue is shaped according to the egress rate selected below: 0000 = Not limited (default) 0001 = 64Kbps 0010 = 128Kbps 0011 = 256Kbps 0100 = 512Kbps 0101 = 1Mbps 0110 = 2Mbps 0111 = 4Mbps 1000 = 8Mbps 1001 = 16Mbps 1010 = 32Mbps 1011 = 48Mbps 1100 = 64 Mbps 1101 = 72Mbps 1110 = 80Mbps 1111 = 88Mbps Notes: For 10BT, rate settings above 10Mbps are set to the default value 0000 (not limited). When multiple queue select enable is off (only 1 queue per port), rate limiting applies only to priority 0 queue.

Bank 49 Port 1 PHY Special Control/Status, LinkMD (0x00): P1SCSLMD

Bit	Default	R/W	Description	Bit is same as:
15	0	RO	**Vct_10m_short** 1 = Less than 10 meter short.	Bank 47 0x00 bit 12
14-13	0x0	RO	**Vct_result** VCT result. [00] = normal condition. [01] = open condition has been detected in cable. [10] = short condition has been detected in cable. [11] = cable diagnostic test is failed.	Bank 47 0x00 bit 14-13
12	0	RW SC	**Vct_en** Vct enable. 1 = the cable diagnostic test is enabled. It is self-cleared after the VCT test is done. 0 = it indicates the cable diagnostic test is completed and the status information is valid for read.	Bank 47 0x00 bit 15
11	0	RW	**Force_lnk** Force link. 1 = force link pass. 0 = normal operation.	Bank 47 0x02 bit 3
10	1	RW	**pwrsave** Power-saving. 1 = disable power saving. 0 = enable power saving.	Bank 47 0x02 bit 2
9	0	RW	**Remote (Near-End) Loopback (rlb)** 1 = perform remote loopback at Port 1's PHY (RXP1/RXM1 -> TXP1/TXM1, see Figure 15) 0 = normal operation	Bank 47 0x02 bit 1
8-0	0x000	RO	**Vct_fault_count** VCT fault count. Distance to the fault. It’s approximately 0.4m*vct_fault_count.	Bank 47 0x00 bit 8-0

Bank 49 Port 1 Control Register 4 (0x02): P1CR4

This register contains the global per port control for the switch function.

Bit	Default	R/W	Description	Bit is same as:
15	0	RW	**LED Off** 1 = Turn off all of the port 1 LEDs (P1LED3, P1LED2, P1LED1, P1LED0). These pins are driven high if this bit is set to one. 0 = normal operation.	Bank 45 0x00 bit 0
14	0	RW	**Txids** 1 = disable the port's transmitter. 0 = normal operation.	Bank 45 0x00 bit1
13	0	RW	**Restart AN** 1 = restart auto-negotiation. 0 = normal operation.	Bank 45 0x00 bit 9
12	0	RW	**Disable Far-End-Fault** 1 = disable far-end-fault detection and pattern transmission. 0 = enable far end fault detection and pattern transmission.	Bank 45 0x00 bit 2
11	0	RW	**Power Down** 1 = power down. 0 = normal operation.	Bank 45 0x00 bit 11
10	0	RW	**Disable auto MDI/MDI-X** 1 = disable auto MDI/MDI-X function. 0 = enable auto MDI/MDI-X function.	Bank 45 0x00 bit 3
9	0	RW	**Force MDI-X** 1= if auto MDI/MDI-X is disabled, force PHY into MDI-X mode. 0 = do not force PHY into MDI-X mode.	Bank 45 0x00 bit 4
8	0	RW	**Far-End Loopback** 1 = perform loopback, as indicated: Start: RXP2/RXM2 (port 2). Loopback: PMD/PMA of port 1's PHY. End: TXP2/TXM2 (port 2). 0 = normal operation.	Bank 45 0x00 bit 14
7	1	RW	**Auto Negotiation Enable** 1 = auto negotiation is enabled. 0 = disable auto negotiation, speed, and duplex are decided by bits 6 and 5 of the same register.	Bank 45 0x00 bit 12
6	0	RW	**Force Speed** 1 = force 100BT if AN is disabled (bit 7). 0 = force 10BT if AN is disabled (bit 7).	Bank 45 0x00 bit 13
5	0	RW	**Force Duplex** 1 = force full duplex if (1) AN is disabled or (2) AN is enabled but failed. 0 = force half duplex if (1) AN is disabled or (2) AN is enabled but failed.	Bank 45 0x00 bit 8

Bit	Default	R/W	Description	Bit is same as:
4	1	RW	**Advertised flow control capability.** 1 = advertise flow control (pause) capability. 0 = suppress flow control (pause) capability from transmission to link partner.	Bank 45 0x08 bit 10
3	1	RW	**Advertised 100BT full-duplex capability.** 1 = advertise 100BT full-duplex capability. 0 = suppress 100BT full-duplex capability from transmission to link partner.	Bank 45 0x08 bit 8
2	1	RW	**Advertised 100BT half-duplex capability.** 1 = advertise 100BT half-duplex capability. 0 = suppress 100BT half-duplex capability from transmission to link partner.	Bank 45 0x08 bit 7
1	1	RW	**Advertised 10BT full-duplex capability.** 1 = advertise 10BT full-duplex capability. 0 = suppress 10BT full-duplex capability from transmission to link partner.	Bank 45 0x08 bit 6
0	1	RW	**Advertised 10BT half-duplex capability.** 1 = advertise 10BT half-duplex capability. 0 = suppress 10BT half-duplex capability from transmission to link partner.	Bank 45 0x08 bit 5

Bank 49 Port 1 Status Register (0x04): P1SR

This register contains the global per port status for the switch function.

Bit	Default	R/W	Description	Bit is same as:
15	1	RW	**HP_mdix** 1 = HP Auto MDI-X mode. 0 = Micrel Auto MDI-X mode.	Bank 45 0x00 bit 5
14	0	RO	Reserved	
13	0	RO	**Polarity Reverse** 1 = polarity is reversed. 0 = polarity is not reversed.	Bank 47 0x02 bit 5
12	0	RO	**Receive Flow Control Enable** 1 = receive flow control feature is active. 0 = receive flow control feature is inactive.	
11	0	RO	**Transmit Flow Control Enable** 1 = transmit flow control feature is active. 0 = transmit flow control feature is inactive.	
10	0	RO	**Operation Speed** 1 = link speed is 100Mbps. 0 = link speed is 10Mbps.	
9	0	RO	**Operation Duplex** 1 = link duplex is full. 0 = link duplex is half.	
8	0	RO	**Far-End-Fault** 1 = far-end-fault status detected.	Bank 45 0x02 bit 4

Bit	Default	R/W	Description	Bit is same as:
			0 = no Far-end-fault status detected.	
7	0	RO	**MDI-X status** 1 = MDI. 0 = MDI-X.	Bank 47 0x02 bit 4
6	0	RO	**AN Done** 1 = AN done. 0 = AN not done.	Bank 45 0x02 bit 5
5	0	RO	**Link Good** 1 = link good. 0 = link not good.	Bank 45 0x02 bit 2
4	0	RO	**Partner flow control capability.** 1 = link partner flow control (pause) capable. 0 = link partner not flow control (pause) capable.	Bank 45 0x0A bit 10
3	0	RO	**Partner 100BT full-duplex capability.** 1 = link partner 100BT full-duplex capable. 0 = link partner not 100BT full-duplex capable.	Bank 45 0x0A bit 8
2	0	RO	**Partner 100BT half-duplex capability.** 1 = link partner 100BT half-duplex capable. 0= link partner not 100BT half-duplex capable.	Bank 45 0x0A bit 7
1	0	RO	**Partner 10BT full-duplex capability.** 1= link partner 10BT full-duplex capable. 0 = link partner not 10BT full-duplex capable.	Bank 45 0x0A bit 6
0	0	RO	**Partner 10BT half-duplex capability.** 1 = link partner 10BT half-duplex capable. 0 = link partner not 10BT half-duplex capable.	Bank 45 0x0A bit 5

Bank 50 Port 2 Control Register 1 (0x00): P2CR1

This register contains the global per port control for the switch function. See description in P1CR1, Bank 48 (0x00)

Bank 50 Port 2 Control Register 2 (0x02): P2CR2

This register contains the global per port control for the switch function. See description in P1CR2, Bank 48 (0x02)

Bank 50 Port 2 VID Control Register (0x04): P2VIDCR

This register contains the global per port control for the switch function. See description in P1VIDCR, Bank 48 (0x04)

Bank 50 Port 2 Control Register 3 (0x06): P2CR3

This register contains the global per port control for the switch function. See description in P1CR3, Bank 48 (0x06)

Bank 50 Port 2 Ingress Rate Control Register (0x08): P2IRCR

This register contains per port ingress rate control. See description in P1IRCR, Bank 48 (0x08)

Bank 50 Port 2 Egress Rate Control Register (0x0A): P2ERCR

This register contains per port egress rate control. See description in P1ERCR, Bank 48 (0x0A)

Bank 51 Port 2 PHY Special Control/Status, LinkMD (0x00): P2SCSLMD

Bit	Default	R/W	Description	Bit is same as:
15	0	RO	**Vct_10m_short** 1 = Less than 10 meter short.	Bank 47 0x04 bit 12
14-13	0x0	RO	**Vct_result** VCT result. [00] = normal condition. [01] = open condition has been detected in the cable. [10] = short condition has been detected in the cable. [11] = cable diagnostic test has failed.	Bank 47 0x04 bit 14-13
12	0	RW SC	**Vct_en** VCT enable. 1 = the cable diagnostic test is enabled. It is self-cleared after the VCT test is done. 0 = it indicates the cable diagnostic test is completed and the status information is valid for read	Bank 47 0x04 bit 15
11	0	RW	**Force_lnk** Force link. 1 = force link pass. 0 = normal operation.	Bank 47 0x06 bit 3
10	1	RW	**Pwrsave** Power-saving. 1 = disable power saving. 0 = enable power saving.	Bank 47 0x06 bit 2
9	0	RW	**Remote (Near-End) Loopback (rlb)** 1 = perform remote loopback at Port 2's PHY (RXP2/RXM2 -> TXP2/TXM2, see Figure 15) 0 = normal operation	Bank 47 0x06 bit 1
8-0	0x000	RO	**Vct_fault_count** VCT fault count. The distance to the fault is approximately 0.4m*vct_fault_count.	Bank 47 0x04 bit 8-0

Bank 51 Port 2 Control Register 4 (0x02): P2CR4

This register contains the global per port control for the switch function.

Bit	Default	R/W	Description	Bit is same as:
15	0	RW	**LED Off** 1 = turn off all of the port 2 LEDs (P2LED3, P2LED2, P2LED1, P2LED0). These pins are driven High if this bit is set to 1. 0 = normal operation.	Bank 46 0x00 bit 0
14	0	RW	**Txids** 1 = disable port's transmitter. 0 = normal operation.	Bank 46 0x00 bit 1
13	0	RW	**Restart AN** 1 = restart auto-negotiation. 0 = normal operation.	Bank 46 0x00 bit 9
12	0	RW	**Disable Far-End-Fault** 1 = disable far end fault detection and pattern transmission. 0 = enable far end fault detection and pattern transmission.	Bank 46 0x00 bit 2
11	0	RW	**Power Down** 1 = power-down. 0 = normal operation.	Bank 46 0x00 bit 11
10	0	RW	**Disable Auto MDI/MDI-X** 1= disable auto MDI/MDI-X function. 0= enable auto MDI/MDI-X function.	Bank 46 0x00 bit 3
9	0	RW	**Force MDI-X** 1 = if auto MDI/MDI-X is disabled, force PHY into MDI-X mode. 0 = do not force PHY into MDI-X mode.	Bank 46 0x00 bit 4
8	0	RW	**Far-End Loopback** 1 = perform loopback, as indicated (see Figure 14): Start: RXP1/RXM1 (port 1). Loopback: PMD/PMA of port 2's PHY. End: TXP1/TXM1 (port 1). 0 = normal operation.	Bank 46 0x00 bit 14
7	1	RW	**Auto Negotiation Enable** 0 = disable auto negotiation, speed and duplex are decided by bits 6 and 5 of the same register. 1 = auto negotiation is ON.	Bank 46 0x00 bit 12
6	0	RW	**Force Speed** 1 = force 100BT if AN is disabled (bit 7). 0 = force 10BT if AN is disabled (bit 7).	Bank 46 0x00 bit 13
5	0	RW	**Force Duplex** 1 = force full duplex if (1) AN is disabled or (2) AN is enabled but failed. 0 = force half duplex if (1) AN is disabled or (2) AN	Bank 46 0x00 bit 8

Bit	Default	R/W	Description	Bit is same as:
			is enabled but failed.	
4	1	RW	**Advertised flow control capability.** 1 = advertise flow control (pause) capability. 0 = suppress flow control (pause) capability from transmission to the link partner.	Bank 46 0x08 bit 10
3	1	RW	**Advertised 100BT Full-duplex capability.** 1 = advertise 100BT full-duplex capability. 0 = suppress 100BT full-duplex capability from transmission to the link partner.	Bank 46 0x08 bit 8
2	1	RW	**Advertised 100BT half-duplex capability.** 1 = advertise 100BT half-duplex capability. 1 = suppress 100BT half-duplex capability from transmission to the link partner.	Bank 46 0x08 bit 7
1	1	RW	**Advertised 10BT full-duplex capability.** 1 = advertise 10BT full-duplex capability. 0 = suppress 10BT full-duplex capability from transmission to the link partner.	Bank 46 0x08 bit 6
0	1	RW	**Advertised 10BT half-duplex capability.** 1 = advertise 10BT half-duplex capability. 0 = suppress 10BT half-duplex capability from transmission to the link partner.	Bank 46 0x08 bit 5

Bank 51 Port 2 Status Register (0x04): P2SR

This register contains the global per port status for the switch function.

Bit	Default	R/W	Description	Bit is same as:
15	1	RW	**HP_mdix** 1 = HP Auto MDI-X mode. 0 = Micrel Auto MDI-X mode.	Bank 46 0x00 bit 5
14	0	RO	Reserved	
13	0	RO	**Polarity Reverse** 1 = polarity is reversed. 0 = polarity is not reversed.	Bank 47 0x06 bit 5
12	0	RO	**Receive Flow Control Enable** 1 = receive flow control feature is active. 0 = receive flow control feature is inactive.	
11	0	RO	**Transmit Flow Control Enable** 1 = transmit flow control feature is active. 0 = transmit flow control feature is inactive.	
10	0	RO	**Operation Speed** 1 = link speed is 100Mbps. 0 = link speed is 10Mbps.	
9	0	RO	**Operation Duplex** 1 = link duplex is full. 0 = link duplex is half.	
8	0	RO	**Far-End-Fault**	Bank 46 0x02 bit 4

Bit	Default	R/W	Description	Bit is same as:
			1 = far-end-fault status detected. 0 = no Far end fault status detected.	
7	0	RO	**MDI-X Status** 1 = MDI. 0 = MDI-X.	Bank 47 0x06 bit 4
6	0	RO	**AN Done** 1 = AN done. 0 = AN not done.	Bank 46 0x02 bit 5
5	0	RO	**Link Good** 1 = link good. 0 = link not good.	Bank 46 0x02 bit 2
4	0	RO	**Partner flow control capability.** 1 = link partner flow control (pause) capable. 0 = link partner not flow control (pause) capable.	Bank 46 0x0A bit 10
3	0	RO	**Partner 100BT full-duplex capability.** 1 = link partner 100BT full-duplex capable. 0 = link partner not 100BT full-duplex capable.	Bank 46 0x0A bit 8
2	0	RO	**Partner 100BT half duplex capability.** 1 = link partner 100BT half-duplex capable. 0 = link partner not 100BT half-duplex capable.	Bank 46 0x0A bit 7
1	0	RO	**Partner 10BT full-duplex capability.** 1 = link partner 10BT full-duplex capable. 0 = link partner not 10BT full-duplex capable.	Bank 46 0x0A bit 6
0	0	RO	**Partner 10BT half-duplex capability.** 1 = link partner 10BT half-duplex capable. 0 = link partner not 10BT half-duplex capable.	Bank 46 0x0A bit 5

Bank 52 Host Port Control Register 1 (0x00): P3CR1

This register contains the global per port control for the switch function. See description in P1CR1, Bank 48 (0x00)

Bank 52 Host Port Control Register 2 (0x02): P3CR2

This register contains the global per port control for the switch function.

Bit	Default	R/W	Description
15	0		Reserved
14	0	RW	**Ingress VLAN Filtering** 1 = the switch discards packets whose VID port membership in VLAN table bits [18:16] does not include the ingress port. 0 = no ingress VLAN filtering.
13	0	RW	**Discard Non PVID Packets** 1 = the switch discards packets whose VID does not match the ingress port default VID. 0 = no packets are discarded.
12	0	RO	Reserved
11	0	RO	Reserved
10	1	RW	**Transmit Enable**

Bit	Default	R/W	Description
			1 = enable packet transmission on the port. 0 = disable packet transmission on the port.
9	1	RW	**Receive Enable** 1 = enable packet reception on the port. 0 = disable packet reception on the port.
8	0	RW	**Learning Disable** 1 = disable switch address learning capability. 0 = enable switch address learning.
7	0	RW	**Sniffer Port** 1 = port is designated as the sniffer port and transmits packets that are monitored. 0 = port is a normal port.
6	0	RW	**Receive Sniff** 1 = all packets received on the port are marked as “monitored packets” and forwarded to the designated “sniffer port”. 0 = no receive monitoring.
5	0	RW	**Transmit Sniff** 1 = all packets transmitted on the port are marked as “monitored packets” and forwarded to the designated “sniffer port”. 0 = no transmit monitoring.
4	0	RW	Reserved
3	0	RW	**User Priority Ceiling** 1 = if the packet’s “user priority field” is greater than the “user priority field” in the port default tag register, replace the packet’s “user priority field” with the “user priority field” in the port default tag register. 0 = do no compare and replace the packet’s ‘user priority field.”
2-0	0x7	RW	**Port VLAN Membership** Define the port’s Port VLAN membership. Bit 2 stands for host port, bit 1 for port 2, and bit 0 for port 1. The port can only communicate within the membership. A ‘1’ includes a port in the membership; a ‘0’ excludes a port from the membership.

Bank 52 Host Port VID Control Register (0x04): P3VIDCR

This register contains the global per port control for the switch function. See description in P1VIDCR, Bank 48 (0x04)

Bank 52 Host Port Control Register 3 (0x06): P3CR3

This register contains the global per port control for the switch function. See description in P1CR3, Bank 48 (0x06)

Bank 52 Host Port Ingress Rate Control Register (0x08): P3IRCR

This register contains per port ingress rate control. See description in P1IRCR, Bank 48 (0x08)

Bank 52 Host Port Egress Rate Control Register (0x0A): P3ERCR

This register contains per port egress rate control. See description in P1ERCR, Bank 48 (0x0A)

Banks 53 – 63: Reserved

Except Bank Select Register (0xE)

MIB (Management Information Base) Counters

The KSZ8842M provides 34 MIB counters for each port. These counters are used to monitor the port activity for network management. The MIB counters are formatted “per port” as shown in Table 14 and “all ports dropped packet” as shown in Table 16.

Bit	Name	R/W	Description	Default
31	Overflow	RO	1: counter overflow. 0: no counter overflow.	0
30	Count valid	RO	1: counter value is valid. 0: counter value is not valid.	0
29-0	Counter values	RO	Counter value (read clear)	0x00000000

Table 14. Format of Per Port MIB Counters

“Per Port” MIB counters are read using indirect memory access. The base address offsets and address ranges for both Ethernet ports are:

Port 1, base address is 0x00 and range is from 0x00 to 0x1f.
Port 2, base address is 0x20 and range is from 0x20 to 0x3f.

Per port MIB counters are read using indirect access control register in IACR, Bank 42 (0x00) and indirect access data registers in IADR4[15:0], IADR5[31:16]. Table 15 shows the port 1 MIB counters address memory offset.

Offset	Counter Name	Description
0x0	RxLoPriorityByte	Rx lo-priority (default) octet count including bad packets
0x1	RxHiPriorityByte	Rx hi-priority octet count including bad packets
0x2	RxUndersizePkt	Rx undersize packets w/ good CRC
0x3	RxFragments	Rx fragment packets w/ bad CRC, symbol errors or alignment errors
0x4	RxOversize	Rx oversize packets w/ good CRC (max: 1536 or 1522 bytes)
0x5	RxJabbers	Rx packets longer than 1522 bytes w/ either CRC errors, alignment errors, or symbol errors (depends on max packet size setting)
0x6	RxSymbolError	Rx packets w/ invalid data symbol and legal packet size.
0x7	RxCRCError	Rx packets within (64,1522) bytes w/ an integral number of bytes and a bad CRC (upper limit depends on max packet size setting)
0x8	RxAlignmentError	Rx packets within (64,1522) bytes w/ a non-integral number of bytes and a bad CRC (upper limit depends on max packet size setting)
0x9	RxControl8808Pkts	Number of MAC control frames received by a port with 88-08h in EtherType field
0xA	RxPausePkts	Number of PAUSE frames received by a port. PAUSE frame is qualified with EtherType (88-08h), DA, control opcode (00-01), data length (64B min), and a valid CRC
0xB	RxBroadcast	Rx good broadcast packets (not including error broadcast packets or valid multicast packets)
0xC	RxMulticast	Rx good multicast packets (not including MAC control frames, error multicast packets or valid broadcast packets)
0xD	RxUnicast	Rx good unicast packets
0xE	Rx64Octets	Total Rx packets (bad packets included) that were 64 octets in length
0xF	Rx65to127Octets	Total Rx packets (bad packets included) that are between 65 and 127 octets in length
0x10	Rx128to255Octets	Total Rx packets (bad packets included) that are between 128 and 255 octets in length
0x11	Rx256to511Octets	Total Rx packets (bad packets included) that are between 256 and 511 octets in length

Offset	Counter Name	Description
0x12	Rx512to1023Octets	Total Rx packets (bad packets included) that are between 512 and 1023 octets in length
0x13	Rx1024to1522Octets	Total Rx packets (bad packets included) that are between 1024 and 1522 octets in length (upper limit depends on max packet size setting)
0x14	TxLoPriorityByte	Tx lo-priority good octet count, including PAUSE packets
0x15	TxHiPriorityByte	Tx hi-priority good octet count, including PAUSE packets
0x16	TxLateCollision	The number of times a collision is detected later than 512 bit-times into the Tx of a packet
0x17	TxPausePkts	Number of PAUSE frames transmitted by a port
0x18	TxBroadcastPkts	Tx good broadcast packets (not including error broadcast or valid multicast packets)
0x19	TxMulticastPkts	Tx good multicast packets (not including error multicast packets or valid broadcast packets)
0x1A	TxUnicastPkts	Tx good unicast packets
0x1B	TxDeferred	Tx packets by a port for which the 1st Tx attempt is delayed due to the busy medium
0x1C	TxTotalCollision	Tx total collision, half duplex only
0x1D	TxExcessiveCollision	A count of frames for which Tx fails due to excessive collisions
0x1E	TxSingleCollision	Successfully Tx frames on a port for which Tx is inhibited by exactly one collision
0x1F	TxMultipleCollision	Successfully Tx frames on a port for which Tx is inhibited by more than one collision

Table 15. Port 1 MIB Counters Indirect Memory Offset

Format of “All Ports Dropped Packet” MIB Counters

Bit	Default	R/W	Description
30-16	-	N/A	Reserved
15-0	0x0000	RO	Counter Value

Table 16. “All Ports Dropped Packet” MIB Counters Format

Note: “All Ports Dropped Packet” MIB Counters do not indicate overflow or validity; therefore, the application must keep track of overflow and valid conditions.

“All Ports Dropped Packet” MIB counters are read using indirect memory access. The address offsets for these counters are shown in Table 17.

Offset	Counter Name	Description
0x100	Port1 TX Drop Packets	TX packets dropped due to lack of resources
0x101	Port2 TX Drop Packets	TX packets dropped due to lack of resources
0x103	Port1 RX Drop Packets	RX packets dropped due to lack of resources
0x104	Port2 RX Drop Packets	RX packets dropped due to lack of resources

Table 17. “All Ports Dropped Packet” MIB Counters Indirect Memory Offsets

Examples:

1. **MIB Counter Read (read port 1 “Rx64Octets” counter at indirect address offset 0x0E)**

   Write to reg. IACR with 0x1c0e (set indirect address and trigger a read MIB counters operation)

   Then

   Read reg. IADR5 (MIB counter value 31-16) // If bit 31 = 1, there was a counter overflow
   // If bit 30 = 0, restart (reread) from this register
   Read reg. IADR4 (MIB counter value 15-0)

2. **MIB Counter Read (read port 2 “Rx64Octets” counter at indirect address offset 0x2E)**

   Write to reg. IACR with 0x1c2e (set indirect address and trigger a read MIB counters operation)

   Then

   Read reg. IADR5 (MIB counter value 31-16) // If bit 31 = 1, there was a counter overflow
   // If bit 30 = 0, restart (reread) from this register
   Read reg. IADR4 (MIB counter value 15-0)

3. **MIB Counter Read (read “Port1 TX Drop Packets” counter at indirect address offset 0x100)**

   Write to reg. IACR with 0x1d00 (set indirect address and trigger a read MIB counters operation)

   Then

   Read reg. IADR4 (MIB counter value 15-0)

Additional MIB Information

Per Port MIB counters are designed as “read clear”. That is, these counters will be cleared after they are read. All Ports Dropped Packet MIB counters are not cleared after they are accessed. The application needs to keep track of overflow and valid conditions on these counters.

Static MAC Address Table

The KSZ8842M supports both a static and a dynamic MAC address table. In response to a Destination Address (DA) look up, The KSZ8842M searches both tables to make a packet forwarding decision. In response to a Source Address (SA) look up, only the dynamic table is searched for aging, migration and learning purposes.

The static DA look up result takes precedence over the dynamic DA look up result. If there is a DA match in both tables, the result from the static table is used. These entries in the static table will not be aged out by the KSZ8842M.

Bit	Default Value	R/W	Description
57-54	0000	RW	**FID** Filter VLAN ID - identifies one of the 16 active VLANs.
53	0	R/W	**Use FID** 1: specifies the useof FID+MAC for static table look ups 0: specifies only the use of MAC for static table look ups
52	0	R/W	**Override** 1: overrides the port setting “transmit enable = 0” or “receive enable = 0” setting. 0: specifies no override
51	0	R/W	**Valid** 1: specifies that this entry is valid, the look up result will be used 0: specifies that this entry is not valid
50-48	000	R/W	**Forwarding ports** These 3 bits control the forwarding port(s): 000: no forward 001: forward to port 1 010: forward to port 2 100: forward to port 3 011: forward to port 1 and port 2 110: forward to port 2 and port 3 101: forward to port 1 and port 3 111: broadcasting (excluding the ingress port)
47-0	0	R/W	**MAC address** 48 bits MAC Address

Table 18. Static MAC Table Format

Static MAC Table Lookup Examples:

1. **Static Address Table Read (read the second entry at indirect address offset 0x01)**

   Write to reg. IACR with 0x1001 (set indirect address and trigger a read static MAC table operation)

   Then

   Read reg. IADR3 (static MAC table bits 57-48)
   Read reg. IADR2 (static MAC table bits 47-32)
   Read reg. IADR5 (static MAC table bits 31-16)
   Read reg. IADR4 (static MAC table bits 15-0)

2. **Static Address Table Write (write the eighth entry at indirect address offset 0x07)**

   Write to reg. IADR3 (static MAC table bits 57-48)
   Write to reg. IADR2 (static MAC table bits 47-32)
   Write to reg. IADR5 (static MAC table bits 31-16)
   Write to reg. IADR4 (static MAC table bits 15-0)
   Write to reg. IACR with 0x0007 (set indirect address and trigger a write static MAC table operation)

Dynamic MAC Address Table

The Dynamic MAC address is a read only table.

Bit	Default Value	R/W	Description
71		RO	**Data not ready** 1: specifies that the entry is not ready, continue retrying until bit is set to 0 0: specifies that the entry is ready
70-67		RO	Reserved
66	1	RO	**MAC empty** 1: specifies that there is no valid entry in the table 0: specifies that there are valid entries in the table
65-56	0x000	RO	**No of valid entries** Indicates how many valid entries in the table 0x3ff means 1 K entries 0x001 means 2 entries 0x000 and bit 66 = 0 means 1 entry 0x000 and bit 66 = 1 means 0 entry
55-54		RO	**Time Stamp** Specifies the 2-bit counter for internal aging.
53-52	00	RO	**Source port** Identifies the source port where FID+MAC is learned: 00: port 1 01: port 2 10: port 3
51-48	0x0	RO	**FID** Specifies the filter ID.
47-0	0x0000_0000_0000	RO	**MAC Address** Specifies the 48-bit MAC address.

Table 19. Dynamic MAC Address Table Format

Dynamic MAC Address Lookup Example:

Dynamic MAC Address Table Read (read the first entry at indirect address offset 0 and retrieve the MAC table size)

Write to reg. IACR with 0x1800 (set indirect address and trigger a read dynamic MAC table operation)

Then

Read reg. IADR1 (dynamic MAC table bits 71-64) // If bit 71 = 1, restart (reread) from this register
Read reg. IADR3 (dynamic MAC table bits 63-48)
Read reg. IADR2 (dynamic MAC table bits 47-32)
Read reg. IADR5 (dynamic MAC table bits 31-16)
Read reg. IADR4 (dynamic MAC table bits 15-0)

VLAN Table

The KSZ8842M uses the VLAN table to perform look-ups. If 802.1Q VLAN mode is enabled (SGCR2[15]), this table will be used to retrieve the VLAN information that is associated with the ingress packet. This information includes FID (filter ID), VID (VLAN ID), and VLAN membership as described in Table 20:

Bit	Default Value	R/W	Description
19	1	RW	**Valid** 1: specifies that this entry is valid, the look up result will be used 0: specifies that this entry is not valid
18-16	111	R/W	**Membership** Specifies which ports are members of the VLAN. If a DA look up fails (no match in both static and dynamic tables), the packet associated with this VLAN will be forwarded to ports specified in this field. For example: 101 means port 3 and 1 are in this VLAN.
15-12	0x0	R/W	**FID** Specifies the Filter ID. The KSZ8842M supports 16 active VLANs represented by these four bit fields. The FID is the mapped ID. If 802.1Q VLAN is enabled, the look up will be based on FID+DA and FID+SA.
11-0	0x001	R/W	**VID** Specifies the IEEE 802.1Q 12 bits VLAN ID.

Table 20. VLAN Table Format

If 802.1Q VLAN mode is enabled, KSZ8842M will assign a VID to every ingress packet. If the packet is untagged or tagged with a null VID, the packet is assigned with the default port VID of the ingress port. If the packet is tagged with non null VID, the VID in the tag will be used. The look up process will start from the VLAN table look up. If the VID is not valid, the packet will be dropped and no address learning will take place. If the VID is valid, the FID is retrieved. The FID+DA and FID+SA lookups are performed. The FID+DA look up determines the forwarding ports. If FID+DA fails, the packet will be broadcast to all the members (excluding the ingress port) of the VLAN. If FID+SA fails, the FID+SA will be learned.

VLAN Table Lookup Examples:

Examples:

1. **VLAN Table Read (read the third entry, at the indirect address offset 0x02)**
   Write to reg. IACR with 0x1402 (set indirect address and trigger a read VLAN table operation)

   Then

   Read reg. IADR5 (VLAN table bits 19-16)
   Read reg. IADR4 (VLAN table bits 15-0)

2. **VLAN Table Write (write the seventh entry, at the indirect address offset 0x06)**
   Write to reg. IADR5 (VLAN table bits 19-16)
   Write to reg. IADR4 (VLAN table bits 15-0)
   Write to reg. IACR with 0x1406 (set indirect address and trigger a read VLAN table operation)

Absolute Maximum Ratings[1]

Description	Pins	Value
Supply Voltage	VDDATX, VDDARX, VDDIO	–0.5V to 4.0V
Input Voltage	All Inputs	–0.5V to 5V
Output Voltage	All Outputs	–0.5V to 4.0V
Lead Temperature (soldering, 10 sec)	N/A	—
Storage Temperature (Ts)	N/A	–55°C to 150°C

Table 21. Maximum Ratings

Note:

1. Exceeding the absolute maximum rating may damage the device.

Stresses greater than those listed in the table above may cause permanent damage to the device. Operation of the device at these or any other conditions above those specified in the operating sections of this specification is not implied. Maximum conditions for extended periods may affect reliability. Unused inputs must always be tied to an appropriate logic voltage level.

Operating Ratings[1]

Parameter	Symbol	Min	Typ	Max
Supply Voltages	VDDATX,VDDARX VDDIO	3.1V 3.1V	3.3V 3.3V	3.5V 3.5V
Ambient Operating Temperature	TA	0°C		70°C
Maximum Junction Temperature	TJ			125°C
Thermal Resistance Junction to Ambient[2]	θJA		32°C/W	

Table 22. Operating Ratings

Notes:

1. The device is not guaranteed to function outside its operating rating. Unused inputs must always be tied to an appropriate logic voltage level (Ground to VDD).
2. No (HS) heat spreader in this package.

Electrical Characteristics[1]

Parameter	Symbol	Condition	Min	Typ	Max
Supply Current for 100BASE-TX Operation (All Ports@100% Utilization)					
100BASE-TX (analog core + PLL + digital core + transceiver + digital I/O)	I_{ddxio}	VDDATX, VDDARX, VDDIO = 3.3V		122mA	
Supply Current for 10BASE-T Operation (All Ports@100% Utilization)					
10BASE-T (analog core + PLL + digital core + transceiver + digital I/O)	I_{ddxio}	VDDATX, VDDARX, VDDIO = 3.3V		90mA	
TTL Inputs					
Input High Voltage	V_{ih}		2.0V		
Input Low Voltage	V_{il}				0.8V
Input Current	I_{in}	Vin = GND ~ VDDIO	-10µA		10µA
TTL Outputs					
Output High Voltage	V_{oh}	I_{oh} = -8 mA	2.4V		
Output Low Voltage	V_{ol}	I_{ol} = 8 mA			0.4V
Output Tri-state Leakage	$\|I_{oz}\|$				10µA
100Base-TX Transmit (measured differentially after 1:1 transformer)					
Peak Differential Output Voltage	V_o	100Ω termination on the differential output.	±0.95V		±1.05V
Output Voltage Imbalance	V_{imb}	100Ω termination on the differential output			2%
Rise/Fall Time	T_r/T_f		3ns		5ns
Rise/Fall Time Imbalance			0ns		0.5ns
Duty Cycle Distortion					± 0.25ns
Overshoot					5%
Reference Voltage of ISET	V_{set}			0.5V	
Output Jitter		Peak to peak		0.7ns	1.4ns
10Base-T Receive					
Squelch Threshold	V_{sq}	5MHz square wave		400mV	
10Base-T Transmit (measured differentially after 1:1 transformer)					
Peak Differential Output Voltage	V_o	100Ω termination on the differential output		2.4V	
Output Jitter		Peak to peak		1.8ns	3.5ns

Note 1: TA = 25°C, specification for packaged product only

Table 23. Electrical Characteristics

Timing Specifications

Asynchronous Timing without using Address Strobe (ADSN = 0)

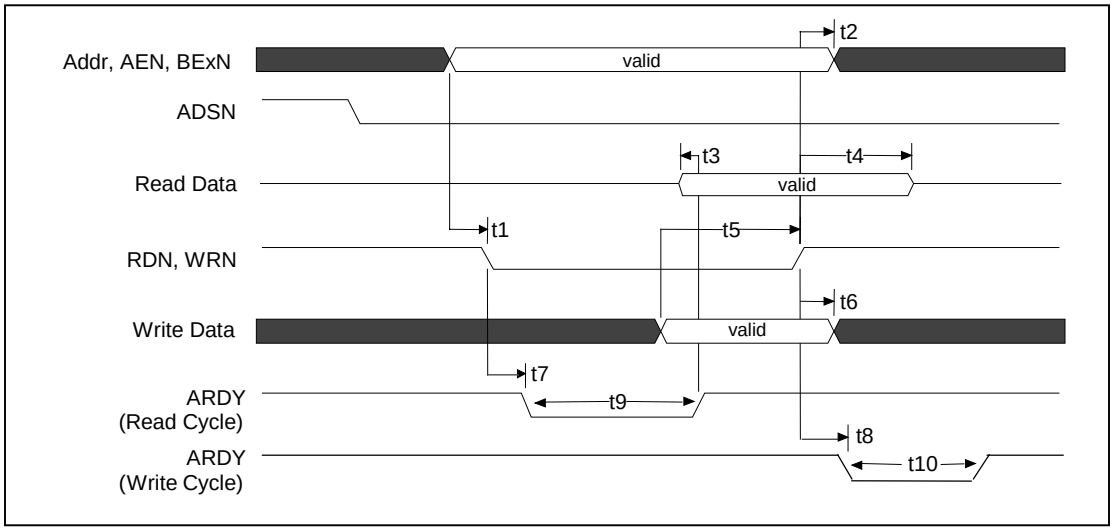

Figure 16. Asynchronous Cycle – ADSN = 0

Symbol	Parameter	Min	Typ	Max	Unit
t1	A1-A15, AEN, BExN[3:0] valid to RDN, WRN active	2			ns
t2	A1-A15, AEN, BExN[3:0] hold after RDN, WRN inactive (assume ADSN tied Low)	1			ns
t3	Read data valid to ARDY rising			0.8	ns
t4	Read data to hold RDN inactive	4			ns
t5	Write data setup to WRN inactive	4			ns
t6	Write data hold after WRN inactive	2			ns
t7	Read active to ARDY Low			8	ns
t8	Write inactive to ARDY Low			8	ns
t9	ARDY low (wait time) in read cycle (Note1) (It is 0ns to read bank select register) (It is 110ns to read QMU data register)	0	110		ns
t10	ARDY low (wait time) in write cycle (Note1) (It is 0ns to write bank select register) (It is 85ns to write QMU data register)	0	85		ns

Note1: When CPU finished current Read or Write operation, it can do next Read or Write operation even the ARDY is low. During Read or Write operation if the ADRY is low, the CPU has to keep the RDN/WRN low until the ARDY returns to high.

Table 24. Asynchronous Cycle (ADSN = 0) Timing Parameters

Asynchronous Timing using Address Strobe (ADSN)

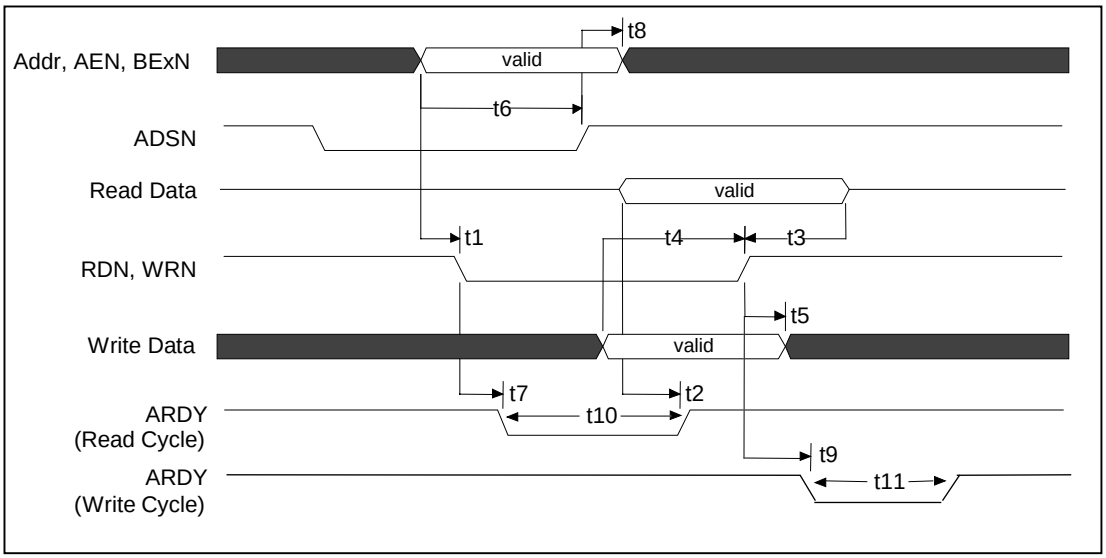

Figure 17. Asynchronous Cycle – Using ADSN

Symbol	Parameter	Min	Typ	Max	Unit
t1	A1-A15, AEN, BExN[3:0] valid to RDN, WRN active	2			ns
t2	Read data valid to ARDY rising			0.8	ns
t3	Read data hold to RDN inactive	4			ns
t4	Write data setup to WRN inactive	4			ns
t5	Write data hold after WRN inactive	2			ns
t6	A1-A15, AEN, nBE[3:0] setup to ADSN rising	4			ns
t7	Read active to ARDY Low			8	ns
t8	A1-A15, AEN, BExN[3:0] hold after ADSN rising	2			ns
t9	Write inactive to ARDY Low			8	ns
t10	ARDY low (wait time) in read cycle (Note1) (It is 0ns to read bank select register) (It is 110ns to read QMU data register)	0	110		ns
t11	ARDY low (wait time) in write cycle (Note1) (It is 0ns to write bank select register) (It is 85ns to write QMU data register)	0	85		ns

Note1: When CPU finished current Read or Write operation, it can do next Read or Write operation even the ARDY is low. During Read or Write operation if the ADRY is low, the CPU has to keep the RDN/WRN low until the ARDY returns to high.

Table 25. Asynchronous Cycle using ADSN Timing Parameters

Asynchronous Timing using DATACSN

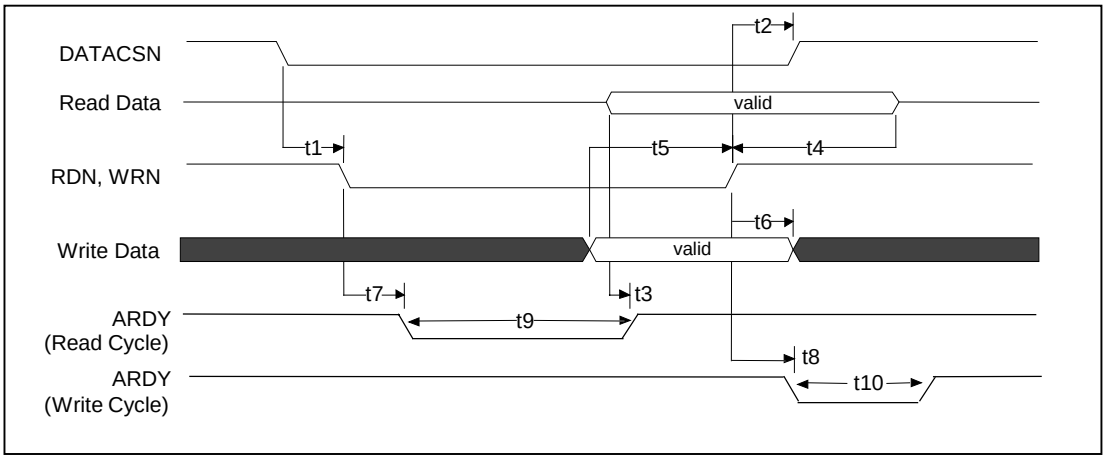

Figure 18. Asynchronous Cycle – Using DATACSN

Symbol	Parameter	Min	Typ	Max	Unit
t1	DATACSN setup to RDN, WRN active	2			ns
t2	DATACSN hold after RDN, WRN inactive (assume ADSN tied Low)	0			ns
t3	Read data hold to ARDY rising			0.8	ns
t4	Read data to RDN hold	4			ns
t5	Write data setup to WRN inactive	4			ns
t6	Write data hold after WRN inactive	2			ns
t7	Read active to ARDY Low			8	ns
t8	Write inactive to ARDY Low			8	ns
t9	ARDY low (wait time) in read cycle (Note1) (It is 0ns to read bank select register) (It is 110ns to read QMU data register)	0	110		ns
t10	ARDY low (wait time) in write cycle (Note1) (It is 0ns to write bank select register) (It is 85ns to write QMU data register)	0	85		ns

Note1: When CPU finished current Read or Write operation, it can do next Read or Write operation even the ARDY is low. During Read or Write operation if the ADRY is low, the CPU has to keep the RDN/WRN low until the ARDY returns to high.

Table 26. Asynchronous Cycle using DATACSN Timing Parameters

Address Latching Timing for All Modes

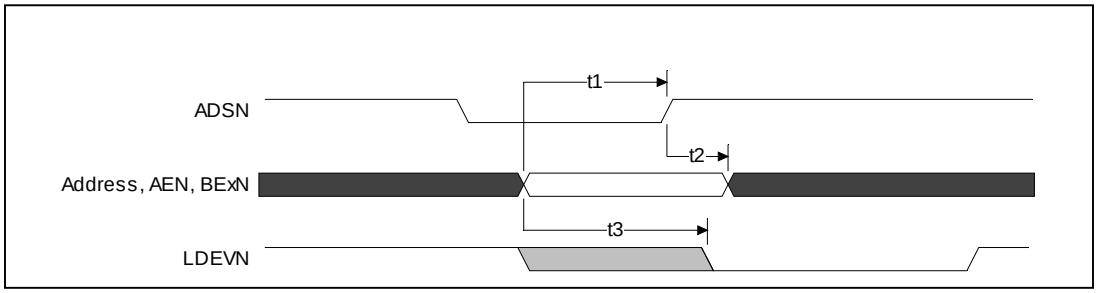

Figure 19. Address Latching Cycle for All Modes

Symbol	Parameter	Min	Typ	Max	Unit
t1	A1-A15, AEN, BExN[3:0] setup to ADSN	4			ns
t2	A1-A15, AEN, BExN[3:0] hold after ADSN rising	2			ns
t3	A4-A15, AEN to LDEVN delay			5	ns

Table 27. Address Latching Timing Parameters

Synchronous Timing in Burst Write (VLBUSN = 1)

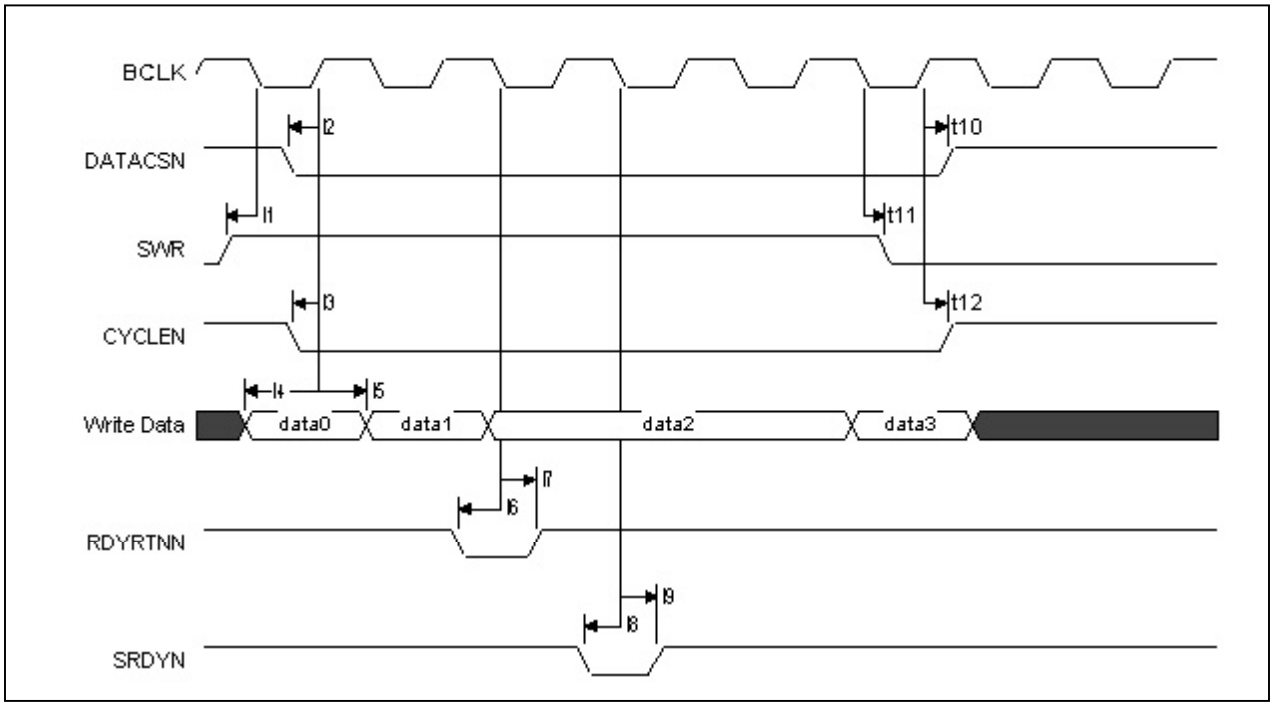

Figure 20. Synchronous Burst Write Cycles – VLBUSN = 1

Symbol	Parameter	Min	Typ	Max	Unit
t1	SWR setup to BCLK falling	4			ns
t2	DATDCSN setup to BCLK rising	4			ns
t3	CYCLEN setup to BCLK rising	4			ns
t4	Write data setup to BCLK rising	6			ns
t5	Write data hold to BCLK rising	2			ns
t6	RDYRTNN setup to BCLK falling	5			ns
t7	RDYRTNN hold to BCLK falling	3			ns
t8	SRDYN setup to BCLK rising	4			ns
t9	SRDYN hold to BCLK rising	3			ns
t10	DATACSN hold to BCLK rising	2			ns
t11	SWR hold to BCLK falling	2			ns
t12	CYCLEN hold to BCLK rising	2			ns

Table 28. Synchronous Burst Write Timing Parameters

Synchronous Timing in Burst Read (VLBUSN = 1)

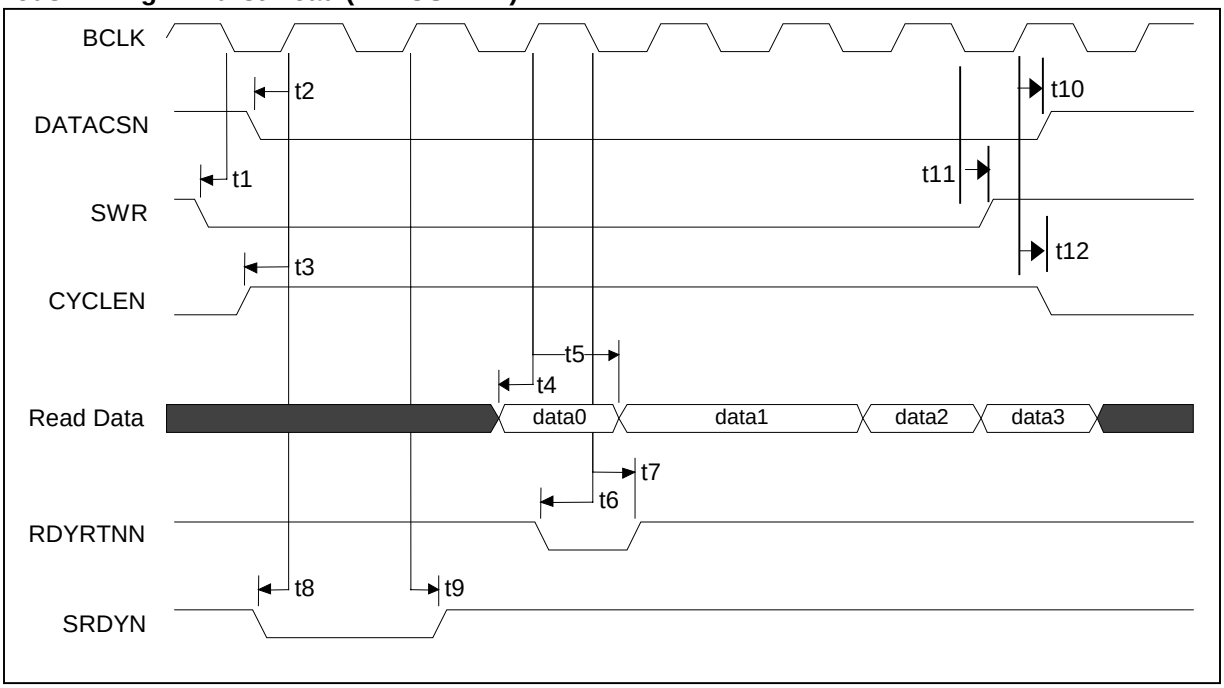

Figure 21. Synchronous Burst Read Cycles – VLBUSN = 1

Symbol	Parameter	Min	Typ	Max	Unit
t1	SWR setup to BCLK falling	4			ns
t2	DATDCSN setup to BCLK rising	4			ns
t3	CYCLEN setup to BCLK rising	4			ns
t4	Read data setup to BCLK rising	6			ns
t5	Read data hold to BCLK rising	2			ns
t6	RDYRTNN setup to BCLK falling	5			ns
t7	RDYRTNN hold to BCLK falling	3			ns
t8	SRDYN setup to BCLK rising	4			ns
t9	SRDYN hold to BCLK rising	3			ns
t10	DATACSN hold to BCLK rising	2			ns
t11	SWR hold to BCLK falling	2			ns
t12	CYCLEN hold to BCLK rising	2			ns

Table 29. Synchronous Burst Read Timing Parameters

Synchronous Write Timing (VLBUSN = 0)

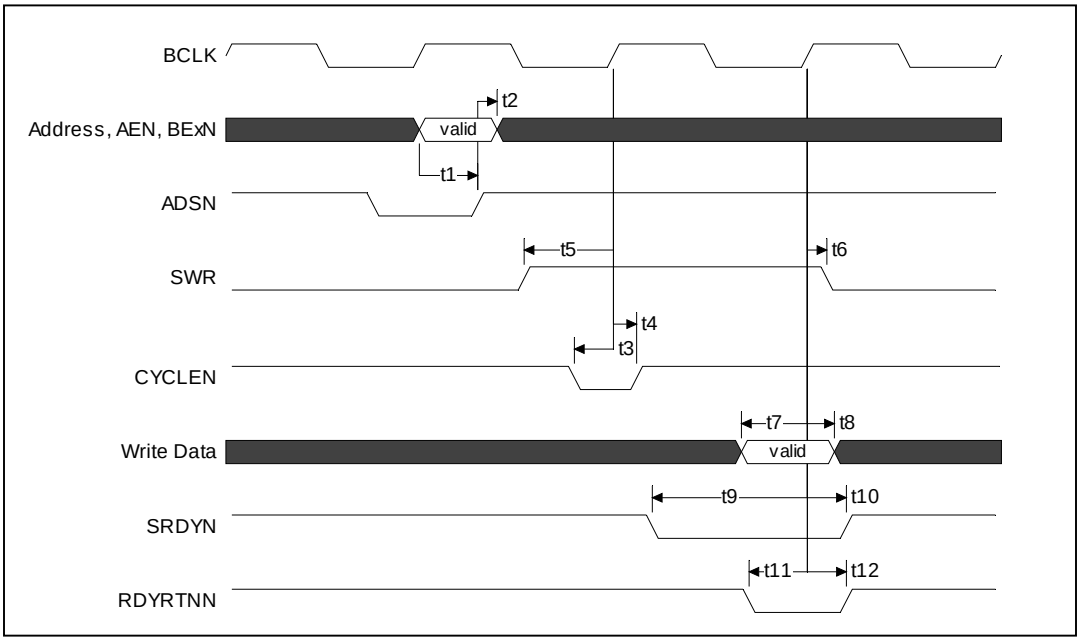

Figure 22. Synchronous Write Cycle – VLBUSN = 0

Symbol	Parameter	Min	Typ	Max	Unit
t1	A1-A15, AEN, BExN[3:0] setup to ADSN rising	4			ns
t2	A1-A15, AEN, BExN[3:0] hold after ADSN rising	2			ns
t3	CYCLEN setup to LCLK rising	4			ns
t4	CYCLEN hold after LCLK rising (non-burst mode)	2			ns
t5	SWR setup to BCLK	4			ns
t6	SWR hold after LCLK rising with SRDYN active	0			ns
t7	Write data setup to LCLK rising	5			ns
t8	Write data hold from LCLK rising	1			ns
t9	SRDYN setup to BCLK	8			ns
t10	SRDYN hold to BCLK	1			ns
t11	RDYRTNN setup to BCLK	4			ns
t12	RDYRTNN hold to BCLK	1			ns

Table 30. Synchronous Write (VLBUSN = 0) Timing Parameters

Synchronous Read Timing (VLBUSN = 0)

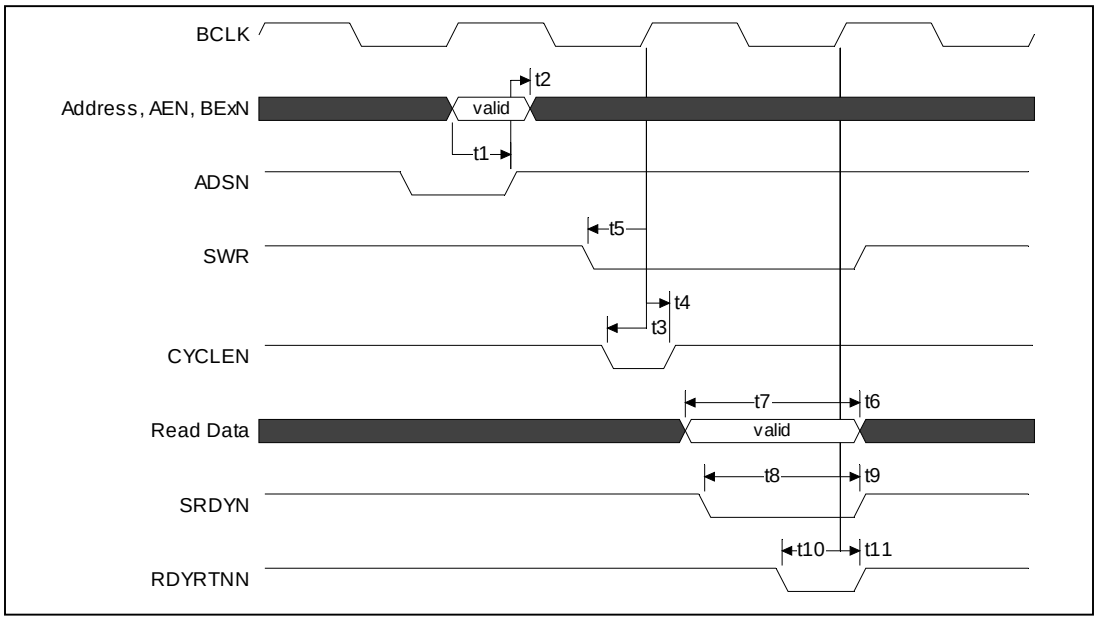

Figure 23. Synchronous Read Cycle – VLBUSN = 0

Symbol	Parameter	Min	Typ	Max	Unit
t1	A1-A15, AEN, BExN[3:0] setup to ADSN rising	4			ns
t2	A1-A15, AEN, BExN[3:0] hold after ADSN rising	2			ns
t3	CYCLEN setup to LCLK rising	4			ns
t4	CYCLEN hold after LCLK rising (non-burst mode)	2			ns
t5	SWR setup to BCLK	4			ns
t6	Read data hold from LCLK rising	1			ns
t7	Read data setup to BCLK	8			ns
t8	SRDYN setup to BCLK	8			ns
t9	SRDYN hold to BCLK	1			ns
t10	RDYRTNN setup to LCLK rising	4			ns
t11	RDYRTNN hold after LCLK rising	1			ns

Table 31. Synchronous Read (VLBUSN = 0) Timing Parameters

EEPROM Timing

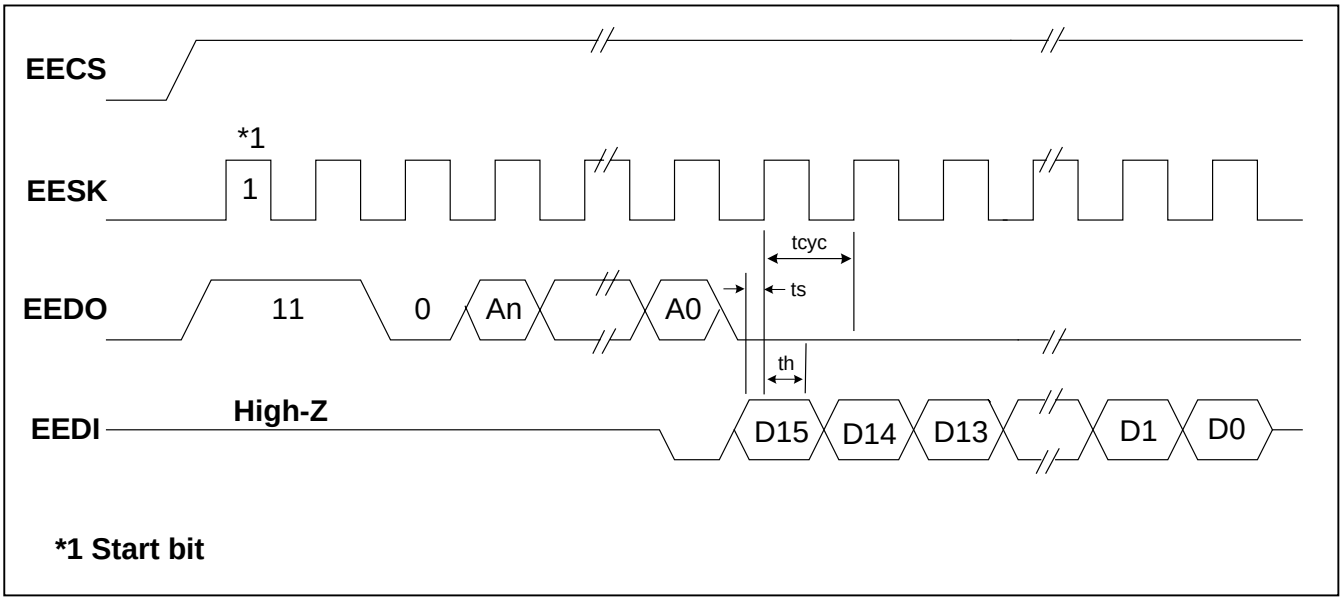

Figure 24. EEPROM Read Cycle Timing Diagram

Timing Parameter	Description	Min	Typ	Max	Unit
tcyc	Clock cycle		4		µs
ts	Setup time	20			ns
th	Hold time	20			ns

Table 32. EEPROM Timing Parameters

Auto Negotiation Timing

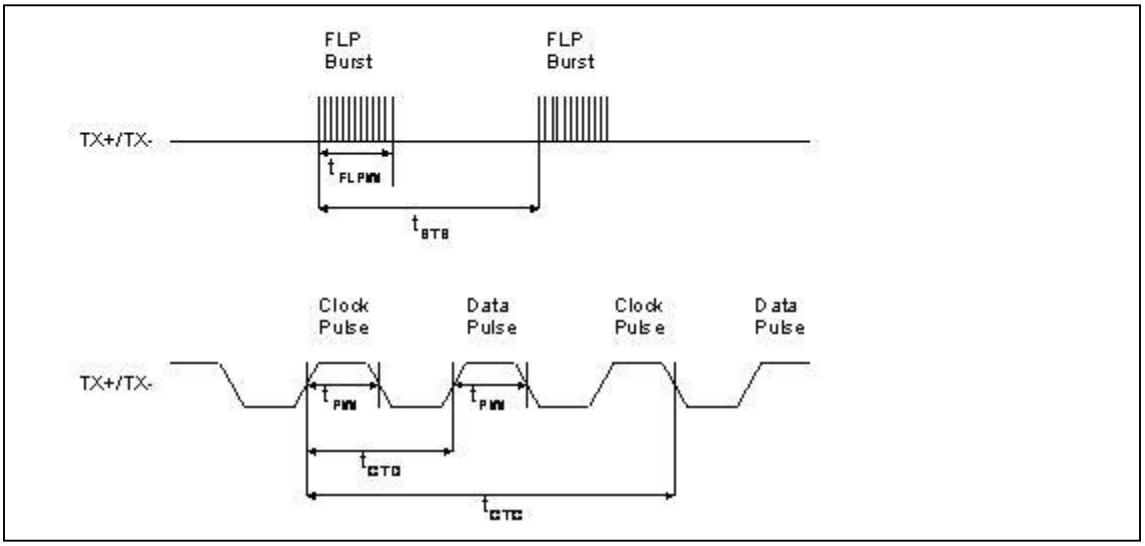

Figure 25. Auto-Negotiation Timing

Timing Parameter	Description	Min	Typ	Max	Unit
t_{BTB}	FLP burst to FLP burst	8	16	24	ms
t_{FLPW}	FLP burst width		2		ms
t_{PW}	Clock/Data pulse width		100		ns
t_{CTD}	Clock pulse to data pulse	55.5	64	69.5	µs
t_{CTC}	Clock pulse to clock pulse	111	128	139	µs
	Number of Clock/Data pulses per burst	17		33	

Table 33. Auto Negotiation Timing Parameters

Reset Timing

As long as the stable supply voltages to reset High timing (minimum of 10ms) are met, there is no power-sequencing requirement for the KSZ8842M supply voltage (3.3V).

The reset timing requirement is summarized in the Figure 26 and Table 34.

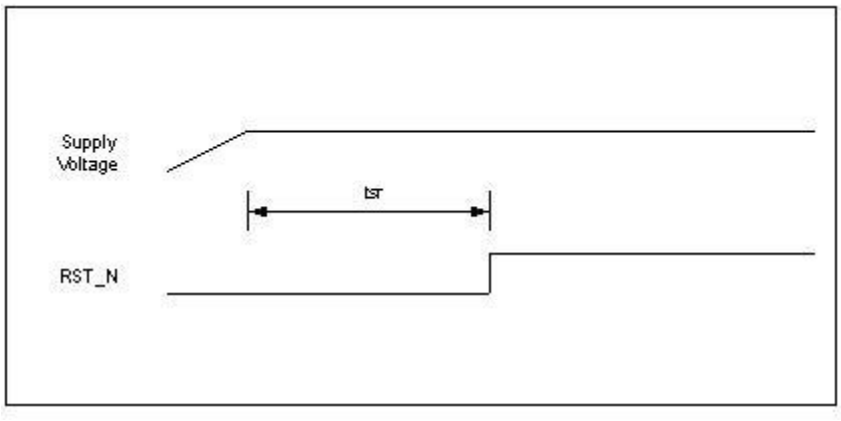

Figure 26. Reset Timing

Symbol	Parameter	Min	Max	Unit
tsr	Stable supply voltages to reset High	10		ms

Table 34. Reset Timing Parameters

Selection of Isolation Transformers

A 1:1 isolation transformer is required at the line interface. An isolation transformer with integrated common-mode choke is recommended to exceed FCC requirements.

Table 35 gives recommended transformer characteristics.

Parameter	Value	Test Condition
Turns ratio	1 CT : 1 CT	
Open-circuit inductance (min)	350μH	100mV, 100kHz, 8mA
Leakage inductance (max)	0.4μH	1MHz (min)
Inter-winding capacitance (max)	12pF	
D.C. resistance (max)	0.9Ω	
Insertion loss (max)	1.0dB	0MHz – 65MHz
HIPOT (min)	1500Vrms	

Table 35. Transformer Selection Criteria

Magnetic Manufacturer	Part Number	Auto MDI-X	Number of Port
Pulse	H1102	Yes	1
Pulse (low cost)	H1260	Yes	1
Transpower	HB726	Yes	1
Bel Fuse	S558-5999-U7	Yes	1
Delta	LF8505	Yes	1
LanKom	LF-H41S	Yes	1

Table 36. Qualified Single Port Magnetic

Selection of Reference Crystal

Chacteristics	Value	Units
Frequency	25	MHz
Frequency tolerance (max)	±50	ppm
Load capacitance (max)	20	pF
Series resistance	25	Ω

Table 37. Typical Reference Crystal Characteristics

Package Information

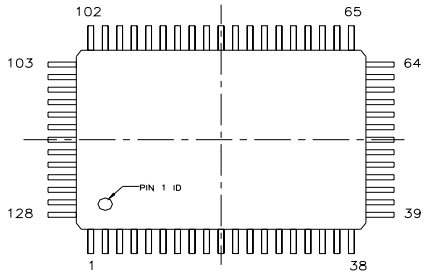

TOP VIEW

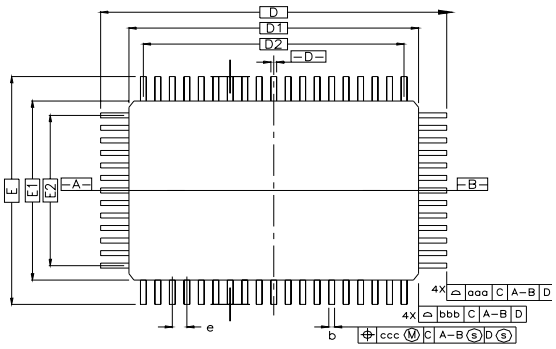

BOTTOM VIEW

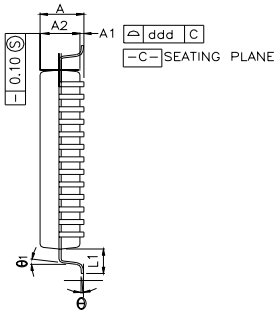

SIDE VIEW

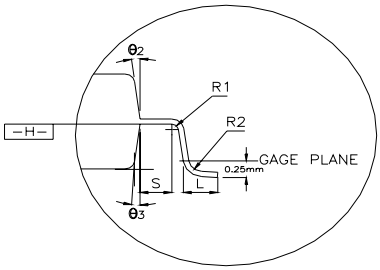

DETAILED VIEW

SYMBOL	MILLIMETER			INCH		
	MIN.	NOM.	MAX.	MIN.	NOM.	MAX.
A	—	—	3.40	—	—	0.134
A1	0.25	—	—	0.010	—	—
A2	2.50	2.72	2.90	0.098	0.107	0.114
D	23.20 BASIC			0.913 BASIC		
D1	20.00 BASIC			0.787 BASIC		
E	17.20 BASIC			0.677 BASIC		
E1	14.00 BASIC			0.551 BASIC		
R2	0.13	—	0.30	0.005	—	0.012
R1	0.13	—	—	0.005	—	—
θ	0°	—	7°	0°	—	7°
θ1	0°	—	—	0°	—	—
θ2 , θ3	15° REF			15° REF		
c	0.11	0.15	0.23	0.004	0.006	0.009
L	0.73	0.88	1.03	0.029	0.035	0.041
L1	1.60 REF			0.063 REF		
S	0.20	—	—	0.008	—	—
b	0.170	0.200	0.270	0.007	0.008	0.011
e	0.50 BSC.			0.20 BSC		
D2	18.50			0.728		
E2	12.50			0.492		
TOLERANCES OF FORM AND POSITION						
aaa	0.20			0.008		
bbb	0.20			0.008		
ccc	0.08			0.003		
ddd	0.08			0.003		

COTROL DIMENSIONS ARE IN MILLIMETERS.

Figure 27. 128-Pin PQFP Package

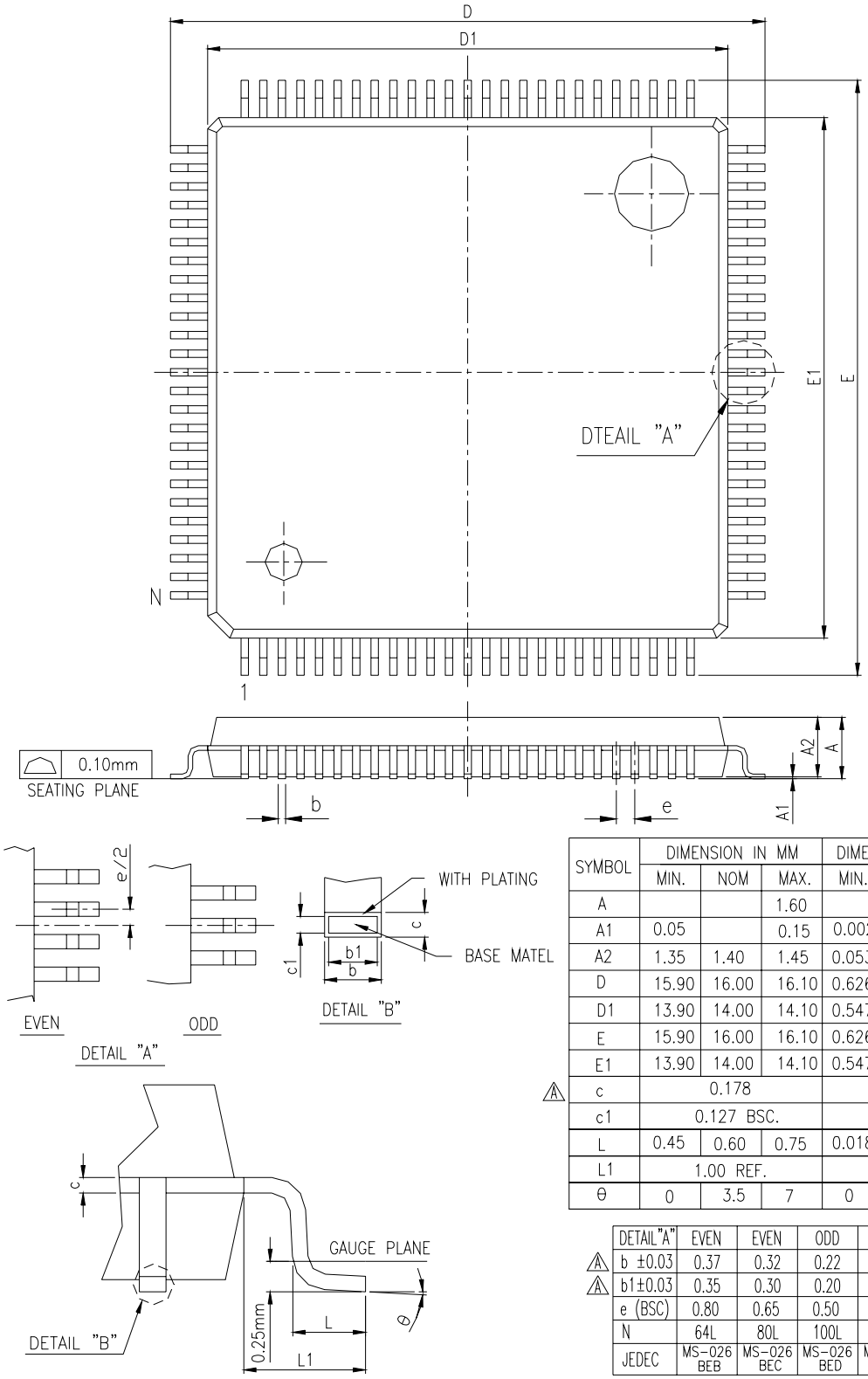

SYMBOL	DIMENSION IN MM			DIMENSION IN INCH		
	MIN.	NOM	MAX.	MIN.	NOM	MAX.
A			1.60			0.063
A1	0.05		0.15	0.002		0.006
A2	1.35	1.40	1.45	0.053	0.055	0.057
D	15.90	16.00	16.10	0.626	0.630	0.634
D1	13.90	14.00	14.10	0.547	0.551	0.555
E	15.90	16.00	16.10	0.626	0.630	0.634
E1	13.90	14.00	14.10	0.547	0.551	0.555
1 c	0.178			0.007		
c1	0.127 BSC.			0.005 BSC.		
L	0.45	0.60	0.75	0.018	0.024	0.030
L1	1.00 REF.			0.039 REF.		
θ	0	3.5	7	0	3.5	7

DETAIL"A"	EVEN	EVEN	ODD	EVEN	EVEN
1 b ±0.03	0.37	0.32	0.22	0.18	0.18
1 b1±0.03	0.35	0.30	0.20	0.16	0.16
e (BSC)	0.80	0.65	0.50	0.40	0.40
N	64L	80L	100L	120L	128L
JEDEC	MS-026 BEB	MS-026 BEC	MS-026 BED	MS-026 BEE	

Figure 28. Optional 128-Pin LQFP Package

Acronyms and Glossary

BIU	Bus Interface Unit	The host interface function that performs code conversion, buffering, and the like required for communications to and from a network.
BPDU	Bridge Protocol Data Unit	A packet containing ports, addresses, etc. to make sure data being passed through a bridged network arrives at its proper destination.
CMOS	Complementary Metal Oxide Semiconductor	A common semiconductor manufacturing technique in which positive and negative types of transistors are combined to form a current gate that in turn forms an effective means of controlling electrical current through a chip.
CRC	Cyclic Redundancy Check	A common technique for detecting data transmission errors. CRC for Ethernet is 32 bits long.
Cut-through switch		A switch typically processes received packets by reading in the full packet (storing), then processing the packet to determine where it needs to go, then forwarding it. A cut-through switch simply reads in the first bit of an incoming packet and forwards the packet. Cut-through switches do not store the packet.
DA	Destination Address	The address to send packets.
DMA	Direct Memory Access	A design in which memory on a chip is controlled independently of the CPU.
EEPROM	Electronically Erasable Programmable Read-only Memory	A design in which memory on a chip can be erased by exposing it to an electrical charge.
EISA	Extended Industry Standard Architecture	A bus architecture designed for PCs using 80x86 processors, or an Intel 80386, 80486 or Pentium microprocessor. EISA buses are 32 bits wide and support multiprocessing.
EMI	Electro-Magnetic Interference	A naturally occurring phenomena when the electromagnetic field of one device disrupts, impedes or degrades the electromagnetic field of another device by coming into proximity with it. In computer technology, computer devices are susceptible to EMI because electromagnetic fields are a byproduct of passing electricity through a wire. Data lines that have not been properly shielded are susceptible to data corruption by EMI.
FCS	Frame Check Sequence	See CRC.
FID	Frame or Filter ID	Specifies the frame identifier. Alternately is the filter identifier.
IGMP	Internet Group Management Protocol	The protocol defined by RFC 1112 for IP multicast transmissions.
IPG	Inter-Packet Gap	A time delay between successive data packets mandated by the network standard for protocol reasons. In Ethernet, the medium has to be "silent" (i.e., no data transfer) for a short period of time before a node can consider the network idle and start to transmit. IPG is used to correct timing differences between a transmitter and receiver. During the IPG, no data is transferred, and information in the gap can be discarded or additions inserted without impact on data integrity.
ISI	Inter-Symbol Interference	The disruption of transmitted code caused by adjacent pulses affecting or interfering with each other.
ISA	Industry Standard Architecture	A bus architecture used in the IBM PC/XT and PC/AT.
Jumbo Packet		A packet larger than the standard Ethernet packet (1500 bytes). Large packet sizes allow for more efficient use of bandwidth, lower overhead, less processing, etc.
MDI	Medium Dependent Interface	An Ethernet port connection that allows network hubs or switches to connect to other hubs or switches without a null-modem, or crossover,

		cable. MDI provides the standard interface to a particular media (copper or fiber) and is therefore 'media dependent.'
MDI-X	Medium Dependent Interface Crossover	An Ethernet port connection that allows networked end stations (i.e., PCs or workstations) to connect to each other using a null-modem, or crossover, cable. For 10/100 full-duplex networks, an end point (such as a computer) and a switch are wired so that each transmitter connects to the far end receiver. When connecting two computers together, a cable that crosses the TX and RX is required to do this. With auto MDI-X, the PHY senses the correct TX and RX roles, eliminating any cable confusion.
MIB	Management Information Base	The MIB comprises the management portion of network devices. This can include things like monitoring traffic levels and faults (statistical), and can also change operating parameters in network nodes (static forwarding addresses).
MII	Media Independent Interface	The MII accesses PHY registers as defined in the IEEE 802.3 specification.
NIC	Network Interface Card	An expansion board inserted into a computer to allow it to be connected to a network. Most NICs are designed for a particular type of network, protocol, and media, although some can serve multiple networks.
NPVID	Non Port VLAN ID	The Port VLAN ID value is used as a VLAN reference.
PLL	Phase-Locked Loop	An electronic circuit that controls an oscillator so that it maintains a constant phase angle (i.e., lock) on the frequency of an input, or reference, signal. A PLL ensures that a communication signal is locked on a specific frequency and can also be used to generate, modulate, and demodulate a signal and divide a frequency.
PME	Power Management Event	An occurrence that affects the directing of power to different components of a system.
QMU	Queue Management Unit	Manages packet traffic between MAC/PHY interface and the system host. The QMU has built-in packet memories for receive and transmit functions called TXQ (Transmit Queue) and RXQ (Receive Queue).
SA	Source Address	The address from which information has been sent.
TDR	Time Domain Reflectometry	TDR is used to pinpoint flaws and problems in underground and aerial wire, cabling, and fiber optics. They send a signal down the conductor and measure the time it takes for the signal -- or part of the signal -- to return.
UTP	Unshielded Twisted Pair	Commonly a cable containing 4 twisted pairs of wires. The wires are twisted in such a manner as to cancel electrical interference generated in each wire, therefore shielding is not required.
VLAN	Virtual Local Area Network	A configuration of computers that acts as if all computers are connected by the same physical network but which may be located virtually anywhere.

MICREL, INC. 1849 FORTUNE DRIVE SAN JOSE, CA 95131 USA

TEL +1 (408) 944-0800 FAX +1 (408) 474-1000 WEB http://www.micrel.com

The information furnished by Micrel in this data sheet is believed to be accurate and reliable. However, no responsibility is assumed by Micrel for its use. Micrel reserves the right to change circuitry and specifications at any time without notification to the customer.

Micrel Products are not designed or authorized for use as components in life support appliances, devices or systems where malfunction of a product can reasonably be expected to result in personal injury. Life support devices or systems are devices or systems that (a) are intended for surgical implant into the body or (b) support or sustain life, and whose failure to perform can be reasonably expected to result in a significant injury to the user. A Purchaser's use or sale of Micrel Products for use in life support appliances, devices or systems is a Purchaser's own risk and Purchaser agrees to fully indemnify Micrel for any damages resulting from such use or sale.

© 2005 Micrel, Incorporated.