BGA3022

1.2 GHz 18 dB gain CATV amplifier

Rev. 2 — 25 February 2015 Product data sheet

1. Product profile

1.1 General description

The BGA3022 MMIC is a dual wideband amplifier with internal biasing. It is a Medium Power Amplifier (MPA), specifically designed as an output stage for high linearity CATV optical mini- and midi-nodes, operating over a frequency range of 40 MHz to 1200 MHz.

The MPA is housed in a lead free 8-pin HSO8 package.

1.2 Features and benefits

- Internally biased
- Frequency range of 40 MHz to 1200 MHz
- High linearity with an $IP3_O$ of 47 dBm and an $IP2_O$ of 85 dBm
- Operating from 5 V to 8 V supply
- High gain output 1dB compression point of 30 dBm
- 75 Ω input and output impedance
- $I_{CC(tot)}$ can be controlled between 175 mA and 350 mA
- Integrated feedback

1.3 Applications

- CATV infrastructure network medium power output stage in optical nodes (FTTx), distribution amplifiers, trunk amplifiers and line extenders

1.4 Quick reference data

Table 1. Quick reference data

T_{amb} = 25 °C; typical values at V_{CC} = 8 V; $Z_S = Z_L$ = 75 Ω; input and output connected with 1:1 balun, $V_{I(CTRL)}$ = 3.3 V or open (maximum total supply current); 40 MHz ≤ f_1 ≤ 1200 MHz unless otherwise specified.

Symbol	Parameter	Conditions	Min	Typ	Max	Unit
V_{CC}	supply voltage	RF input AC coupled	7.6	8.0	8.4	V
$I_{CC(tot)}$	total supply current		175	350	-	mA
T_{amb}	ambient temperature		–40	-	+85	°C
$P_{L(1dB)}$	output power at 1 dB gain compression		-	30	-	dBm
$IP3_O$	output third-order intercept point	[1]	-	47	-	dBm
$IP2_O$	output second-order intercept point	[2]	-	85	-	dBm

[1] Fundamental frequency f_1 = 500 MHz, fundamental frequency f_2 = 501 MHz. The intermodulation product (IM3) is measured at $2 \times f_1 - f_2$ = 499 MHz. The output power of the fundamental frequencies is 10 dBm per frequency.

[2] Fundamental frequency f_1 = 240 MHz, fundamental frequency f_2 = 260 MHz. The intermodulation product (IM2) is measured at $f_1 + f_2$ = 500 MHz. The output power of the fundamental frequencies is 10 dBm per frequency.

2. Pinning information

2.1 Pinning

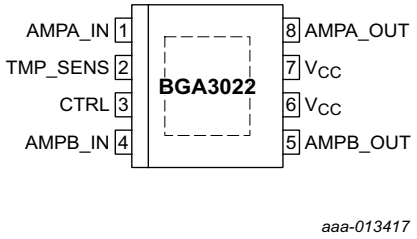

Fig 1. Pin configuration for SOT786-2

2.2 Pin description

Table 2. Pin description

Symbol	Pin	Description
AMPA_IN	1	input amplifier A
TMP_SENS	2	temperature sense
CTRL	3	total supply current control
AMPB_IN	4	input amplifier B
AMPB_OUT	5	output amplifier B [1]
V_{CC}	6	supply [1]
V_{CC}	7	supply [1]
AMPA_OUT	8	output amplifier A [1]
GND	exposed die pad [2]	ground

[1] See Figure 2 for correct connection.

[2] The center metal base of the HSO8 also functions as heatsink for the power amplifier.

3. Ordering information

Table 3. Ordering information

Type number	Package		
	Name	Description	Version
BGA3022	HSO8	plastic thermal enhanced small outline package; 8 leads; body width 3.9 mm; exposed die pad	SOT786-2

All information provided in this document is subject to legal disclaimers.

© NXP Semiconductors N.V. 2015. All rights reserved.

4. Limiting values

Table 4. Limiting values

In accordance with the Absolute Maximum Rating System (IEC 60134).

Symbol	Parameter	Conditions	Min	Max	Unit
V_{CC}	supply voltage	RF input AC coupled	–0.6	+12	V
$V_{I(CTRL)}$	input voltage on pin CTRL		–0.6	+8	V
$V_{I(TMP_SENS)}$	input voltage on pin TMP_SENS		–0.6	+8	V
P_i	input power	single tone; on balun [1]	-	20	dBm
T_{stg}	storage temperature		–65	+150	°C
T_j	junction temperature		-	150	°C
T_{amb}	ambient temperature		–40	+85	°C
V_{ESD}	electrostatic discharge voltage	Human Body Model (HBM); According JEDEC standard 22-A114E	2	-	kV
		Charged Device Model (CDM); According JEDEC standard 22-C101B	500	-	V

[1] P_i = 17 dBm on AMPA_IN (pin 1) and AMPB_IN (pin 4).

5. Thermal characteristics

Table 5. Thermal characteristics

Symbol	Parameter	Conditions	Typ	Unit
$R_{th(j-c)}$	thermal resistance from junction to case	[1][2]	15	K/W

[1] Case is ground solder pad.

[2] Thermal resistance measured using infrared measurement technique, device mounted on application board and placed in still air.

All information provided in this document is subject to legal disclaimers.

© NXP Semiconductors N.V. 2015. All rights reserved.

6. Characteristics

Table 6. Characteristics at V_{CC} = 8 V; I_{CC} = 350 mA

T_{amb} = 25 °C; typical values at V_{CC} = 8 V; $Z_S = Z_L$ = 75 Ω; input and output connected with 1:1 balun, $V_{I(CTRL)}$ = 3.3 V or open (maximum total supply current); 40 MHz ≤ f_1 ≤ 1200 MHz unless otherwise specified.

Symbol	Parameter	Conditions	Min	Typ	Max	Unit
V_{CC}	supply voltage	RF input AC coupled	7.6	8.0	8.4	V
$I_{CC(tot)}$	total supply current		-	350	-	mA
$\|s_{21}\|^2$	insertion power gain	f = 40 MHz	-	18	-	dB
SL_{sl}	slope straight line		-	–1.9	-	dB
FL	flatness of frequency response	[1]	-	0.25	-	dB
$P_{L(1dB)}$	output power at 1 dB gain compression		-	30	-	dBm
$IP3_O$	output third-order intercept point	[2]	-	47	-	dBm
$IP2_O$	output second-order intercept point	[3]	-	85	-	dBm
CTB	composite triple beat	V_O = 43 dBmV [4]	-	–65	-	dBc
CSO	composite second-order distortion	V_O = 43 dBmV [4]	-	–75	-	dBc
NF	noise figure	f = 500 MHz	-	5.1	-	dB
RL_{in}	input return loss	f = 40 MHz to 80 MHz	-	–18	-	dB
		f = 80 MHz to 160 MHz	-	–19	-	dB
		f = 160 MHz to 320 MHz	-	–19	-	dB
		f = 320 MHz to 640 MHz	-	–19	-	dB
		f = 640 MHz to 1000 MHz	-	–19	-	dB
		f = 1000 MHz to 1200 MHz	-	–15	-	dB
RL_{out}	output return loss	f = 40 MHz to 80 MHz	-	–18	-	dB
		f = 80 MHz to 160 MHz	-	–20	-	dB
		f = 160 MHz to 320 MHz	-	–18	-	dB
		f = 320 MHz to 640 MHz	-	–17	-	dB
		f = 640 MHz to 1000 MHz	-	–17	-	dB
		f = 1000 MHz to 1200 MHz	-	–15	-	dB

[1] Flatness is defined as peak deviation to straight line.

[2] Fundamental frequency f_1 = 500 MHz, fundamental frequency f_2 = 501 MHz. The intermodulation product (IM3) is measured at $2 \times f_1 - f_2$ = 499 MHz. The output power of the fundamental frequencies is 10 dBm per frequency.

[3] Fundamental frequency f_1 = 240 MHz, fundamental frequency f_2 = 260 MHz. The intermodulation product (IM2) is measured at $f_1 + f_2$ = 500 MHz. The output power of the fundamental frequencies is 10 dBm per frequency.

[4] Measured with 79 NTSC channels.

All information provided in this document is subject to legal disclaimers.

© NXP Semiconductors N.V. 2015. All rights reserved.

Table 7. Characteristics at V_{CC} = 8 V; I_{CC} = 175 mA

T_{amb} = 25 °C; typical values at V_{CC} = 8 V; Z_S = Z_L = 75 Ω; input and output connected with 1:1 balun, $V_{I(CTRL)}$ = 0 V (minimum total supply current); 40 MHz ≤ f_1 ≤ 1200 MHz unless otherwise specified.

Symbol	Parameter	Conditions	Min	Typ	Max	Unit
V_{CC}	supply voltage	RF input AC coupled	7.6	8.0	8.4	V
$I_{CC(tot)}$	total supply current		-	175	-	mA
$\|S_{21}\|^2$	insertion power gain	f = 40 MHz	-	18	-	dB
SL_{sl}	slope straight line		-	–2.2	-	dB
FL	flatness of frequency response	[1]	-	0.35	-	dB
$P_{L(1dB)}$	output power at 1 dB gain compression		-	24	-	dBm
$IP3_O$	output third-order intercept point	[2]	-	38	-	dBm
$IP2_O$	output second-order intercept point	[3]	-	69	-	dBm
CTB	composite triple beat	V_O = 35 dBmV [4]	-	–66	-	dBc
CSO	composite second-order distortion	V_O = 35 dBmV [4]	-	–75	-	dBc
NF	noise figure	f = 500 MHz	-	3.8	-	dB
RL_{in}	input return loss	f = 40 MHz to 80 MHz	-	–20	-	dB
		f = 80 MHz to 160 MHz	-	–20	-	dB
		f = 160 MHz to 320 MHz	-	–19	-	dB
		f = 320 MHz to 640 MHz	-	–19	-	dB
		f = 640 MHz to 1000 MHz	-	–18	-	dB
		f = 1000 MHz to 1200 MHz	-	–14	-	dB
RL_{out}	output return loss	f = 40 MHz to 80 MHz	-	–23	-	dB
		f = 80 MHz to 160 MHz	-	–21	-	dB
		f = 160 MHz to 320 MHz	-	–18	-	dB
		f = 320 MHz to 640 MHz	-	–17	-	dB
		f = 640 MHz to 1000 MHz	-	–15	-	dB
		f = 1000 MHz to 1200 MHz	-	–12	-	dB

[1] Flatness is defined as peak deviation to straight line.

[2] Fundamental frequency f_1 = 500 MHz, fundamental frequency f_2 = 501 MHz. The intermodulation product (IM3) is measured at $2 \times f_1 - f_2$ = 499 MHz. The output power of the fundamental frequencies is 10 dBm per frequency.

[3] Fundamental frequency f_1 = 240 MHz, fundamental frequency f_2 = 260 MHz. The intermodulation product (IM2) is measured at $f_1 + f_2$ = 500 MHz. The output power of the fundamental frequencies is 10 dBm per frequency.

[4] Measured with 79 NTSC channels.

All information provided in this document is subject to legal disclaimers.

© NXP Semiconductors N.V. 2015. All rights reserved.

Table 8. Characteristics at V_{CC} = 5 V; I_{CC} = 165 mA

T_{amb} = 25 °C; typical values at V_{CC} = 5 V; Z_S = Z_L = 75 Ω; input and output connected with 1:1 balun, $V_{I(CTRL)}$ = 0 V (minimum total supply current); 40 MHz ≤ f_1 ≤ 1200 MHz unless otherwise specified.

Symbol	Parameter	Conditions	Min	Typ	Max	Unit
V_{CC}	supply voltage	RF input AC coupled	4.75	5.00	5.25	V
$I_{CC(tot)}$	total supply current		-	165	-	mA
$\|s_{21}\|^2$	insertion power gain	f = 40 MHz	-	18	-	dB
SL_{sl}	slope straight line		-	–2.2	-	dB
FL	flatness of frequency response	[1]	-	0.35	-	dB
$P_{L(1dB)}$	output power at 1 dB gain compression		-	24	-	dBm
$IP3_O$	output third-order intercept point	[2]	-	38	-	dBm
$IP2_O$	output second-order intercept point	[3]	-	71	-	dBm
CTB	composite triple beat	V_O = 35 dBmV [4]	-	–66	-	dBc
CSO	composite second-order distortion	V_O = 35 dBmV [4]	-	–75	-	dBc
NF	noise figure	f = 500 MHz	-	3.8	-	dB
RL_{in}	input return loss	f = 40 MHz to 80 MHz	-	–20	-	dB
		f = 80 MHz to 160 MHz	-	–20	-	dB
		f = 160 MHz to 320 MHz	-	–19	-	dB
		f = 320 MHz to 640 MHz	-	–19	-	dB
		f = 640 MHz to 1000 MHz	-	–18	-	dB
		f = 1000 MHz to 1200 MHz	-	–14	-	dB
RL_{out}	output return loss	f = 40 MHz to 80 MHz	-	–23	-	dB
		f = 80 MHz to 160 MHz	-	–21	-	dB
		f = 160 MHz to 320 MHz	-	–18	-	dB
		f = 320 MHz to 640 MHz	-	–17	-	dB
		f = 640 MHz to 1000 MHz	-	–17	-	dB
		f = 1000 MHz to 1200 MHz	-	–13	-	dB

[1] Flatness is defined as peak deviation to straight line.

[2] Fundamental frequency f_1 = 500 MHz, fundamental frequency f_2 = 501 MHz. The intermodulation product (IM3) is measured at $2 \times f_1 - f_2$ = 499 MHz. The output power of the fundamental frequencies is 10 dBm per frequency.

[3] Fundamental frequency f_1 = 240 MHz, fundamental frequency f_2 = 260 MHz. The intermodulation product (IM2) is measured at $f_1 + f_2$ = 500 MHz. The output power of the fundamental frequencies is 10 dBm per frequency.

[4] Measured with 79 NTSC channels.

All information provided in this document is subject to legal disclaimers.

© NXP Semiconductors N.V. 2015. All rights reserved.

7. Application information

The BGA3022 can be used in other applications. Please contact your local sales representative for more information. Application notes are available on the NXP website.

7.1 Application board

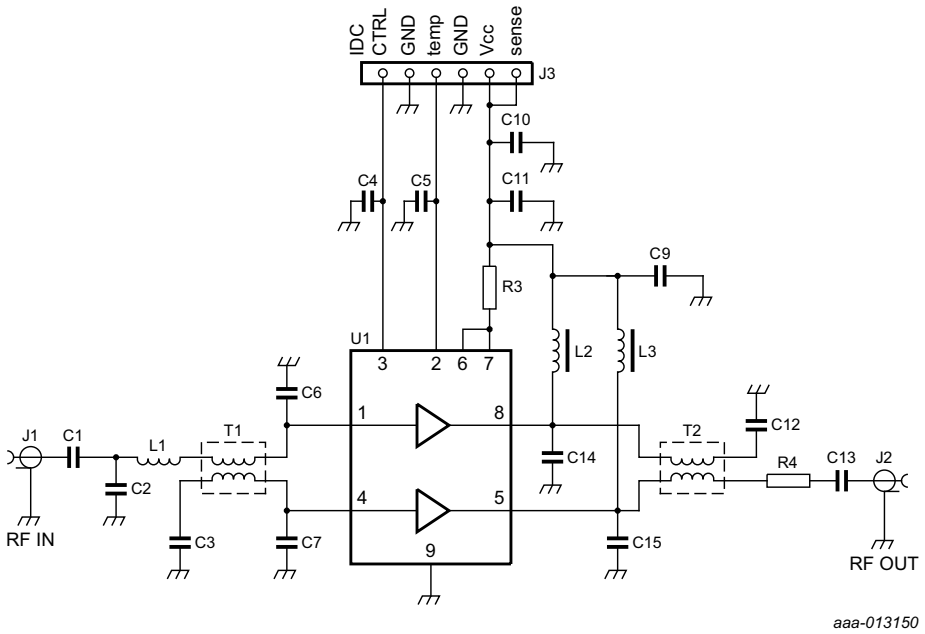

See Table 9 for list of components.

Fig 2. Circuit MPA only evaluation board

All information provided in this document is subject to legal disclaimers.

© NXP Semiconductors N.V. 2015. All rights reserved.

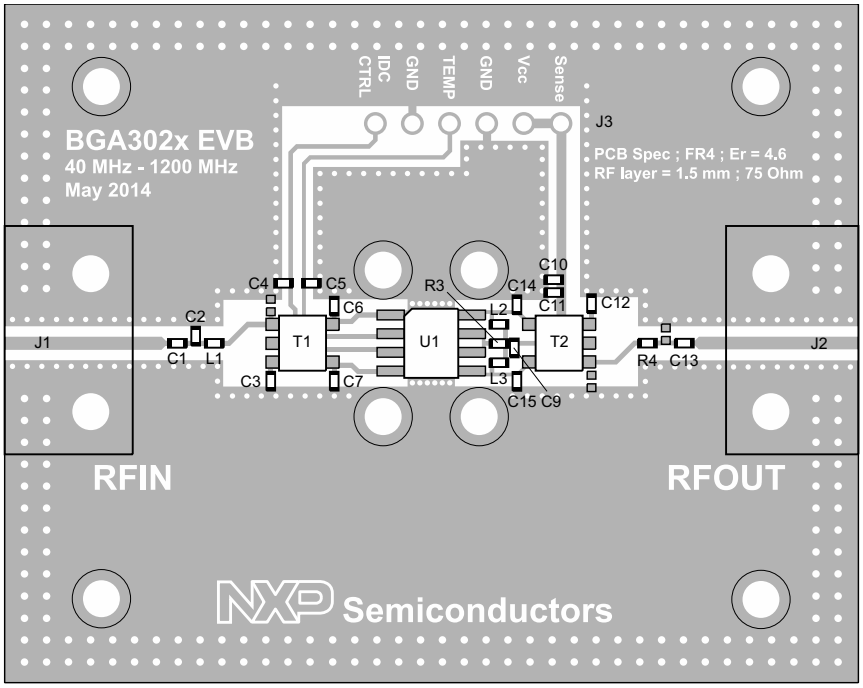

aaa-013151

See Table 9 for list of components.

Fig 3. Printed-Circuit Board (PCB) layout MPA only evaluation board

Table 9. List of components

See Figure 2 for schematics and Figure 3 for Printed-Circuit Board (PCB).

Component	Description	Value	Remarks
C1, C3, C4, C5, C9, C11, C12, C13	capacitor	10 nF	Murata GRM155R71E103KA01D
C2	capacitor	0.47 pF	Phycomp 2238 869 14477
C10	capacitor	100 nF	Murata GRM155R61A104KA01D
C6, C7, C14, C15	capacitor	1 pF	Murata GRM1555C1H1R0CA01D
J1, J2	F-connector	75 Ω	Bomar 861V509ER6
J3	header 6-pin	-	Molex 22-29-2061
L1	SMD inductor	1.0 nH	Murata LQG15HS1N0S02D
L2, L3	choke	-	Murata BLM15HD182SN1D
R3	chip resistor	15 Ω	Yageo RC0402FR-0715RL
R4	chip resistor	0 Ω	Murata RC0402JR-070RL
T1	balun transformer	-	MACOM MABA-007159-000000
T2	balun transformer	-	MACOM MABA-010245-CT1160
U1	BGA3022	-	NXP

All information provided in this document is subject to legal disclaimers.

© NXP Semiconductors N.V. 2015. All rights reserved.

SOT768-2

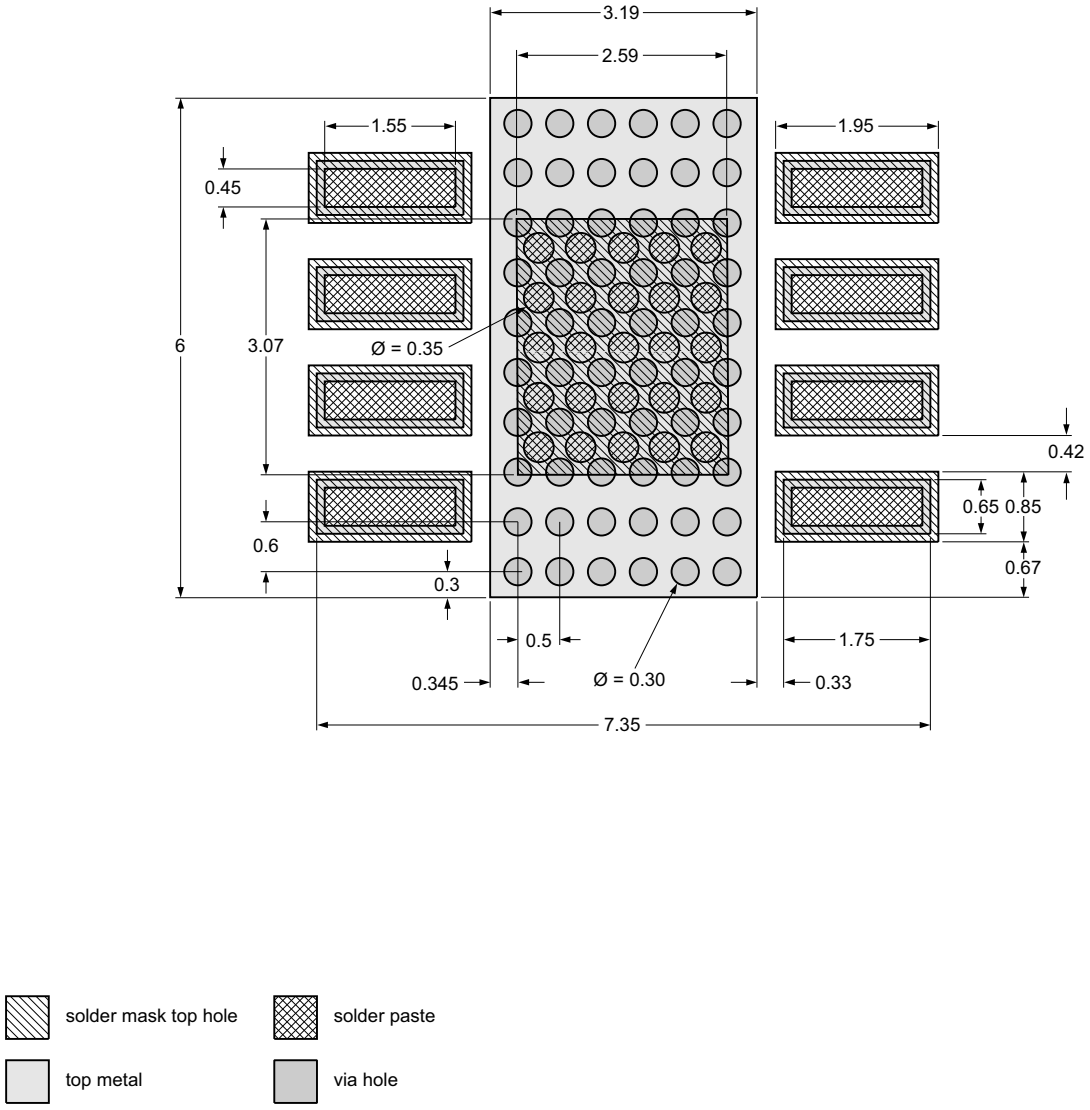

Fig 4. Recommended Printed-Circuit Board (PCB) footprint

All information provided in this document is subject to legal disclaimers.

© NXP Semiconductors N.V. 2015. All rights reserved.

8. Package outline

HSO8: plastic thermal enhanced small outline package; 8 leads; body width 3.9 mm; exposed die pad

SOT786-2

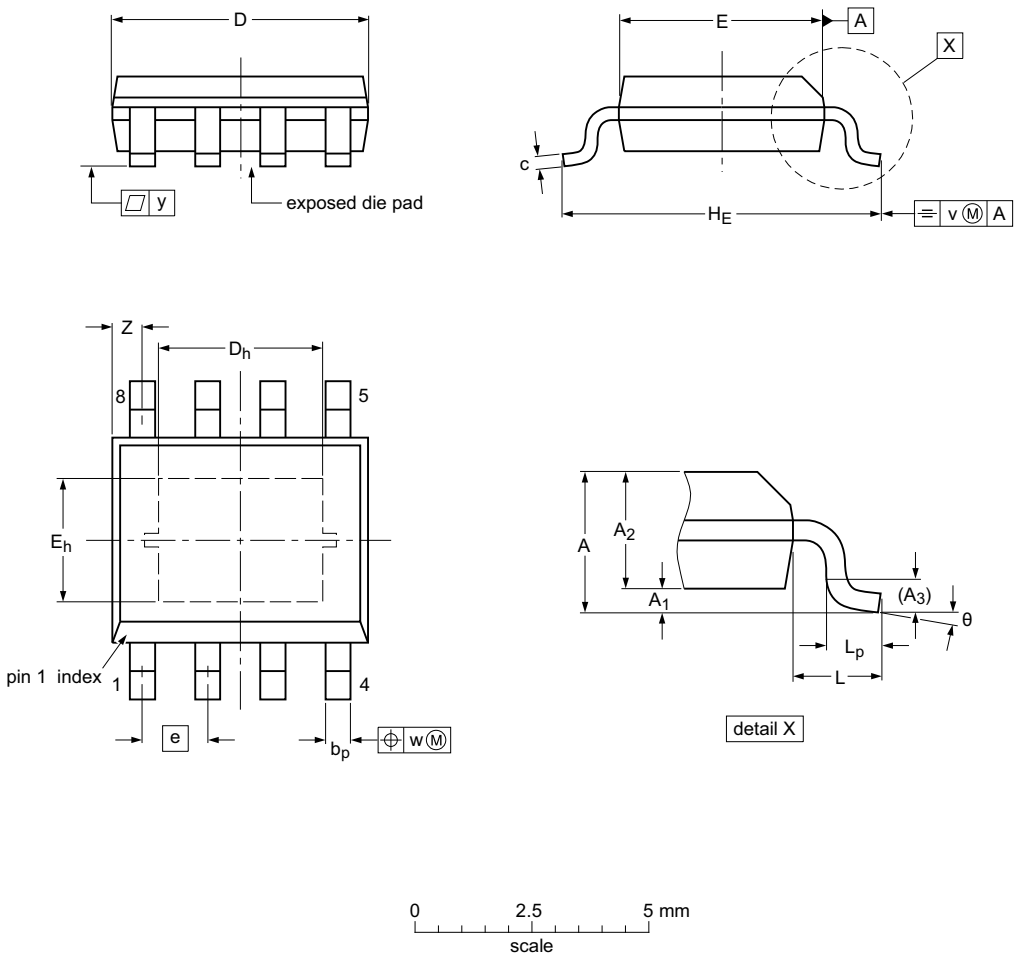

Dimensions (mm are the original dimensions)

Unit		A	A_1	A_2	A_3	b_p	c	$D^{(1)}$	D_h	$E^{(2)}$	E_h	e	H_E	L	L_p	v	w	y	$Z^{(1)}$	θ
mm	max		0.1	1.6		0.49	0.25	5.0	3.17	4.0	2.49		6.2		1.0				0.8	8°
	nom	1.7			0.25							1.27		1.05		0.25	0.25	0.1		
	min		0.0	1.4		0.36	0.19	4.8	2.97	3.8	2.29		5.8		0.4				0.3	0°

Note
1. Plastic or metal protrusions of 0.15 mm maximum per side are not included.
2. Plastic or metal protrusions of 0.25 mm maximum per side are not included.

sot786-2_po

Outline version	References				European projection	Issue date
	IEC	JEDEC	JEITA			
SOT786-2						~~13-08-02~~ 14-05-27

Fig 5. Package outline SOT786-2 (HSO8)

All information provided in this document is subject to legal disclaimers.

© NXP Semiconductors N.V. 2015. All rights reserved.

9. Abbreviations

Table 10. Abbreviations

Acronym	Description
CATV	Community Antenna TeleVision
FTTx	Fiber To The “x”
MMIC	Monolithic Microwave Integrated Circuit
MPA	Medium Power Amplifier
SMD	Surface Mounted Device

10. Revision history

Table 11. Revision history

Document ID	Release date	Data sheet status	Change notice	Supersedes
BGA3022 v.2	20150225	Product data sheet	-	BGA3022 v.1
BGA3022 v.1	20141128	Preliminary data sheet	-	-

All information provided in this document is subject to legal disclaimers.

© NXP Semiconductors N.V. 2015. All rights reserved.

11. Legal information

11.1 Data sheet status

Document status[1][2]	Product status[3]	Definition
Objective [short] data sheet	Development	This document contains data from the objective specification for product development.
Preliminary [short] data sheet	Qualification	This document contains data from the preliminary specification.
Product [short] data sheet	Production	This document contains the product specification.

[1] Please consult the most recently issued document before initiating or completing a design.

[2] The term 'short data sheet' is explained in section "Definitions".

[3] The product status of device(s) described in this document may have changed since this document was published and may differ in case of multiple devices. The latest product status information is available on the Internet at URL http://www.nxp.com.

11.2 Definitions

Draft — The document is a draft version only. The content is still under internal review and subject to formal approval, which may result in modifications or additions. NXP Semiconductors does not give any representations or warranties as to the accuracy or completeness of information included herein and shall have no liability for the consequences of use of such information.

Short data sheet — A short data sheet is an extract from a full data sheet with the same product type number(s) and title. A short data sheet is intended for quick reference only and should not be relied upon to contain detailed and full information. For detailed and full information see the relevant full data sheet, which is available on request via the local NXP Semiconductors sales office. In case of any inconsistency or conflict with the short data sheet, the full data sheet shall prevail.

Product specification — The information and data provided in a Product data sheet shall define the specification of the product as agreed between NXP Semiconductors and its customer, unless NXP Semiconductors and customer have explicitly agreed otherwise in writing. In no event however, shall an agreement be valid in which the NXP Semiconductors product is deemed to offer functions and qualities beyond those described in the Product data sheet.

11.3 Disclaimers

Limited warranty and liability — Information in this document is believed to be accurate and reliable. However, NXP Semiconductors does not give any representations or warranties, expressed or implied, as to the accuracy or completeness of such information and shall have no liability for the consequences of use of such information. NXP Semiconductors takes no responsibility for the content in this document if provided by an information source outside of NXP Semiconductors.

In no event shall NXP Semiconductors be liable for any indirect, incidental, punitive, special or consequential damages (including - without limitation - lost profits, lost savings, business interruption, costs related to the removal or replacement of any products or rework charges) whether or not such damages are based on tort (including negligence), warranty, breach of contract or any other legal theory.

Notwithstanding any damages that customer might incur for any reason whatsoever, NXP Semiconductors' aggregate and cumulative liability towards customer for the products described herein shall be limited in accordance with the *Terms and conditions of commercial sale* of NXP Semiconductors.

Right to make changes — NXP Semiconductors reserves the right to make changes to information published in this document, including without limitation specifications and product descriptions, at any time and without notice. This document supersedes and replaces all information supplied prior to the publication hereof.

Suitability for use — NXP Semiconductors products are not designed, authorized or warranted to be suitable for use in life support, life-critical or safety-critical systems or equipment, nor in applications where failure or malfunction of an NXP Semiconductors product can reasonably be expected to result in personal injury, death or severe property or environmental damage. NXP Semiconductors and its suppliers accept no liability for inclusion and/or use of NXP Semiconductors products in such equipment or applications and therefore such inclusion and/or use is at the customer's own risk.

Applications — Applications that are described herein for any of these products are for illustrative purposes only. NXP Semiconductors makes no representation or warranty that such applications will be suitable for the specified use without further testing or modification.

Customers are responsible for the design and operation of their applications and products using NXP Semiconductors products, and NXP Semiconductors accepts no liability for any assistance with applications or customer product design. It is customer's sole responsibility to determine whether the NXP Semiconductors product is suitable and fit for the customer's applications and products planned, as well as for the planned application and use of customer's third party customer(s). Customers should provide appropriate design and operating safeguards to minimize the risks associated with their applications and products.

NXP Semiconductors does not accept any liability related to any default, damage, costs or problem which is based on any weakness or default in the customer's applications or products, or the application or use by customer's third party customer(s). Customer is responsible for doing all necessary testing for the customer's applications and products using NXP Semiconductors products in order to avoid a default of the applications and the products or of the application or use by customer's third party customer(s). NXP does not accept any liability in this respect.

Limiting values — Stress above one or more limiting values (as defined in the Absolute Maximum Ratings System of IEC 60134) will cause permanent damage to the device. Limiting values are stress ratings only and (proper) operation of the device at these or any other conditions above those given in the Recommended operating conditions section (if present) or the Characteristics sections of this document is not warranted. Constant or repeated exposure to limiting values will permanently and irreversibly affect the quality and reliability of the device.

Terms and conditions of commercial sale — NXP Semiconductors products are sold subject to the general terms and conditions of commercial sale, as published at http://www.nxp.com/profile/terms, unless otherwise agreed in a valid written individual agreement. In case an individual agreement is concluded only the terms and conditions of the respective agreement shall apply. NXP Semiconductors hereby expressly objects to applying the customer's general terms and conditions with regard to the purchase of NXP Semiconductors products by customer.

No offer to sell or license — Nothing in this document may be interpreted or construed as an offer to sell products that is open for acceptance or the grant, conveyance or implication of any license under any copyrights, patents or other industrial or intellectual property rights.

All information provided in this document is subject to legal disclaimers.

© NXP Semiconductors N.V. 2015. All rights reserved.

Export control — This document as well as the item(s) described herein may be subject to export control regulations. Export might require a prior authorization from competent authorities.

Quick reference data — The Quick reference data is an extract of the product data given in the Limiting values and Characteristics sections of this document, and as such is not complete, exhaustive or legally binding.

Non-automotive qualified products — Unless this data sheet expressly states that this specific NXP Semiconductors product is automotive qualified, the product is not suitable for automotive use. It is neither qualified nor tested in accordance with automotive testing or application requirements. NXP Semiconductors accepts no liability for inclusion and/or use of non-automotive qualified products in automotive equipment or applications.

In the event that customer uses the product for design-in and use in automotive applications to automotive specifications and standards, customer (a) shall use the product without NXP Semiconductors' warranty of the product for such automotive applications, use and specifications, and (b) whenever customer uses the product for automotive applications beyond NXP Semiconductors' specifications such use shall be solely at customer's own risk, and (c) customer fully indemnifies NXP Semiconductors for any liability, damages or failed product claims resulting from customer design and use of the product for automotive applications beyond NXP Semiconductors' standard warranty and NXP Semiconductors' product specifications.

Translations — A non-English (translated) version of a document is for reference only. The English version shall prevail in case of any discrepancy between the translated and English versions.

11.4 Trademarks

Notice: All referenced brands, product names, service names and trademarks are the property of their respective owners.

12. Contact information

For more information, please visit: **http://www.nxp.com**

For sales office addresses, please send an email to: **salesaddresses@nxp.com**

All information provided in this document is subject to legal disclaimers.

© NXP Semiconductors N.V. 2015. All rights reserved.

13. Contents

1 Product profile 1
1.1 General description 1
1.2 Features and benefits 1
1.3 Applications 1
1.4 Quick reference data 1
2 Pinning information 2
2.1 Pinning 2
2.2 Pin description 2
3 Ordering information 2
4 Limiting values 3
5 Thermal characteristics 3
6 Characteristics 4
7 Application information 7
7.1 Application board 7
8 Package outline 10
9 Abbreviations 11
10 Revision history 11
11 Legal information 12
11.1 Data sheet status 12
11.2 Definitions 12
11.3 Disclaimers 12
11.4 Trademarks 13
12 Contact information 13
13 Contents 14

Please be aware that important notices concerning this document and the product(s) described herein, have been included in section 'Legal information'.

© NXP Semiconductors N.V. 2015. All rights reserved.

For more information, please visit: http://www.nxp.com
For sales office addresses, please send an email to: salesaddresses@nxp.com

Date of release: 25 February 2015
Document identifier: BGA3022