Analog, Mixed-Signal and Power Management

MC10XSD200

Dual 10 mΩ high-side switch

Target Applications

- Industrial (12 V and 24 V systems)
- Halogen bulbs
- Light-emitting diodes (LEDs)
- Low-voltage industrial lighting
- DC motors

Overview

The MC10XSD200 device is part of a 36 V high-side switch product family with integrated control and a high number of protective and diagnostic functions. It is designed for industrial applications. The low $R_{DS(on)}$ channels (< 10 mΩ) can control different load types, including bulb lamps, solenoids or DC motors.

Control, device configuration and diagnostics are performed through a 16-bit serial peripheral interface (SPI), allowing easy integration into existing applications. Both channels can be controlled individually by external or internal clock signals, or by direct inputs. Using the internal clock allows fully autonomous device operation. Programmable output voltage slew rates (individually programmable) help improve electromagnetic compatibility (EMC) performance.

Simplified Application Drawing

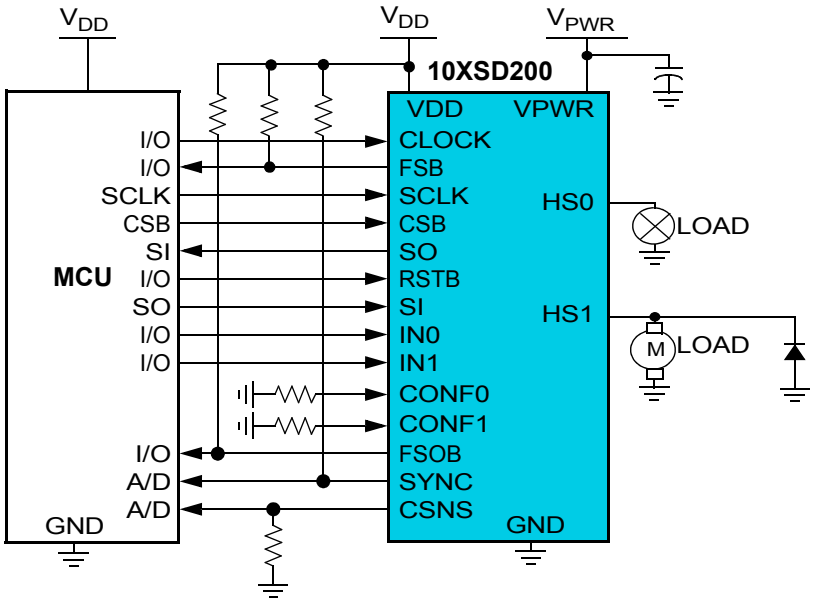

freescale™

This device features a dynamic overcurrent threshold profile in order to avoid shutting off due to inrush current while still being able to closely track the load current. Switching the current of each channel can be sensed with a programmable sensing ratio. Whenever communication with the external MCU is lost, the device enters a fail-safe operation mode, but remains operational, controllable and protected.

Freescale: A Leader in Analog Solutions

Expanding on more than 30 years of innovation, Freescale is a leading provider of high-performance products that use SMARTMOS technology combining digital, power and standard analog functions. Freescale supplies analog and power management ICs that are advancing the automotive, consumer, industrial and networking markets. Analog solutions interface with real-world signals to control and drive for complete embedded systems.

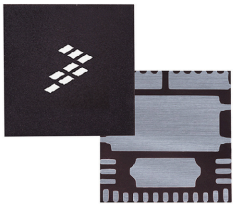

23-pin PQFN (12 x 12 mm)
98ASA00428D

Product Features and Benefits

Features	Benefits
Two fully protected 10 mΩ (@ 25 °C) high-side switches	Offers an intelligent high-side switch for industrial applications
Up to 6 A steady state current per channel	Allows decentralized lighting management (autonomous operation)
Separate bulb and DC motor latched overcurrent handling	Provides a high number of protective and diagnostic functions
Individually programmable internal/external PWM clock signals	Allows user to drive bulb lamps (tungsten filament), LED lights and DC motors
Overcurrent, short-circuit, and overtemperature protection with programmable auto-retry functions	Guarantees full functional and electrical compatibility between family members
Accurate temperature and current sensing	Offers a 16-bit SPI interface for daisy chaining multiple devices
Open load detection (channel in, off and on states) and LED applications (7.0 mA typical)	Allows multiple channel and device current sensing with only one precision resistor
Normal operating range: 8–36 V, extended range: 6–58 V	
3.3 and 5 V compatible 16-bit SPI port for device control, configuration and diagnostics at rates up to 8 MHz	

Performance

Performance	Typical Values
Outputs	2
$R_{DS(on)}$ at 25 °C	Dual 10 mΩ
Operating voltage	8–36 V
Extended operating range	6–58 V
Peak current	77 A
ESD	± 8 kV power I/Os ± 2 kV digital I/Os

Development Tools

Part Number	Description
KIT10XS4200EVBE	Evaluation board, featuring the MC10XS4200

Documentation

Freescale Document Number	Title	Description
MC10XSD200	Dual 10 mΩ High-Side Switch	Data sheet
SG1002	Analog Product Selector Guide	Selector guide
SG200	Analog and Power Management Industrial Selector Guide	Selector guide
AN2467	Power Quad Flat No-Lead Package	Application note
AN4473	Compact Thermal Model Application Note	Application note
AN4474	EMC and Fast Transient Pulses Performances Application Note	Application note
AN4516	IBIS Model Application Note	Application note

For more information, please visit freescale.com/analog

Freescale and the Freescale logo are trademarks of Freescale Semiconductor, Inc., Reg. U.S. Pat. & Tm. Off. SMARTMOS is a trademark of Freescale Semiconductor, Inc. All other product or service names are the property of their respective owners.
© 2013 Freescale Semiconductor, Inc.

Document Number: MC10XSD200FS REV 1