PASTERNACK®
www.pasternack.com

SMB Jack Bulkhead Connector Solder Attachment Thru Hole PCB, .177 inch D Hole

TECHNICAL DATA SHEET PE44123

SMB Jack Bulkhead Connector Solder Attachment Thru Hole PCB, .177 inch D Hole

Configuration

Connector	SMB Jack
Connector Specification	MIL-C-39012
Connector Interface Type	Thru Hole
Cable Attachment Method (Shield/Contact)	Solder
Body Style	Straight
Mount Method	Bulkhead

Electrical Specifications

Impedance, Ohms	50

Mechanical Specifications

Temperature

Operating Range, deg C	-65 to +165

Size

Length, in [mm]	0.64 [16.26]
Width/Dia., in [mm]	0.24 [6.10]
Height, in [mm]	0.24 [6.1]
Weight, lbs [g]	0.004 [1.81]

Connector

Type	SMB Jack
Contact Material and Plating	Gold
Contact Plating Specification	MIL-G-45204
Body Material and Plating	Brass, Gold
Body Plating Specification	MIL-G-45204
Dielectric Type	Teflon

Compliance Certifications (visit www.Pasternack.com for current document)

RoHS Compliant	Yes

Click the following link (or enter part number in “SEARCH” on website) to obtain additional part information including price, inventory and certifications: SMB Jack Bulkhead Connector Solder Attachment Thru Hole PCB, .177 inch D Hole PE44123

The information contained in this document is accurate to the best of our knowledge and representative of the part described herein. It may be necessary to make modifications to the part and/or the documentation of the part, in order to implement improvements. Pasternack reserves the right to make such changes as required. Unless otherwise stated, all specifications are nominal.

Pasternack Enterprises, Inc. • P.O. Box 16759, Irvine, CA 92623
Phone: (866) 727-8376 or (949) 261-1920 • **Fax:** (949) 261-7451
Sales@Pasternack.com • Techsupport@Pasternack.com

ISO 9001 : 2008 Registered

© 2013 Pasternack Enterprises All Rights Reserved

SMB Jack Bulkhead Connector Solder Attachment Thru Hole PCB, .177 inch D Hole

Plotted and Other Data

Notes: Values at 25 °C, sea level

SMB Jack Bulkhead Connector Solder Attachment Thru Hole PCB, .177 inch D Hole from Pasternack Enterprises has same day shipment for domestic and International orders. Our RF, microwave and fiber optic products maintain a 99% availability and are part of the broadest selection in the industry.

Click the following link (or enter part number in “SEARCH” on website) to obtain additional part information including price, inventory and certifications: SMB Jack Bulkhead Connector Solder Attachment Thru Hole PCB, .177 inch D Hole PE44123

URL: http://www.pasternack.com/smb-jack-standard-thru-hole-pcb-connector-pe44123-p.aspx

The information contained in this document is accurate to the best of our knowledge and representative of the part described herein. It may be necessary to make modifications to the part and/or the documentation of the part, in order to implement improvements. Pasternack reserves the right to make such changes as required. Unless otherwise stated, all specifications are nominal.

Pasternack Enterprises, Inc. • P.O. Box 16759, Irvine, CA 92623
Phone: (866) 727-8376 or (949) 261-1920 • **Fax:** (949) 261-7451
Sales@Pasternack.com • Techsupport@Pasternack.com

ISO 9001 : 2008 Registered

© 2013 Pasternack Enterprises All Rights Reserved

PE44123 CAD Drawing

SMB Jack Bulkhead Connector Solder Attachment Thru Hole PCB, .177 inch D Hole

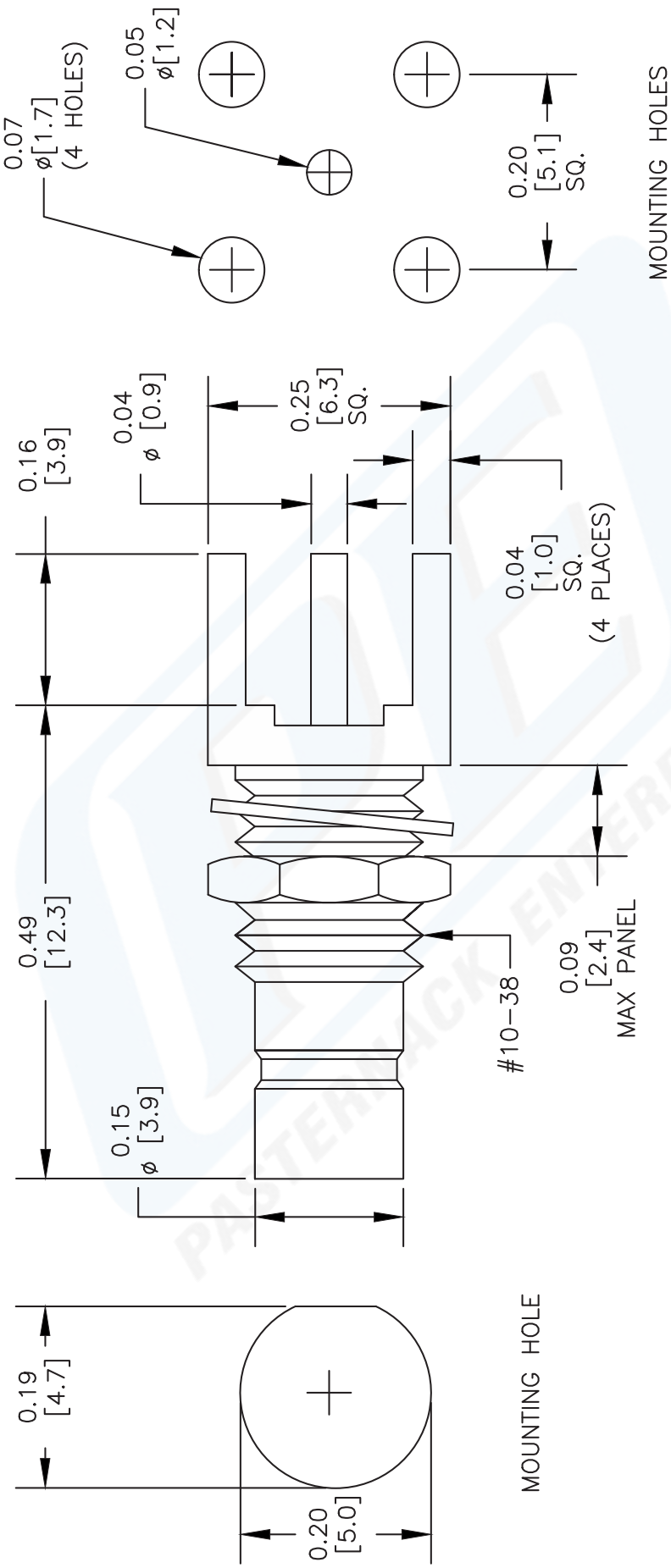

NOTES:
1. UNLESS OTHERWISE SPECIFIED ALL DIMENSIONS ARE NOMINAL.
2. ALL SPECIFICATIONS ARE SUBJECT TO CHANGE WITHOUT NOTICE AT ANY TIME.
3. DIMENSIONS ARE IN INCHES [mm].
4. FITS MIL-C-17 AND EQUIVALENT CABLES.

CAD FILE	070302	SCALE N/A	SIZE A	127

DWG TITLE **PE44123**

FSCM NO. 53919

PASTERNACK®
Pasternack Enterprises, Inc.
P.O. Box 16759 | Irvine | CA | 92623
Phone: (949) 261-1920 | **Fax:** (949) 261-7451
Website: www.pasternack.com | **E-Mail:** sales@pasternack.com

© 2013 Pasternack Enterprises All Rights Reserved