molex
one company › a world of innovation

This document was generated on 05/24/2017

PLEASE CHECK WWW.MOLEX.COM FOR LATEST PART INFORMATION

Part Number: 1041270620

Status: Active

Overview: IllumiMate™ Connector System

Description: IllumiMate™ 1.00mm Pitch Wire-to-Board Header, Surface Mount, Single Row, Vertical, Side Lock, 6 Circuits

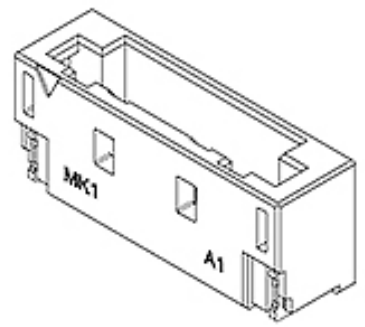

Series image - Reference only

Documents:

Drawing (PDF)
Product Specification PS-104127-004-001 (PDF)
Packaging Specification PK-104127-004-001 (PDF)
RoHS Certificate of Compliance (PDF)

General

Product Family	PCB Headers
Series	104127
Application	Wire-to-Board
Overview	IllumiMate™ Connector System
Product Name	IllumiMate™
UPC	889056135429

Physical

Breakaway	No
Circuits (Loaded)	6
Circuits (maximum)	6
Color - Resin	Natural
Durability (mating cycles max)	30
First Mate / Last Break	No
Glow-Wire Compliant	No
Lock to Mating Part	Yes
Material - Metal	Phosphor Bronze
Material - Plating Mating	Tin over Nickel
Material - Plating Termination	Tin over Nickel
Material - Resin	Liquid Crystal Polymer
Net Weight	0.201/g
Number of Rows	1
Orientation	Vertical
PCB Retention	Yes
Packaging Type	Embossed Tape on Reel
Pitch - Mating Interface	1.00mm
Plating min - Mating	3.000µm
Plating min - Termination	3.000µm
Temperature Range - Operating	-25°C to +130°C
Termination Interface: Style	Surface Mount

Electrical

Current - Maximum per Contact	1.0A
Voltage - Maximum	100V AC (RMS)/DC

Solder Process Data

Duration at Max. Process Temperature (seconds)	010
Lead-freeProcess Capability	REFLOW
Max. Cycles at Max. Process Temperature	001
Process Temperature max. C	260

Material Info

Reference - Drawing Numbers

Packaging Specification	PK-104127-004-001
Product Specification	PS-104127-004-001
Sales Drawing	SD-104127-006, SD-104127-007

EU ELV
Not Relevant

EU RoHS
Compliant

China RoHS

REACH SVHC
Not Contained Per -ED/01/2017 (12 January 2017)

Halogen-Free Status
Not Low-Halogen

Need more information on product environmental compliance?

Email productcompliance@molex.com
Please visit the Contact Us section for any non-product compliance questions.

China ROHS	Green Image
ELV	Not Relevant
RoHS Phthalates	Not Contained

Search Parts in this Series
104127 Series

Mates With
IllumiMate™ Housing 104128-0610

This document was generated on 05/24/2017
PLEASE CHECK WWW.MOLEX.COM FOR LATEST PART INFORMATION